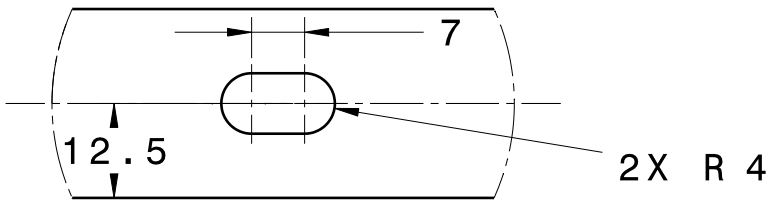


Detail A
Scale: 1:1

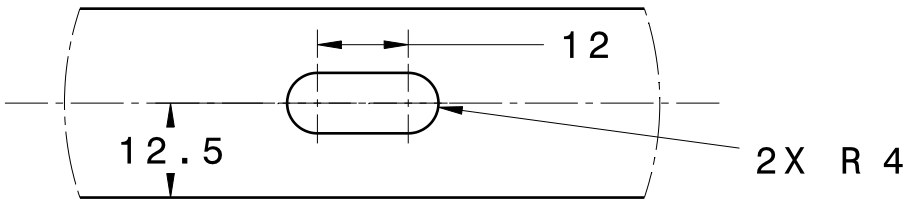


3X Detail B
Scale: 1:1

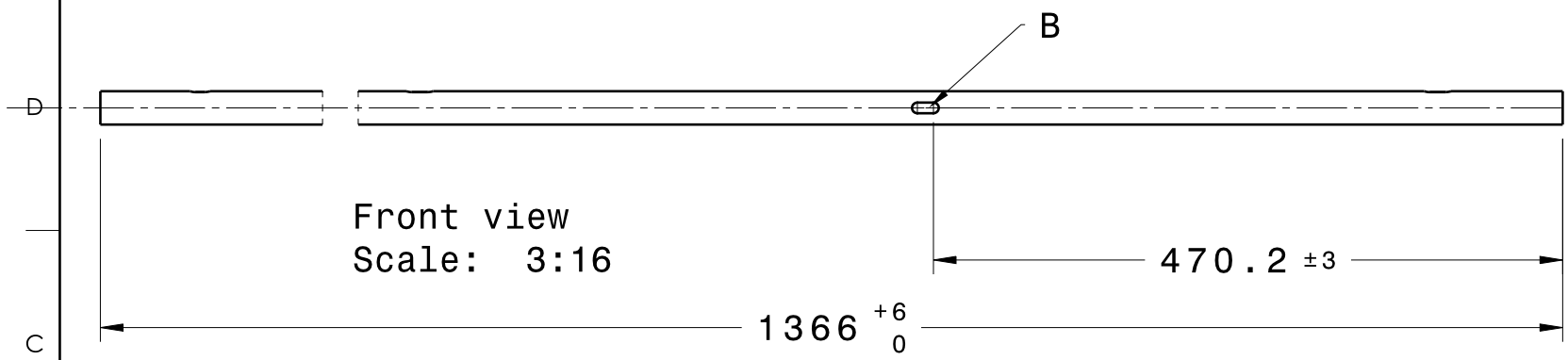


Front view
Scale: 3:16

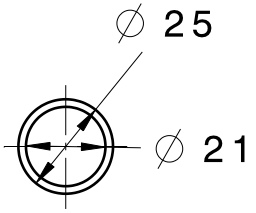


Right view
Scale: 1:2

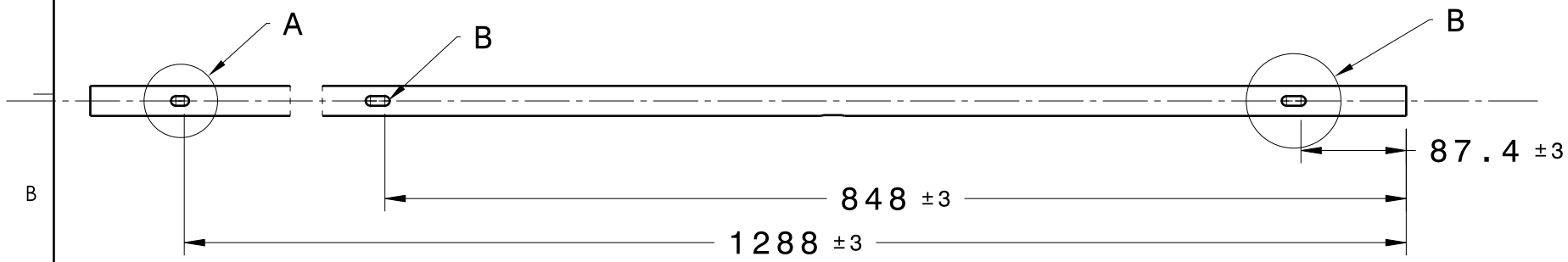


Top view
Scale: 3:16

| | | | | | |
|---|---|---|---|---|---|
| Concordia University | MATERIAL **CARBON FIBER** | | SURFACE ROUGHNESS √63 | TITLE **RIGHT BOOM** | |
| | FINISH **SMOOTH** | | TOLERANCES X ± .1, .X ± .05, .XX ± .005, .XXX ± .002, ANGLE ± .5° (UNLESS OTHERWISE SPECIFIED) | | |
| PROPRIETARY INFORMATION NOT TO BE RELEASED WITHOUT WRITTEN AUTHORIZATION FROM CONCORDIA UNIVERSITY | DESIGNER **L.GRANADOS** | ALL DIMENSIONS IN **MM** UNLESS OTHERWISE SPECIFIED | | A SIZE | DATE **01/12/2023** USED ON **AERO 490** |
| | DRAFTER **L.GRANADOS** | APPROVED | SCALE **1 : 1** | SHEET **1 / 1** DWG NO. **AF2D007** | REV NO. **00** |