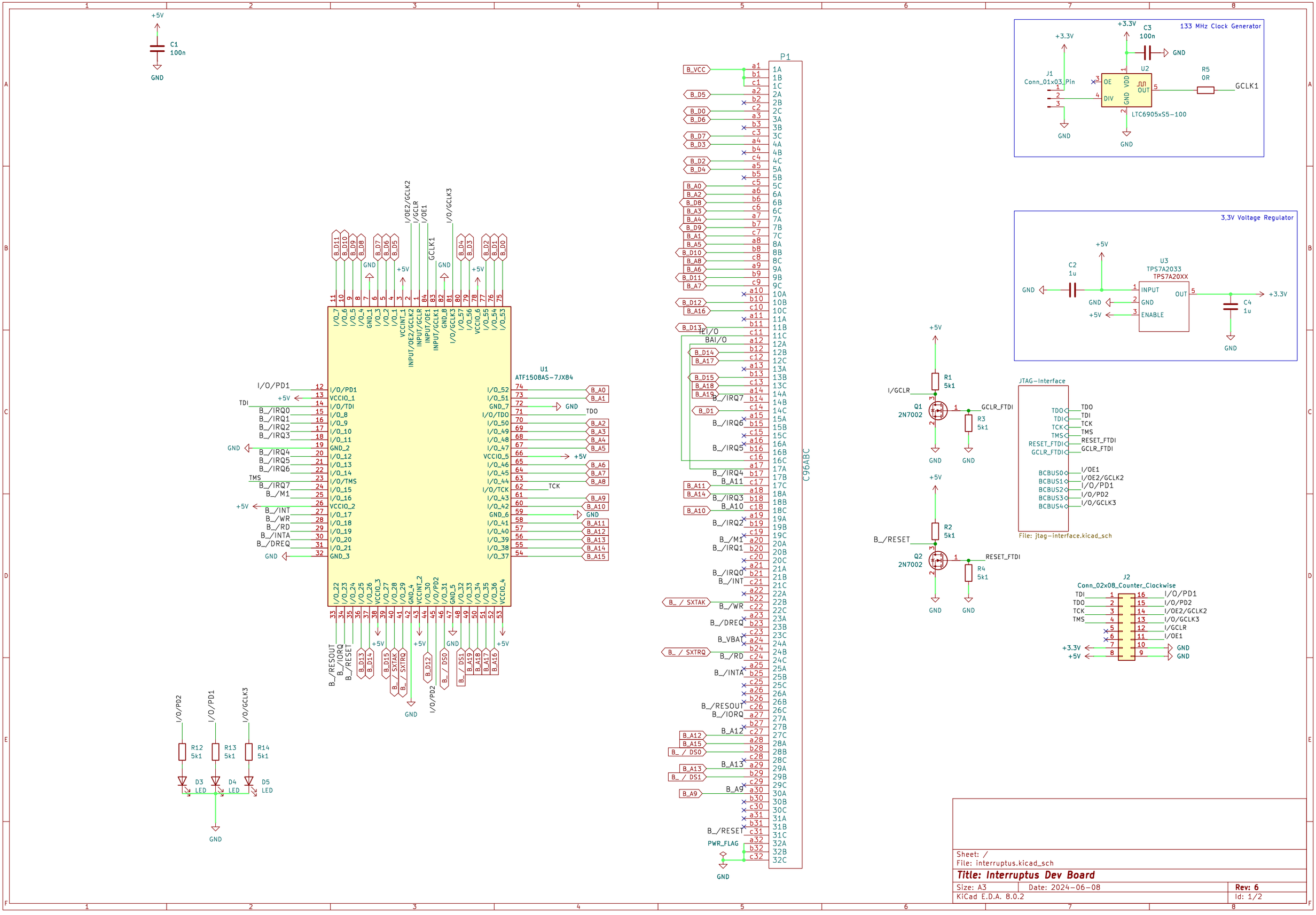
133 MHz Clock Generator
LTC6905xS5-100
3,3V Voltage Regulator
TPS7A2033
TPS7A20XX
JTAG-Interface
File: jtag-interface.kicad_sch
Conn_02x08_Counter_Clockwise
ATF1508AS-7JX84
C96ABC
Sheet: /
File: interruptus.kicad_sch
Title: Interruptus Dev Board
Size: A3
Date: 2024-06-08
Rev: 6
KiCad E.D.A. 8.0.2
Id: 1/2

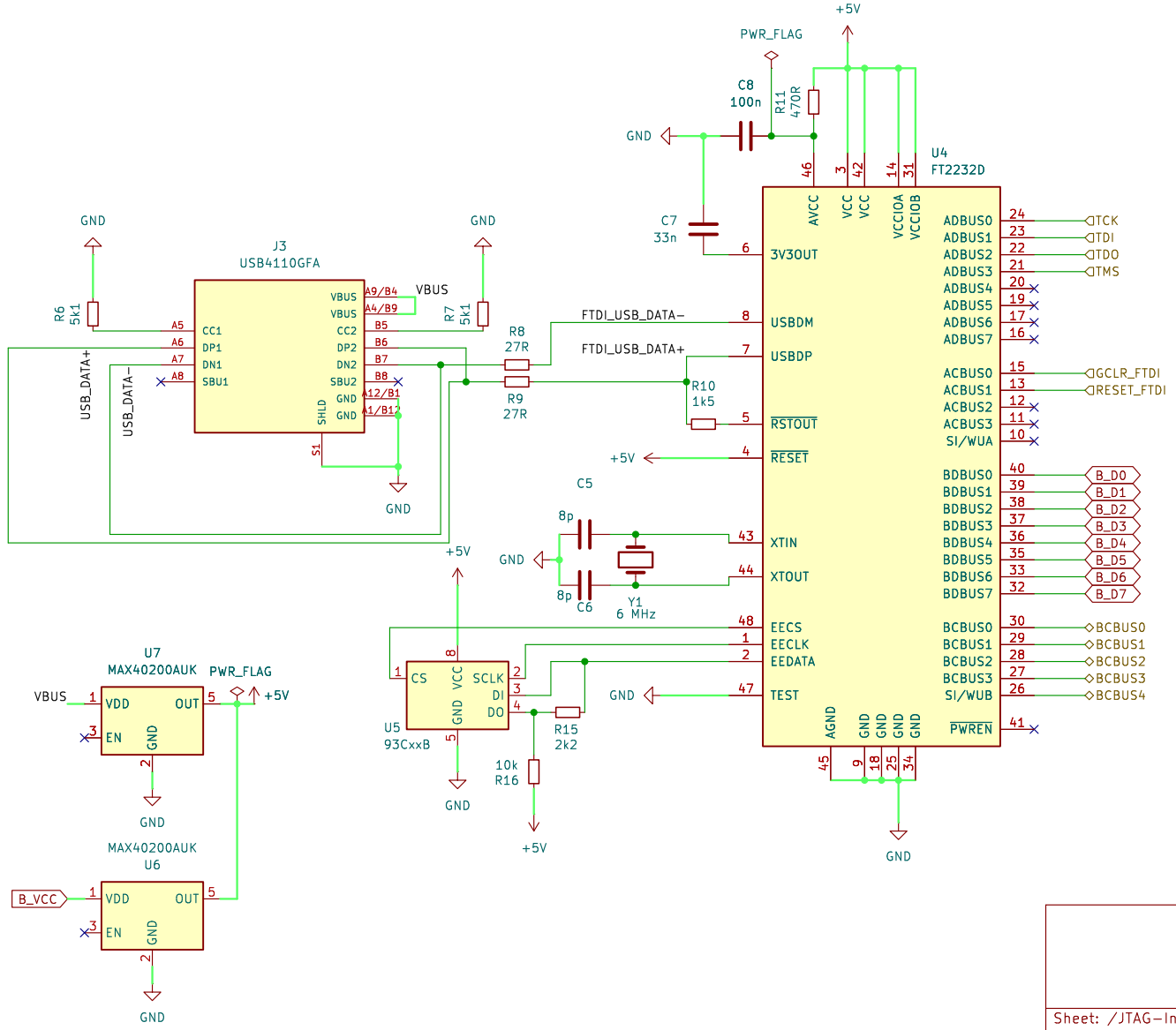

Sheet: /JTAG-Interface/
File: jtag-interface.kicad_sch

Title: Interruptus Dev Board

Size: A4	Date: 2024-06-08	**Rev: 6**
KiCad E.D.A. 8.0.2		Id: 2/2