Unit 04: Lists

Anthony Estey
CSC 115: Fundamentals of Programming II
University of Victoria

Unit 04 Overview

- Related Reading:
  - Textbook Chapter 5
- Learning Objectives: (You should be able to…)
  - understand the concept of and be able to implement the Node data structure
  - understand the concept of a linked list data structure, consisting of a linked collection of nodes
  - describe the differences between arrays and linked lists from a memory perspective
  - implement the List ADT operations with both a singly and doubly linked list
  - describe the running time of list operations implemented using a linked list, specifically when compared to an array implementation

The List ADT

- ADT List Operations:
  - Create an empty list
  - Determine whether a list is empty
  - Determine the number of items in a list
  - Add an item at a given position in a list
  - Remove the item at a given position in a list
  - Get the item at a given position in a list
  - Remove all items from a list
- Items are referenced by their position in a list:
  - (1st, 2nd, 3rd, etc)

Last unit we introduced the idea of the List ADT

List Implementation

- In this unit, we will explore two ways of implementing a list
  - Using an array (something we are familiar with by now)
  - Using a linked list (something we will see for the first time)

- After exploring the two different implementations, we will evaluate the strengths and weaknesses of both approaches, and specifically focus on the following:
  - Memory usage
  - Runtime speed

Array implementation

```
int[] data = new int[SIZE];
```

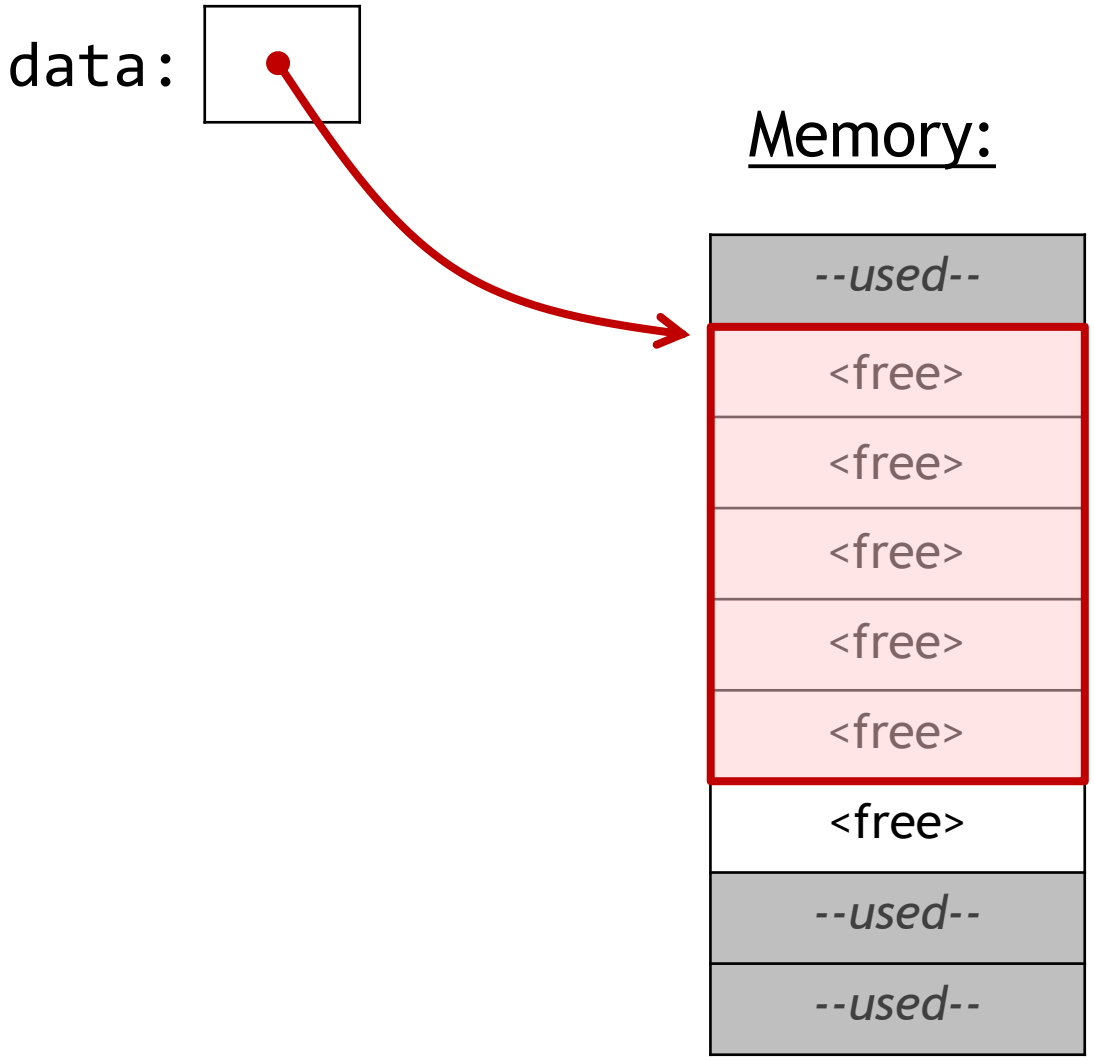

Array implementation

```
int[] data = new int[SIZE];
```

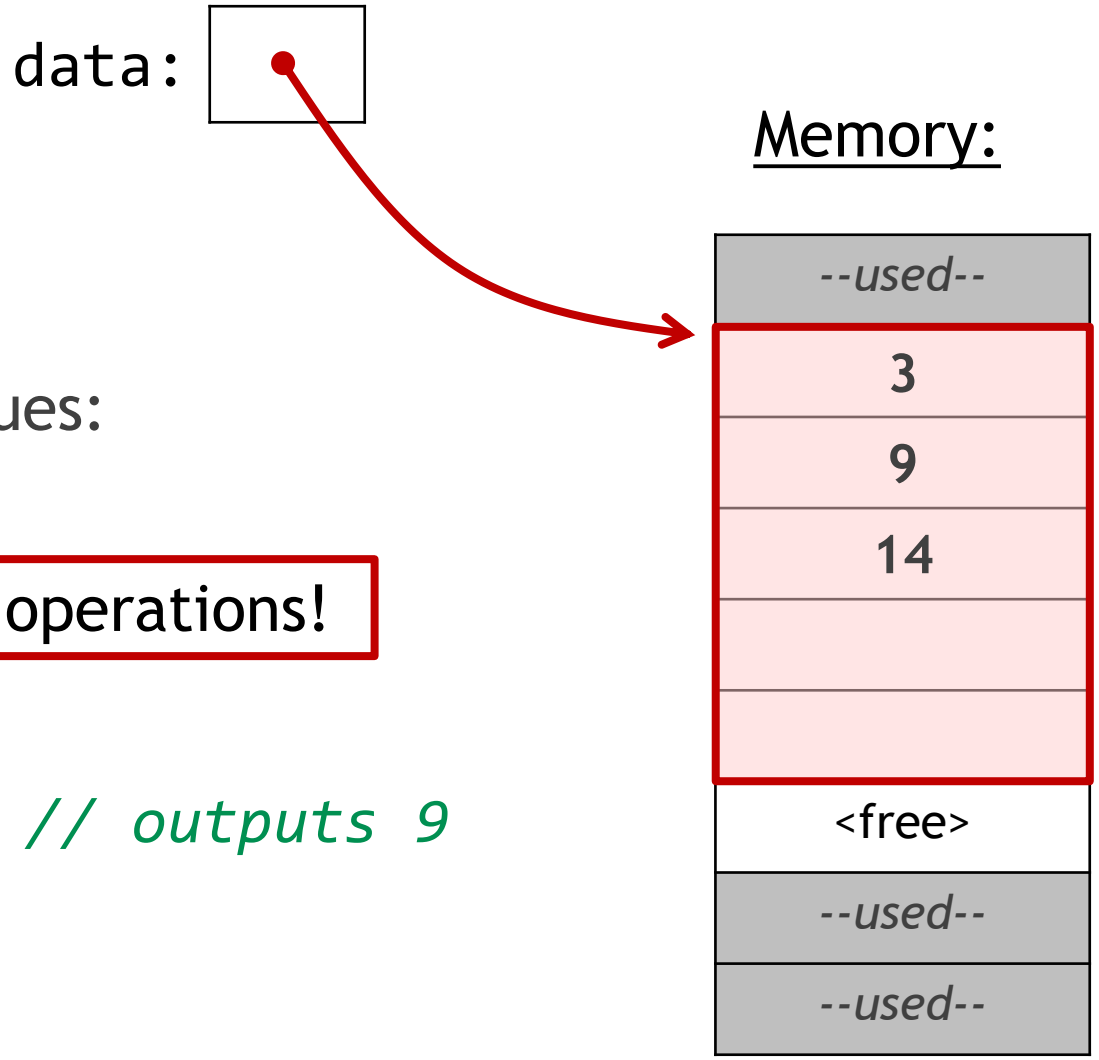

- Positives:
  - Easy to access and update array values:

```
data[0] = 3;
data[1] = 9;
data[2] = 14;
System.out.println(data[1]); // outputs 9
```

Very fast operations!

Array implementation

- Negatives:
- Memory usage:
  - How much memory should we initially allocate?
  - What happens when the array is full?
    - We will need to allocate memory somewhere else (find a location in memory big enough)
    - And copy all of the values to the new location
    - How big should we make the expanded array?

Imagine an array with a billion elements. All of them need to be copied to the new location!

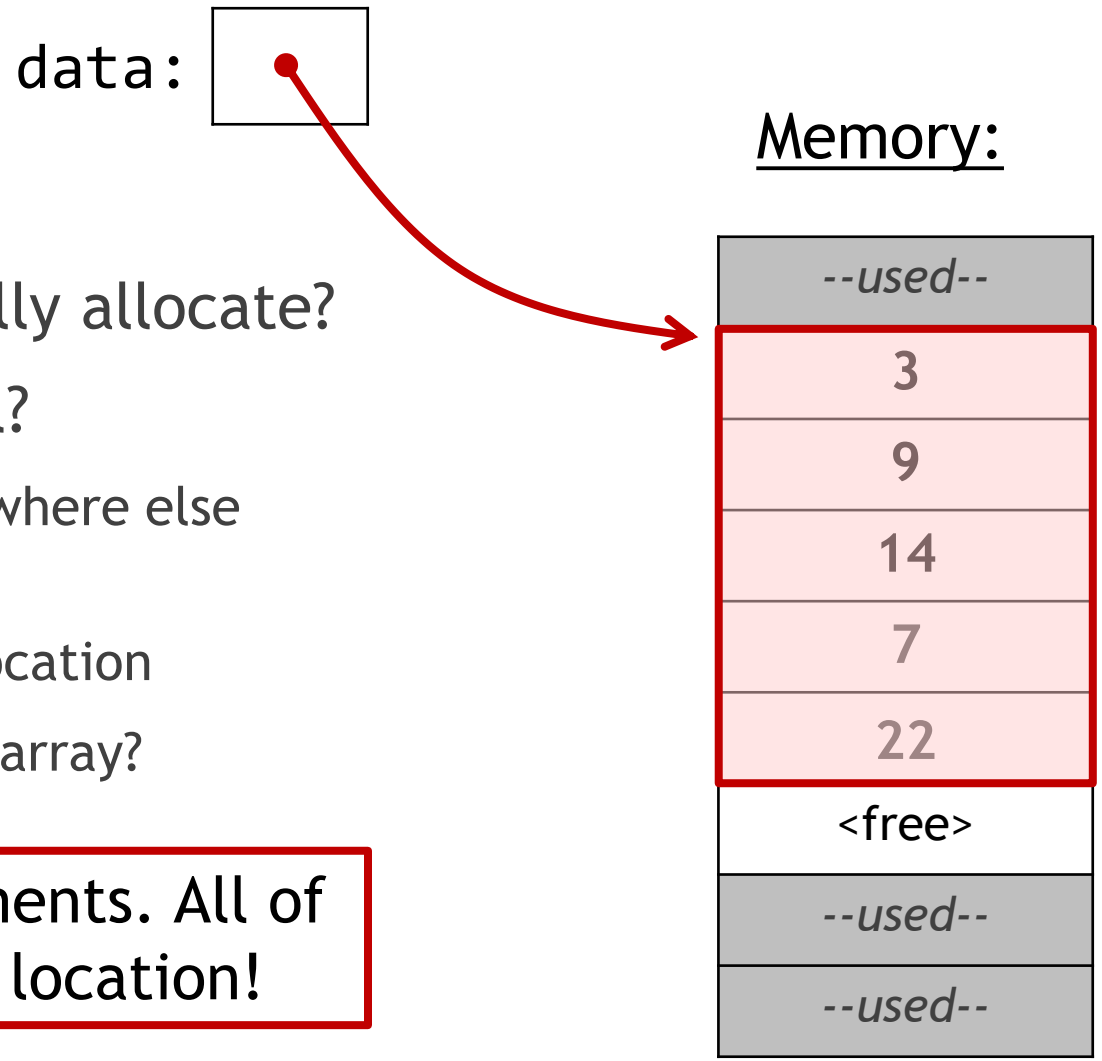

Array implementation

- Negatives:
- Maintaining element order
  - What happens if we want to insert 7 to the front?
  - We will need to shuffle the rest of the values down

Insert to the front when there are a billion elements means a lot of shuffling!

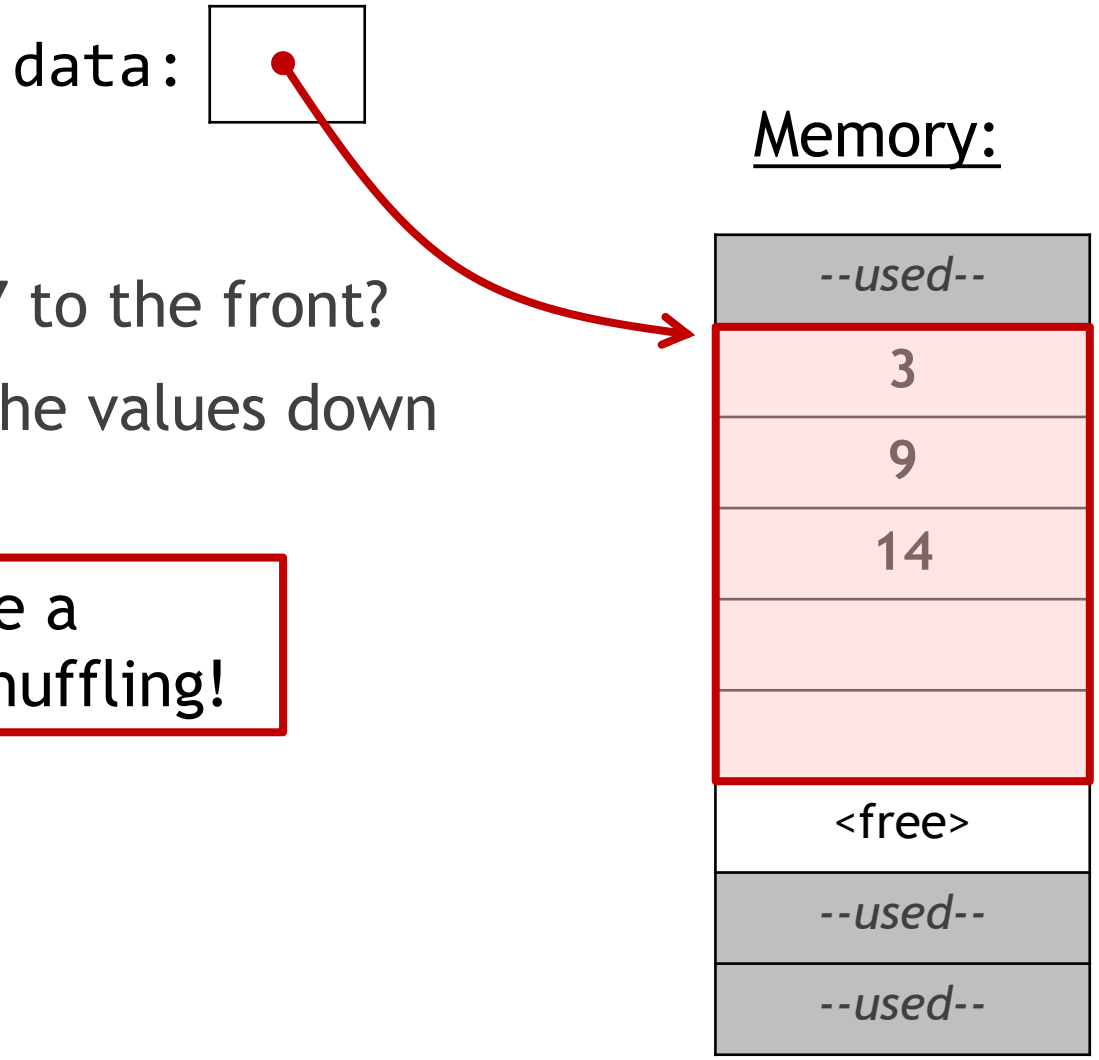

Summary: Array implementation

- Positives:
  - Easy to access and update values
- Negatives:
  - Memory allocation:
    - allocate a lot of extra space and there is wasted memory
    - not enough space means we need to keep expanding the array and copying all of the array date into the new location in memory
  - Insertion:
    - inserting a single element may require a complete reshuffling

Linked Lists - Motivation

- Imagine we have chosen to implement the List ADT using an array…
- Assume our list currently has the following items in it:

3	5	6	7	9	13	14	16	20	
0	1	2	3	4	5	6	7	8	9

Linked Lists - Motivation

- Imagine we have chosen to implement the List ADT using an array…
- Assume our list currently has the following items in it:

- What would happen if we call `addFront(2);`

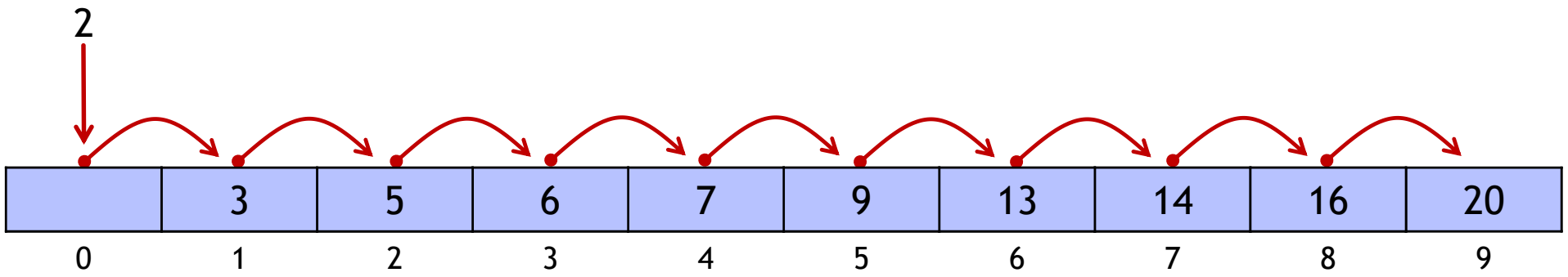

- A linked list allows for fast insertion/removal from the front or back of a list without the need to shuffle all other items up or down an index

What is a linked list?

- Assume we want in implement a list…
- Array:
  - allocate space…
  - insert elements 2, 5, and then 6, one at a time

```
int[] data = new int[SIZE];
```

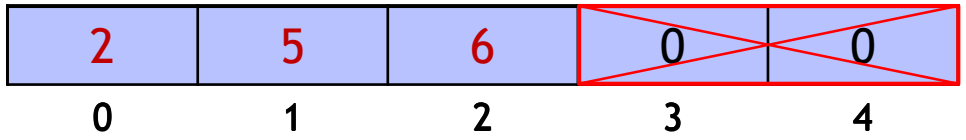

Create a smaller array?

When it fills up, a new larger array must be allocated, and all of the elements need to be copied over

In Java, arrays have a **fixed length**

What is a linked list?

- A **linked list** is a data structure composed of **nodes** linked together
- A **node** is a data structure that contains:
  - data (whatever we want to store in the list)
  - a pointer to the location of the next element in the list
  - (sometimes a pointer to the previous element too)

```
public class Node {
        private int data;
        private Node next;
        …
}
```

```
Node a = new Node(7, null);
Node b = new Node(3, null);
a.next = b;
```

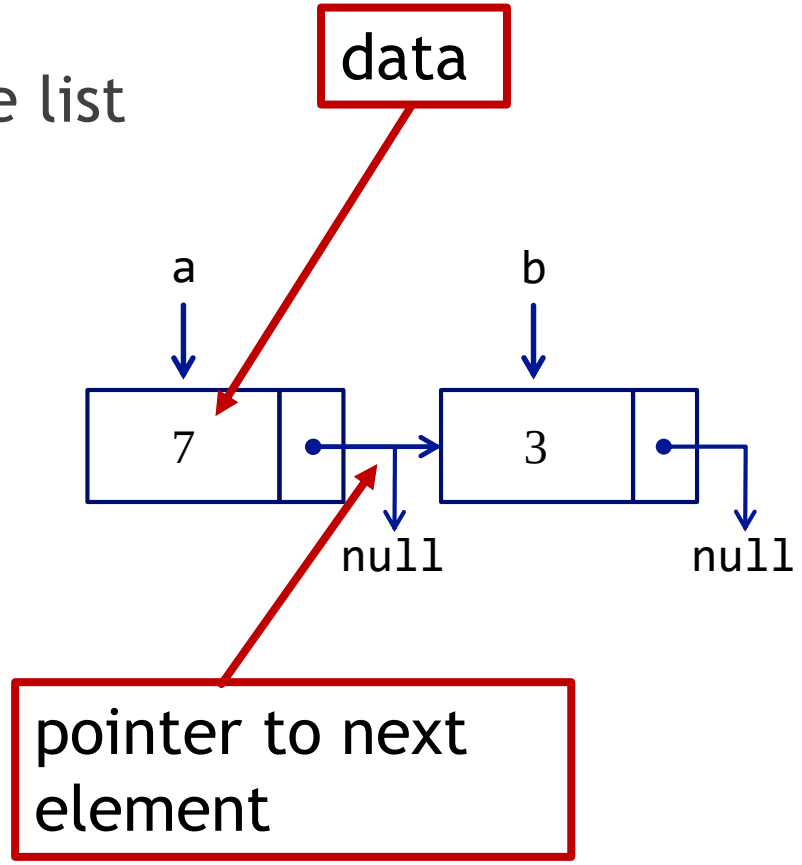

Iteration implementation

- We know how to iterate through all of the items in an array:

3	5	6	7	9
0	1	2	3	4

```
for (int i = 0; i < array.length; i++) {
     System.out.println(array[i]);
}
```

Iteration implementation

- With linked lists, we need to keep a reference to the head of the list. From there, we can reach all subsequent elements:

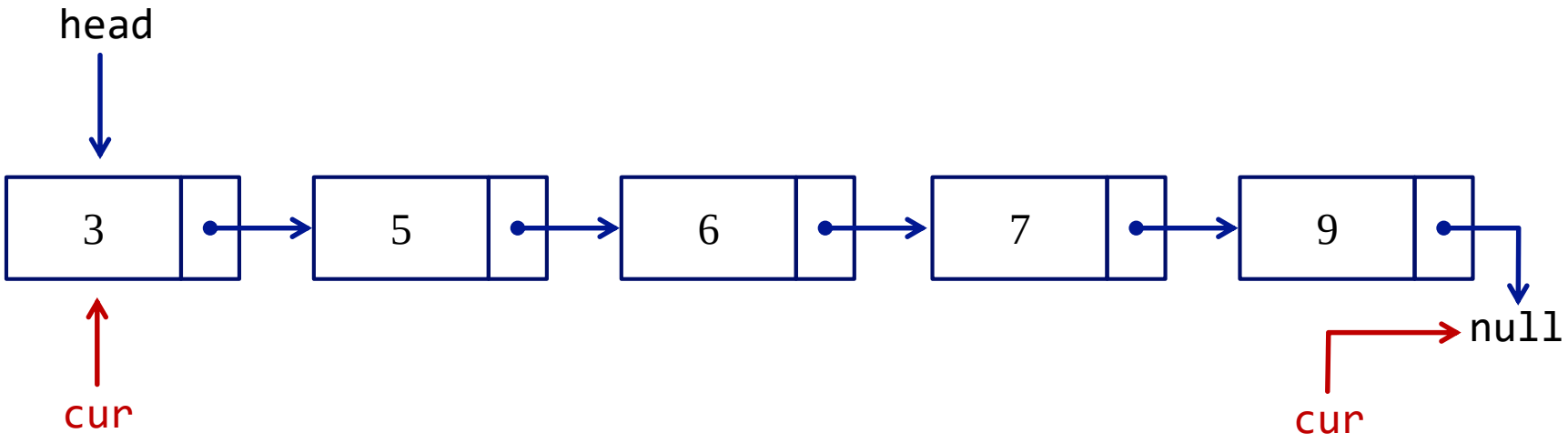


```
for (Node cur = head; cur != null; cur = cur.next) {
      System.out.println(cur.data));
}
```

Iteration

- With linked lists, we need to keep a reference to the head of the list. From there, we can reach all subsequent elements:

```
Node cur = head;
while (cur != null) {
      System.out.println(cur.data));
      cur = cur.next;
}
```

```
for (Node cur = head; cur != null; cur = cur.next) {
      System.out.println(cur.data));
}
```

Insertion

- First, determine where to insert the new node
- Then, update the next pointers appropriately

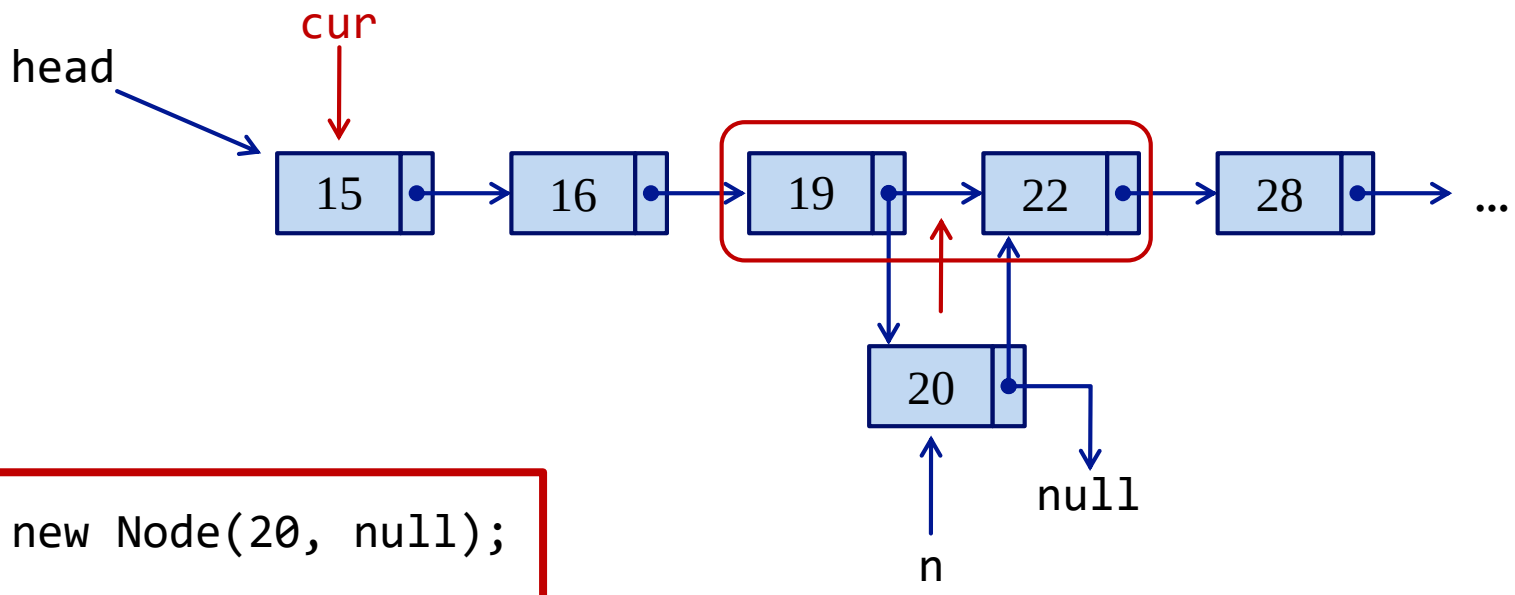


```
Node n = new Node(20, null);
n.next = cur.next;
cur.next = n;
```

Removal

- First, locate the element *preceding* the one to remove
- Then, update the next pointers so that the deleted node is skipped
  - Java's garbage collection will delete of any object that nothing points to

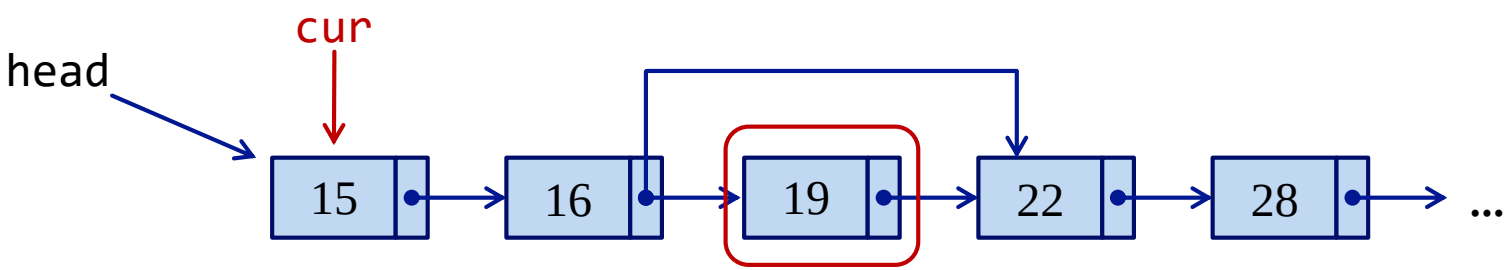


```
cur.next = cur.next.next;
```

Order of operations is important!

- Let's revisit our insertion example, and assume we want to insert a node with data value 20 between node's 19 and 22.

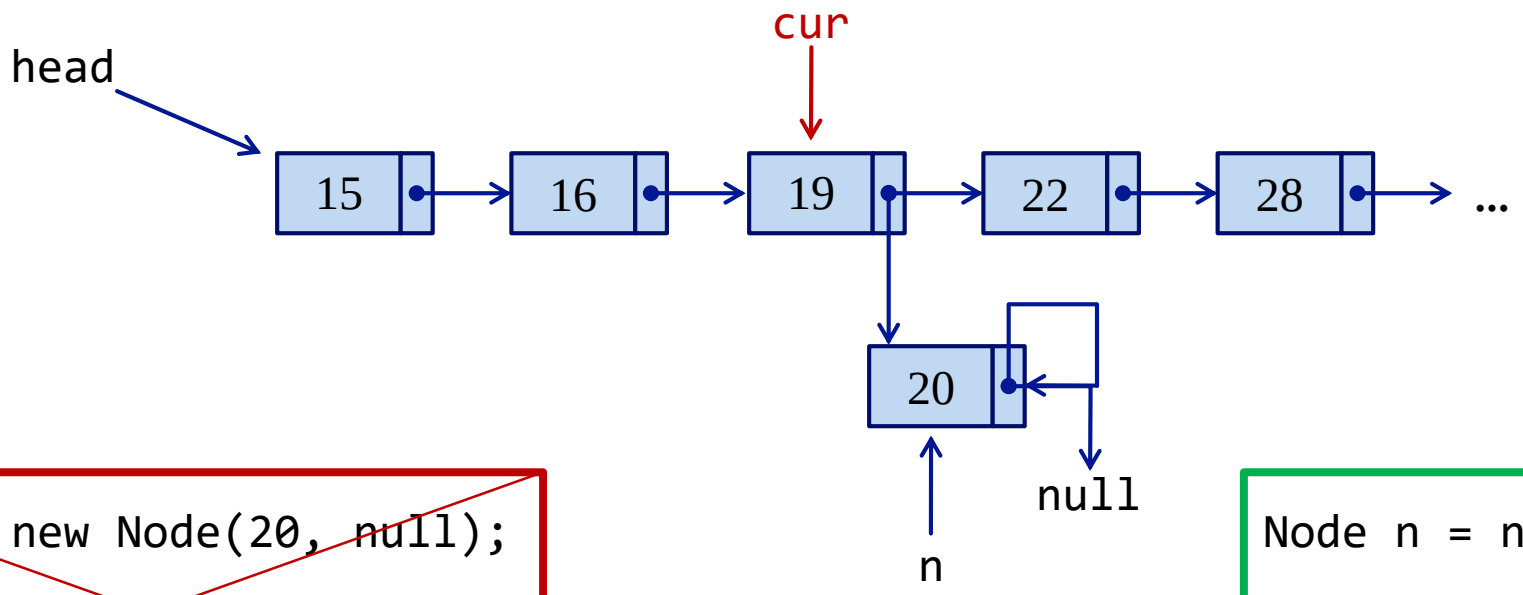

~~
```
Node n = new Node(20, null);
cur.next = n;
n.next = cur.next;
```
~~

```
Node n = new Node(20, null);
n.next = cur.next;
cur.next = n;
```

Adding an item to the front of a list

- First, determine where to insert the new node
- Then, update the next pointers appropriately

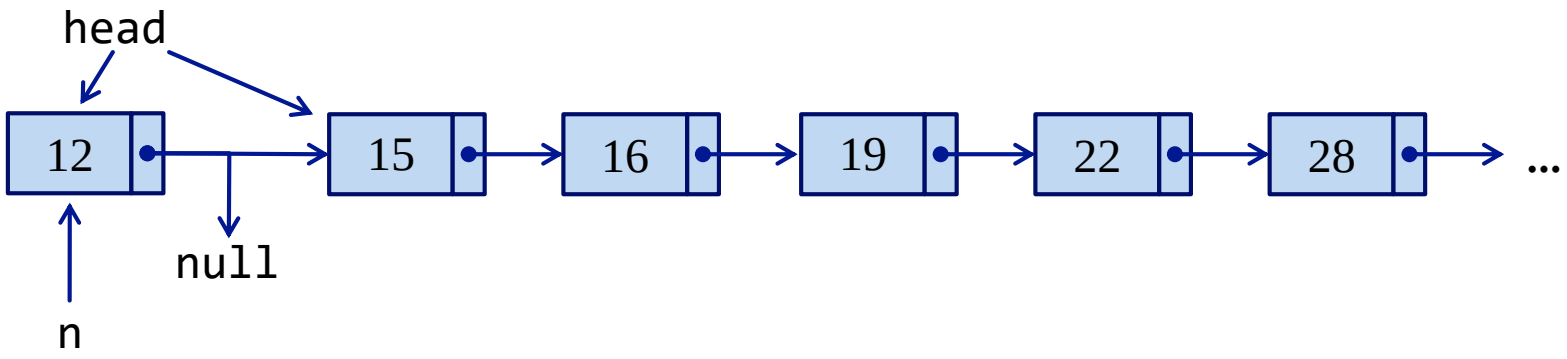


```
Node n = new Node(12, null);
n.next = head;
head = n
```

```
Node n = new Node(12, head);
head = n
```

Adding an item to the back of a list

- First, determine where to insert the new node
- Then, update the next pointers appropriately

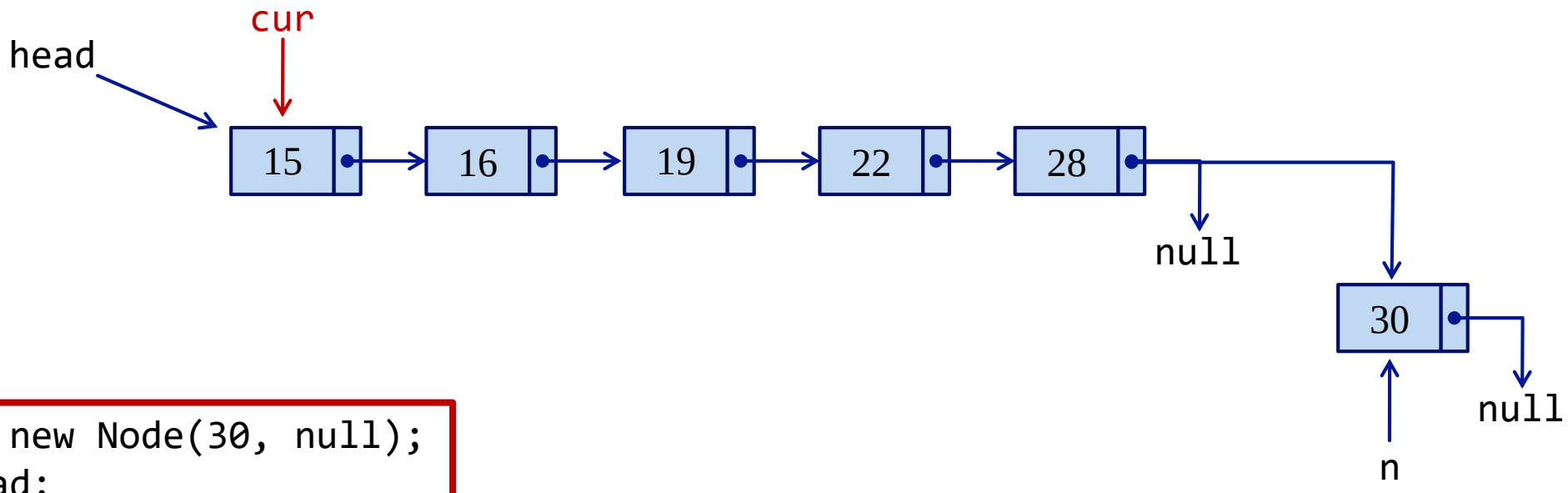


```
Node n = new Node(30, null);
cur = head;
while (cur.next != null) {
        cur = cur.next;
}
cur.next = n;
```

Adding an item to the back of a list

- First, determine where to insert the new node
- Then, update the next pointers appropriately

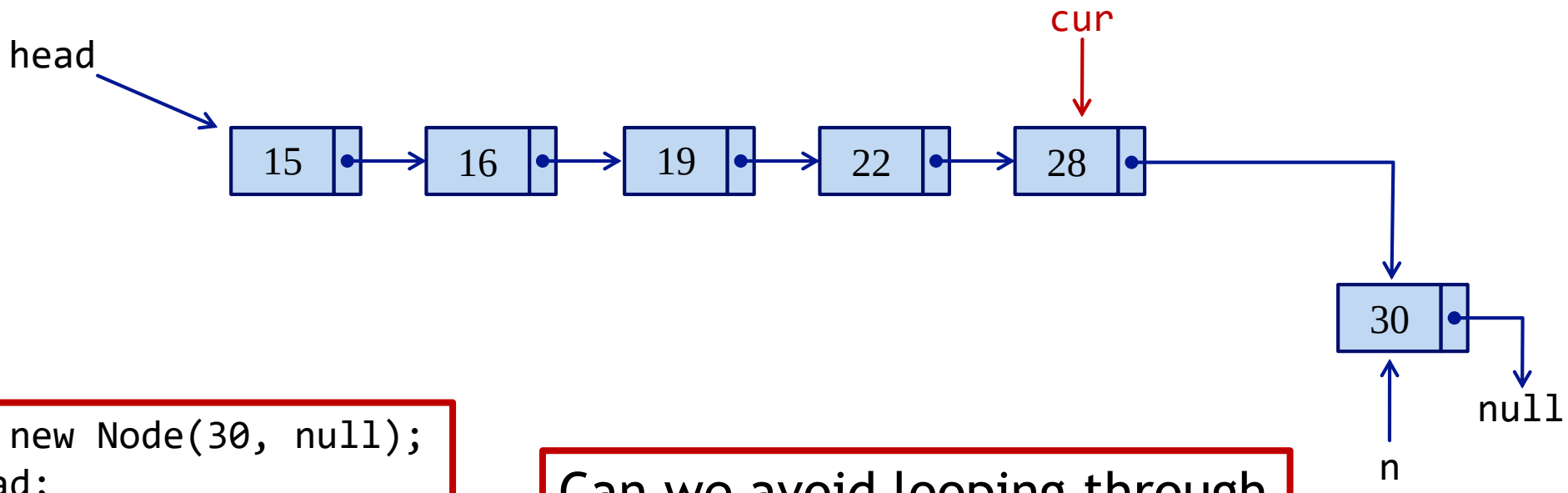


```
Node n = new Node(30, null);
cur = head;
while (cur.next != null) {
        cur = cur.next;
}
cur.next = n;
```

Can we avoid looping through the whole list in order to insert an item at the back?

Tail Reference

- Idea: We have a reference to the front (head) of our list
  - Why don't we do the same with the back (tail)

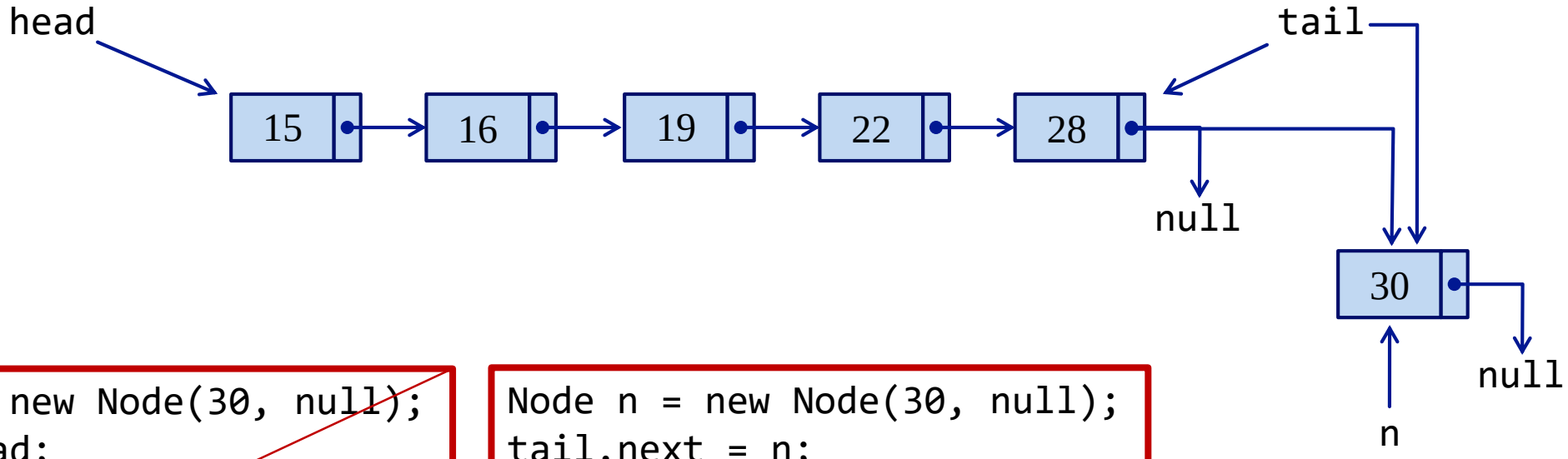


```
Node n = new Node(30, null);
cur = head;
while (cur.next != null) {
        cur = cur.next;
}
cur.next = n;
```

```
Node n = new Node(30, null);
tail.next = n;
tail = n;
```

Linked List Variations

```
public class IntegerLinkedList implements IntegerList {
        private int numElements;
        private Node head;


        public IntegerLinkedList() {
                head = null;

                numElements = 0;
        }
        …
}
```

- Suppose we have a linked list with a head reference as defined above
  - operations at the back of the list have require us to traverse the whole list

Linked List Variations

```
public class IntegerLinkedList implements IntegerList {
        private int numElements;
        private Node head;
        private Node tail;

        public IntegerLinkedList() {
                head = null;
                tail = null;
                numElements = 0;
        }
        …
}
```

- Suppose we have a linked list with a head reference as defined above
  - operations at the back of the list have require us to traverse the whole list
  - Adding a tail reference requires very little overhead, and makes inserting/removing from the back of the list much more efficient

Doubly-linked list

- A **doubly-linked list** is a linked list where each node keeps a reference to both the preceding *and* following nodes in the chain.
- A **node** is a data structure that contains:
  - data (whatever we want to store in the list)
  - a pointer to the location of the next element in the list
  - **(sometimes a pointer to the previous element too)**

```
public class Node {
      private int data;
      private Node prev;
      private Node next;
      …
}
```

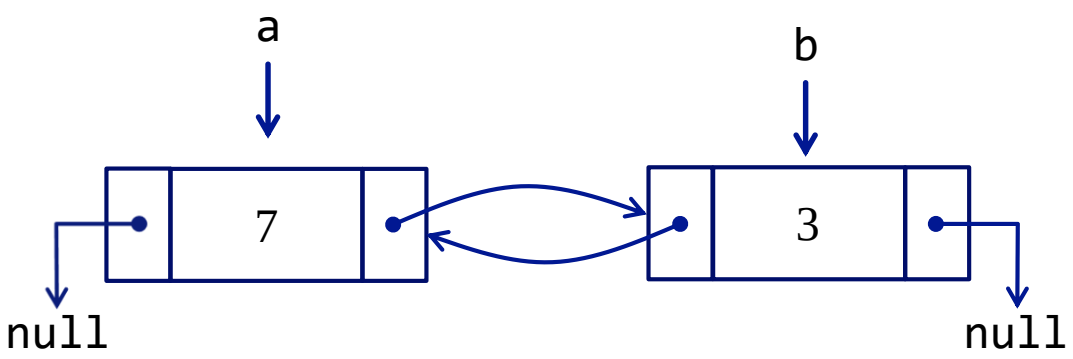

Doubly-linked List

- Node definition contains an additional reference pointer
  - This allows us to traverse the list in either direction!

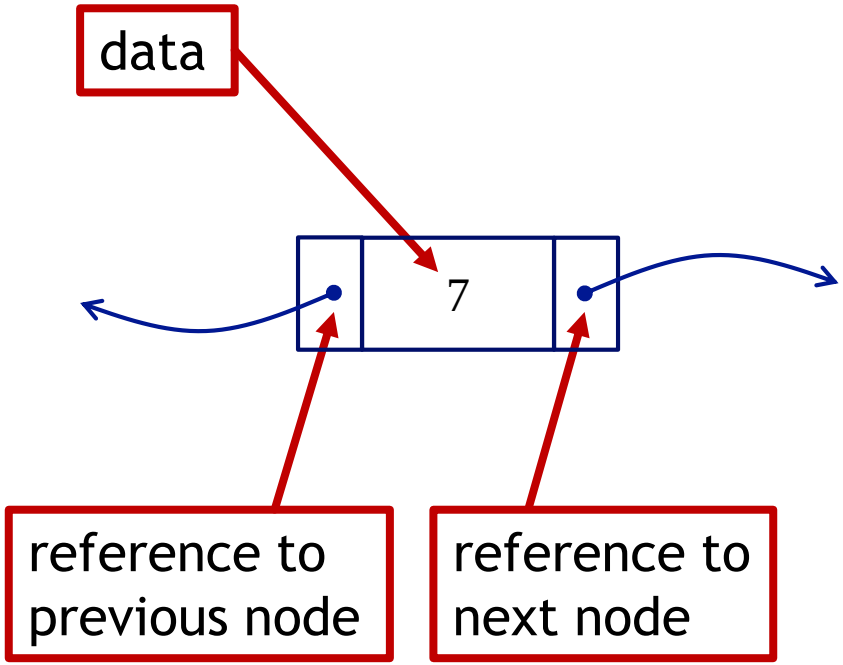

Insertion

- First, determine where to insert the node
- Then, update pointers so that the order is correct

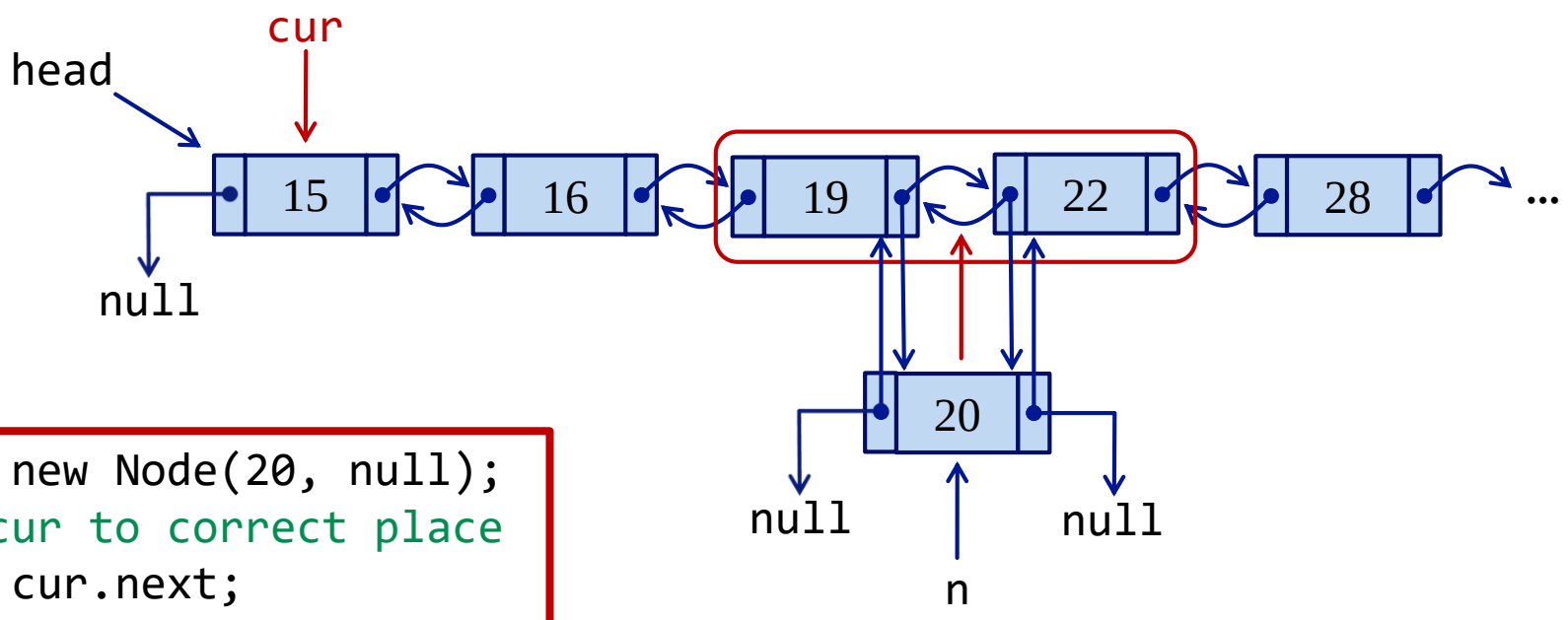


```
Node n = new Node(20, null);
// move cur to correct place
n.next = cur.next;
n.prev = cur;
cur.next.prev = n;
cur.next = n;
```

Removal

- First, locate the element to remove
- Then, update the next pointers so that the deleted node is skipped

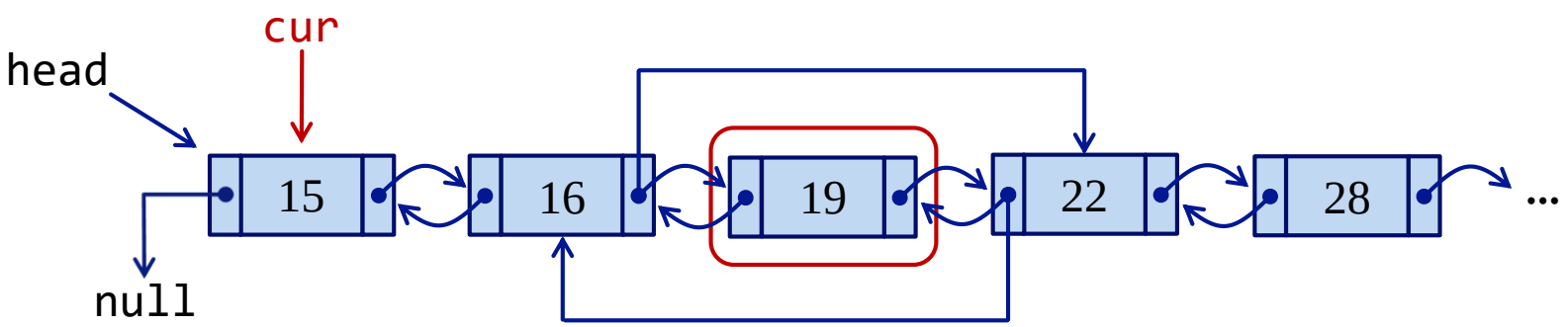


```
cur.next.prev = cur.prev;
cur.prev.next = cur.next;
cur = null;
```