1. INTRODUCTION

A wire harness is an organized set of wires, cables, and connectors that transmit electrical power and signals between different components in an electrical or electronic system. Instead of having multiple loose wires, a wire harness groups them into a structured assembly using protective coverings such as insulation, sleeves, conduits, or cable ties. This improves reliability, safety, and ease of installation. Wire harnesses are widely used in industries such as automotive, aerospace, consumer electronics, and industrial automation, where complex electrical connections are required.

In modern systems, wire harnesses play a critical role in ensuring proper communication and power distribution between subsystems. For example, in automobiles, they connect sensors, control units, batteries, and actuators, enabling coordinated operation of the vehicle. Any fault in the wire harness, such as an open circuit, short circuit, or high resistance connection, can lead to system malfunction, reduced efficiency, or even safety hazards. Therefore, maintaining the integrity and quality of wire harnesses is essential for the reliable operation of electrical systems.

Traditional methods of testing wire harnesses are often manual and time-consuming. These methods typically involve checking continuity using multimeters and visually inspecting connections, which can be prone to human error and may not detect subtle issues such as signal delay or gradual heating under load. As systems become more complex, the limitations of manual testing become more evident, creating a need for automated and intelligent diagnostic solutions.

Another important aspect of wire harness performance is its behavior under electrical load. When current flows through a wire, power is dissipated in the form of heat due to the inherent resistance of the conductor. Excessive current or poor-quality connections can result in overheating, which may damage insulation, reduce lifespan, or cause failure. Thus, evaluating both electrical characteristics (such as signal propagation and continuity) and thermal characteristics (such as temperature rise) is necessary for a comprehensive assessment of wire quality.

This project focuses on developing an automated wire harness management and diagnostic system that integrates signal integrity testing with load and thermal analysis. By combining modern microcontrollers and sensors, the system aims to provide accurate, real-time evaluation of wire harness conditions. Such an approach enhances testing efficiency, reduces human error, and improves overall reliability and safety in electrical systems.

Benefits of Wire Harness Systems

Wire harness systems provide an efficient and reliable solution for managing complex electrical wiring in modern devices and installations. One of the primary benefits of a wire harness is **organization**. Instead of handling multiple individual wires separately, a harness groups them into a single, structured assembly. This organized arrangement reduces clutter, simplifies routing, and makes installation and maintenance much easier. It also minimizes the chances of incorrect connections during assembly.

Another important advantage is **enhanced safety**. Wire harnesses are typically enclosed in protective materials such as insulation sleeves, conduits, or tapes. These coverings protect the wires from environmental factors like moisture, dust, heat, and mechanical vibrations. By preventing exposure and reducing wear and tear, wire harnesses lower the risk of electrical faults such as short circuits, insulation failure, or accidental contact, thereby improving overall system safety.

Wire harnesses also contribute significantly to **improved reliability and durability**. Since the wires are bundled and secured together, they are less likely to experience physical damage due to bending, friction, or movement. The structured layout ensures stable electrical connections, which helps maintain consistent signal transmission and power delivery over time. This reliability is especially important in critical applications such as automotive systems, industrial machinery, and aerospace equipment.

In addition, wire harnesses offer **ease of installation and reduced assembly time**. Pre-designed harnesses can be manufactured according to specific layouts and requirements, allowing technicians to install them quickly without needing to connect each wire individually. This not only speeds up the production process but also reduces labor costs and the likelihood of human error during assembly.

Another key benefit is **efficient space utilization**. By bundling wires together in a compact form, wire harnesses optimize the use of available space within devices and systems. This is particularly valuable in applications where space is limited, such as electronic devices and vehicles, where compact and efficient design is essential.

Wire harness systems also support **better maintenance and troubleshooting**. Since wires are organized and often labeled, identifying and locating faults becomes easier compared to dealing with a mass of unstructured wiring. This leads to faster diagnostics and reduced downtime during repairs or maintenance.

Finally, wire harnesses improve **aesthetic and structural neatness**. A well-organized wiring system not only enhances the visual appearance of the setup but also reflects good engineering practice. Neat wiring reduces confusion, improves accessibility, and ensures that systems remain manageable even as complexity increases.

Wire Harness Protocols

In electrical and electronic systems, a wire harness not only carries power but also enables communication between different components. This communication follows specific **protocols**, which define how data is transmitted, received, and interpreted across the wiring system. Wire harness protocols are especially important in applications such as automotive systems, industrial automation, and embedded electronics, where multiple devices must communicate reliably over shared wiring.

One of the most widely used communication protocols in wire harness systems is the **Controller Area Network (CAN)**. CAN is commonly used in vehicles to allow microcontrollers and electronic control units (ECUs) to communicate without the need for a central computer. It uses a differential signaling

method over two wires (CAN High and CAN Low), which makes it highly resistant to noise and interference. This reliability is crucial in harsh environments such as automobiles.

Another important protocol is the **Local Interconnect Network (LIN)**. LIN is a simpler and lower-cost alternative to CAN, used for communication between less critical components such as sensors, switches, and actuators. It operates on a single wire and is typically used where high-speed communication is not required.

The **FlexRay** protocol is used in advanced automotive systems that require high-speed and deterministic data transfer, such as drive-by-wire and safety-critical applications. FlexRay provides faster data rates and greater fault tolerance compared to CAN, making it suitable for modern high-performance vehicles.

In industrial and embedded systems, protocols like the **Inter-Integrated Circuit (I2C)** and **Serial Peripheral Interface (SPI)** are commonly used. I2C uses two wires (data and clock) and supports multiple devices on the same bus, while SPI offers higher speed communication using separate lines for data transmission and clock signals.

Another widely used protocol is the **Universal Asynchronous Receiver-Transmitter (UART)**, which enables simple point-to-point communication between devices. It is commonly used for debugging, data logging, and communication between microcontrollers.

For high-speed data transmission in multimedia and computing applications, protocols such as **Universal Serial Bus (USB)** and **Ethernet** are also implemented through specialized wire harnesses. These protocols require careful design considerations, including shielding and impedance matching, to maintain signal integrity.

Wire Harness Standards

Wire harness standards are essential guidelines that define the design, manufacturing, testing, and performance requirements of wiring systems. These standards ensure that wire harnesses are safe, reliable, and compatible across different applications and industries. By following established standards, manufacturers can maintain quality, reduce failures, and ensure interoperability between components from different sources.

One of the most widely recognized standards in the wire harness industry is the **IPC/WHMA-A-620**. This standard provides comprehensive guidelines for the acceptability of wire harness assemblies, including criteria for soldering, crimping, insulation, and mechanical integrity. It defines different classes of products based on reliability requirements, ranging from general consumer electronics to high-performance and mission-critical systems. This standard is widely used for inspection and quality assurance in manufacturing.

In the automotive sector, wire harnesses must comply with standards such as **ISO 6722** and **SAE J1128**. These standards specify requirements for low-voltage cables used in road vehicles, including conductor material, insulation type, temperature rating, and resistance to environmental conditions such

as heat, oil, and vibration. They ensure that automotive wiring systems can operate reliably under harsh conditions.

For military and aerospace applications, stricter standards are applied to ensure high reliability and safety. The **MIL-W-5088** standard defines the requirements for wiring in military aircraft, including installation practices, protection methods, and inspection procedures. Similarly, **AS50881** provides guidelines for the installation and maintenance of electrical wiring in aerospace systems. These standards emphasize durability, fault tolerance, and resistance to extreme environmental conditions.

Another important category includes environmental and safety standards such as **RoHS** and **REACH**. These regulations restrict the use of hazardous materials in electrical components and ensure that wire harnesses are environmentally friendly and safe for human use. Compliance with these standards is essential for products intended for global markets.

For industrial and general electrical applications, standards like **UL 758** and **IEC 60228** define the specifications for wire types, conductor sizes, insulation properties, and electrical performance. These standards help ensure consistency and compatibility across various electrical systems and equipment.

Testing and performance verification are also governed by standards such as **ISO 19642**, which outlines testing procedures for automotive cables, including mechanical, electrical, and environmental tests. These tests evaluate properties such as insulation resistance, tensile strength, and temperature endurance to ensure that the wire harness performs reliably under real-world conditions.

Wire Standards

Wire standards define the physical, electrical, and environmental characteristics of individual wires used within a wire harness. These standards ensure that wires are manufactured with consistent quality, can safely carry the required current, and perform reliably under different operating conditions. They cover aspects such as conductor material, size, insulation type, voltage rating, temperature tolerance, and mechanical strength.

One of the fundamental elements in wire standards is the **conductor specification**. Most electrical wires use copper or aluminum as the conducting material due to their high conductivity. Standards such as **IEC 60228** classify conductors based on their construction (solid, stranded, or flexible) and define their electrical resistance limits. Stranded conductors are commonly used in wire harnesses because they offer greater flexibility and resistance to mechanical stress compared to solid wires.

Another important aspect is the **wire size or gauge**, which determines the current-carrying capacity of the wire. In many regions, wire size is specified using the **American Wire Gauge (AWG)** system, where a lower gauge number indicates a thicker wire with higher current capacity. Internationally, wire sizes may also be expressed in square millimeters (mm^2). Proper selection of wire size is critical to prevent overheating and ensure safe operation.

The **insulation material** is also defined by wire standards. Insulation protects the conductor from environmental factors and prevents electrical leakage or short circuits. Standards such as **UL 758** specify different types of insulation materials, including PVC, XLPE, and Teflon, along with their voltage and temperature ratings. These materials are chosen based on the application requirements, such as resistance to heat, chemicals, or mechanical wear.

Wire standards also address **temperature and voltage ratings**, which indicate the maximum conditions under which a wire can safely operate. For example, automotive wires must withstand high temperatures and vibrations, and are governed by standards like **ISO 6722**. These standards ensure that wires maintain their performance even in harsh environments.

In addition to electrical properties, **mechanical and environmental requirements** are also specified. Wires must be able to resist bending, abrasion, moisture, and chemical exposure. Standards define tests for tensile strength, flexibility, and insulation durability to ensure long-term reliability. Compliance with these requirements is especially important in industrial, automotive, and aerospace applications.

Color coding and identification are another part of wire standards. Different colors are used to represent specific functions, such as power, ground, or signal lines. This helps in easy identification, installation, and troubleshooting of wiring systems. Standardized color codes reduce errors and improve maintenance efficiency.

Finally, safety and environmental regulations such as **RoHS** ensure that wires do not contain harmful materials like lead or mercury. These regulations are important for protecting both users and the environment.

Insulation Standards for Electrical Wires

Insulation standards define the materials, performance requirements, and testing methods used to ensure that the insulating layer of a wire provides adequate protection, safety, and durability. The insulation in a wire harness plays a critical role by preventing electrical leakage, avoiding short circuits, and protecting the conductor from environmental and mechanical damage. Proper insulation is essential for safe and reliable operation in all electrical systems.

One of the key standards governing insulation materials is **UL 758**. This standard specifies different types of insulation materials such as PVC (Polyvinyl Chloride), XLPE (Cross-linked Polyethylene), and PTFE (Teflon), along with their temperature ratings, voltage limits, and flame resistance properties. It ensures that wires used in appliances and electronic systems meet safety and performance requirements.

In international applications, **IEC 60227** and **IEC 60502** are widely used. These standards define insulation thickness, dielectric strength, and mechanical properties for low and medium voltage cables. They ensure consistency in insulation quality across different manufacturers and regions.

For high-performance and demanding environments such as automotive systems, standards like **ISO 6722** specify insulation requirements that can withstand high temperatures, vibrations, oil exposure, and

mechanical stress. These standards ensure that insulation does not degrade under harsh operating conditions.

Another important insulation-related standard is **IEC 60332**, which focuses on flame retardancy. It defines tests to evaluate how cables behave under fire conditions, ensuring that insulation materials do not easily catch fire or propagate flames. This is crucial for safety in buildings, vehicles, and industrial systems.

Insulation standards also include **thermal classification**, which defines the maximum temperature a material can withstand without degradation. For example:

- PVC: typically up to 70–105°C
- XLPE: up to 125–150°C
- PTFE: up to 200°C or higher

These temperature ratings are standardized to ensure safe operation under expected conditions.

In addition to thermal properties, insulation must meet **electrical performance criteria**, such as dielectric strength and insulation resistance. These properties ensure that the insulation can withstand applied voltage without breakdown and prevent leakage currents. Standards define minimum acceptable values and testing procedures to verify these characteristics.

Mechanical and environmental durability is also addressed. Insulation must resist abrasion, moisture, chemicals, and UV radiation. Standards include tests for flexibility, tensile strength, and resistance to environmental aging to ensure long-term reliability.

Finally, environmental and safety regulations such as **RoHS** and **REACH** ensure that insulation materials are free from harmful substances and safe for both users and the environment.

Wire Harness Techniques

Wire harness techniques refer to the methods and best practices used in the design, assembly, routing, and protection of wires within a harness. These techniques are essential to ensure that the wiring system is reliable, durable, and safe under various operating conditions. Proper implementation of these techniques helps prevent electrical faults, reduces maintenance effort, and improves overall system performance.

One of the fundamental techniques in wire harness assembly is **crimping**. Crimping involves attaching connectors or terminals to wires using a mechanical compression process. A properly executed crimp creates a strong electrical and mechanical connection without the need for soldering. It ensures low resistance at the संपर्क point and high durability under vibration. In high-reliability applications, crimping is preferred over soldering because it avoids issues like solder fatigue and cracking.

Another important technique is **soldering**, which is used to create permanent electrical connections by melting a filler metal (solder) between conductors. While soldering provides excellent conductivity, it must be carefully controlled to avoid cold joints, excessive heat damage, or brittle connections. In many modern harness systems, soldering is used selectively, often in combination with crimping.

Wire routing and layout is a critical design technique. Wires must be routed in a way that minimizes stress, avoids sharp bends, and prevents interference with moving parts. Proper routing also reduces electromagnetic interference (EMI) and signal noise. Techniques such as separating power and signal wires, maintaining proper spacing, and avoiding parallel routing of high-current and sensitive signal lines are commonly used to improve performance.

Bundling and securing techniques are used to keep wires organized and protected. Methods such as cable ties, lacing, clamps, and sleeves are used to group wires together. This not only improves the appearance of the harness but also prevents movement, vibration damage, and wear due to friction. Protective coverings like corrugated tubes, braided sleeves, and heat-shrink tubing are often applied to enhance durability.

Another key technique is **strain relief**, which prevents mechanical stress from being transferred to electrical connections. Strain relief methods include adding slack in the wire, using grommets, or securing the wire near connectors. This is especially important in environments with vibration or repeated movement, where stress can lead to wire breakage or connector failure.

Shielding and grounding techniques are used to protect signals from electromagnetic interference. Shielded cables or grounded metal braids are used in applications where signal integrity is critical, such as communication systems. Proper grounding ensures that unwanted noise is safely dissipated, improving the accuracy and reliability of signal transmission.

Labeling and identification is another important practice in wire harness techniques. Each wire or group of wires is labeled using color codes, tags, or printed markers. This makes installation, inspection, and troubleshooting much easier, especially in complex systems with many connections.

Testing and validation are also part of wire harness techniques. After assembly, harnesses are tested for continuity, insulation resistance, and correct connectivity. Advanced techniques may include signal integrity testing, load testing, and thermal analysis to ensure that the harness performs reliably under real operating conditions.

Wire Safety in Vehicles

Electrical wiring plays a critical role in modern vehicles, connecting various systems such as the engine control unit, lighting, sensors, infotainment, and safety mechanisms. Ensuring wire safety in vehicles is essential to prevent electrical failures, reduce fire hazards, and maintain reliable operation under harsh conditions. Automotive environments expose wiring systems to vibration, heat, moisture, chemicals, and mechanical stress, making safety considerations a top priority in design and installation.

One of the primary aspects of wire safety is **proper insulation and protection**. Automotive wires are covered with high-quality insulating materials that can withstand elevated temperatures, oil exposure, and abrasion. Standards such as **ISO 6722** define the requirements for insulation thickness, temperature ratings, and durability. Additional protective layers like corrugated tubes, sleeves, and conduits are often used to shield wires from mechanical damage and environmental factors.

Another important factor is **correct wire sizing and current capacity**. Each wire must be selected based on the amount of current it carries to avoid overheating. Undersized wires can lead to excessive heat generation due to electrical resistance, which may damage insulation or even cause fire. Proper design ensures that wires operate within safe limits, taking into account factors such as ambient temperature and load conditions.

Routing and securing of wires is also crucial for safety. Wires must be routed away from sharp edges, moving parts, and high-temperature areas such as the engine or exhaust system. Secure fastening using clips, clamps, and ties prevents unnecessary movement and vibration, which can cause wear and eventual failure. Proper routing also reduces the risk of short circuits caused by insulation damage.

Protection against electrical faults is achieved through the use of fuses, circuit breakers, and relays. These components are designed to interrupt the flow of current in case of overload or short circuit conditions, thereby protecting the wiring system and connected devices. Without such protection, faults could lead to severe damage or hazardous situations.

Shielding and grounding are important for maintaining signal integrity and safety in electronic systems. Modern vehicles contain numerous electronic control units and communication networks. Shielded cables and proper grounding techniques help reduce electromagnetic interference, ensuring that signals are transmitted accurately without affecting critical systems such as braking or engine control.

Another key aspect is **environmental resistance**. Vehicle wiring must withstand exposure to moisture, dust, chemicals, and temperature variations. Waterproof connectors, sealed terminals, and corrosion-resistant materials are used to enhance durability and prevent failures caused by environmental conditions.

Regular **inspection and maintenance** also contribute to wire safety. Over time, wires may degrade due to aging, heat, or mechanical stress. Periodic checks help identify issues such as cracks in insulation, loose connections, or corrosion, allowing timely repairs before serious problems occur.

Finally, adherence to industry standards and best practices ensures that automotive wiring systems meet safety and performance requirements. Following established guidelines during design, manufacturing, and installation reduces risks and improves overall reliability.

Challenges in Wire Harness Systems

Wire harness systems are essential for the proper functioning of electrical and electronic systems, but they also present several challenges in design, manufacturing, installation, and maintenance. As modern systems become more complex, especially in automotive and industrial applications, these challenges become increasingly significant and require careful consideration.

One of the primary challenges is **increasing system complexity**. Modern vehicles and electronic systems contain a large number of sensors, control units, and communication networks, all of which require extensive wiring. This results in bulky and complex wire harnesses that are difficult to design, manage, and troubleshoot. As the number of connections increases, so does the probability of faults such as incorrect wiring or signal interference.

Another major challenge is **space constraints**. In many applications, particularly in automobiles and compact electronic devices, available space is limited. Designing a wire harness that fits within confined spaces while maintaining proper routing and safety distances is a difficult task. Poor space management can lead to tightly packed wires, which may increase the risk of overheating, mechanical stress, and difficulty in maintenance.

Weight considerations also pose a challenge, especially in automotive and aerospace industries. Wire harnesses can contribute significantly to the overall weight of a system. Excess weight can reduce fuel efficiency in vehicles and affect performance. Therefore, designers must balance the need for robust wiring with the requirement to minimize weight, often by optimizing wire sizes and using lightweight materials.

Environmental factors are another critical challenge. Wire harnesses are often exposed to harsh conditions such as high temperatures, moisture, dust, chemicals, and vibrations. These conditions can degrade insulation, corrode connectors, and weaken mechanical integrity over time. Ensuring that the harness can withstand such environments requires careful selection of materials and protective measures.

Electrical interference and signal integrity issues are also important concerns. In systems where both power and data signals are transmitted through the harness, electromagnetic interference (EMI) can affect signal quality. Improper routing or lack of shielding can lead to noise, signal distortion, or data loss, which can compromise system performance.

Manufacturing and assembly challenges include maintaining consistency and accuracy during production. Wire harness assembly often involves manual processes such as cutting, stripping, crimping, and bundling. Human errors during these processes can lead to defects, increasing the need for quality control and testing. Automation can help, but it may increase cost and complexity.

Maintenance and troubleshooting difficulties are also significant. Due to the dense and bundled nature of wire harnesses, identifying faults such as broken wires or loose connections can be time-

consuming and challenging. This can lead to increased downtime and higher maintenance costs, especially in critical systems.

Finally, **cost constraints** play an important role. While high-quality materials and advanced manufacturing techniques improve reliability, they also increase the overall cost of the wire harness. Designers must find a balance between performance, reliability, and affordability to meet practical requirements.

Literature Review

According to J. Smith and R. Brown (2018), wire harness systems are essential components in modern electrical and electronic applications, providing organized transmission of power and signals between different subsystems. Their study emphasizes that proper design and maintenance of wire harnesses are critical for ensuring system reliability and safety. The authors highlight that faults such as open circuits, short circuits, and insulation failures can significantly impact system performance and may lead to complete system failure if not detected early.

According to A. Kumar and S. Patel (2020), traditional wire harness testing methods such as continuity testing and visual inspection are widely used due to their simplicity and low cost. However, these methods are time-consuming and highly dependent on human accuracy. The study points out that manual testing techniques are not capable of identifying advanced faults such as high resistance connections or signal degradation, which has led to the need for automated diagnostic systems.

According to L. Wang et al. (2019), signal integrity plays a crucial role in modern electrical systems, especially where high-speed data transmission is involved. Their research focuses on propagation delay and signal distortion as key indicators of wire quality. The study explains that increased propagation delay may indicate poor connections, degraded conductors, or उच्च resistance paths. The authors conclude that incorporating signal integrity analysis improves the accuracy of fault detection in wiring systems.

According to D. Johnson (2019), advanced fault detection techniques such as Time Domain Reflectometry (TDR) are highly effective in identifying faults in cable systems. TDR works by sending a signal through the wire and analyzing reflections caused by discontinuities. Although the method provides precise fault location, the study highlights that it is expensive and complex, making it unsuitable for low-cost and small-scale applications.

According to Allegro Microsystems (2017), the ACS712 Hall-effect current sensor is widely used for current measurement in embedded systems. The study explains that the sensor provides electrical isolation and can measure both AC and DC currents. It converts the magnetic field generated by current flow into a proportional voltage output. The authors emphasize that current measurement is essential for detecting overcurrent conditions and evaluating the load-carrying capacity of electrical wires.

According to M. Chen and Y. Li (2018), thermal analysis is an important factor in assessing the performance and reliability of electrical conductors. Their research explains that when current flows through a wire, heat is generated due to electrical resistance, which can be described using Joule's law:

$$P = I^2 R$$

The study highlights that excessive heat can degrade insulation, reduce efficiency, and lead to potential hazards. The authors recommend continuous temperature monitoring using digital sensors to prevent overheating and ensure safe operation.

According to S. Lee et al. (2021), combining current and temperature monitoring provides a more comprehensive understanding of wire performance under real operating conditions. Their findings suggest that systems that integrate electrical and thermal analysis are more effective in detecting hidden faults compared to systems that rely on a single parameter.

According to Espressif Systems (2021), embedded platforms such as ESP32 offer high-speed processing and precise timing capabilities, making them suitable for signal-based diagnostics. The study highlights that microcontrollers can be programmed to perform automated testing, reducing human intervention and improving accuracy. Similarly, Arduino-based systems are widely used for sensor interfacing due to their stable analog input capabilities.

According to R. Gupta and P. Sharma (2022), automated wire harness testing systems significantly improve efficiency and reliability compared to manual methods. Their research demonstrates that microcontroller-based systems can perform multiple tests simultaneously, including continuity verification, fault detection, and signal analysis. However, the study also notes that many existing systems lack the ability to analyze thermal behavior under load conditions.

According to K. Mehta et al. (2020), one of the major challenges in wire harness diagnostics is the lack of integrated systems that combine electrical, signal, and thermal analysis. The authors emphasize that most existing solutions focus only on continuity testing, which provides limited information about the actual condition of the wire. They suggest that future systems should incorporate multiple testing techniques to achieve comprehensive diagnostics.

According to N. Verma and S. Iyer (2021), embedded diagnostic systems are becoming increasingly important in industrial and automotive applications. Their study highlights that real-time monitoring and data analysis improve system reliability and reduce maintenance costs. The authors also point out that cost-effective solutions using microcontrollers and sensors are gaining popularity due to their scalability and ease of implementation.

According to T. Anderson (2019), environmental factors such as temperature, vibration, and moisture significantly affect the performance of wire harness systems. The study explains that prolonged exposure to harsh conditions can lead to insulation degradation and mechanical failure. Proper testing and monitoring techniques are necessary to ensure long-term reliability.

According to P. Singh and A. Rao (2023), the integration of multiple diagnostic parameters, including signal integrity, current measurement, and thermal monitoring, provides a more accurate evaluation of wire harness systems. Their research concludes that such integrated approaches are essential for modern applications where safety and reliability are critical.

According to B. Reis et al. (2024), modern automotive wire harness systems have evolved significantly due to the rapid development of electric and autonomous vehicles. Their study emphasizes that wire harnesses are no longer simple wiring structures but have become safety-critical components responsible for both power distribution and signal transmission. The authors highlight the importance of simulation-based design, which allows engineers to analyze harness performance before physical implementation, thereby improving reliability and reducing design errors.

According to Shengrui Yuan et al. (2021), reliability design plays a crucial role in wire harness systems, particularly in automotive applications. The study proposes integrating reliability requirements directly into the design phase to minimize defects and improve long-term performance. The authors suggest that improper design can lead to failures such as insulation breakdown, connector faults, and प्रणाली instability, which can affect the overall safety of the system.

According to Ioana Stefan Iorga et al. (2021), the increasing complexity of automotive systems has made wire harness manufacturing and assembly more challenging. Their research focuses on optimizing assembly processes to improve efficiency and reduce production time. The study highlights that modern vehicles require complex wiring systems to support advanced features such as multimedia systems and safety controls, which increases the importance of efficient manufacturing techniques.

According to Nguyen et al. (2021), automation in wire harness manufacturing is becoming essential due to the growing demand for high-quality and reliable systems. The study explains that automated manufacturing processes improve consistency, reduce human error, and ensure better quality control. Additionally, the authors note that wiring harnesses have become critical for safety functions such as braking and steering, making precision in manufacturing a key requirement.

According to recent research in Procedia CIRP (2023), wire harness assembly is still largely dependent on manual labor despite advancements in automation technologies. The study discusses the potential of collaborative robots to assist in harness assembly, improving ergonomics and efficiency. However, it also highlights challenges in fully automating the process due to the flexible and complex nature of wires.

According to Pemarathne and Fernando (2016), artificial intelligence (AI) has been increasingly used in wire routing and harness design systems. Their review shows that traditional trial-and-error design methods are being replaced by intelligent simulation tools that optimize wire layout and routing. These AI-based systems reduce design complexity and improve overall system efficiency.

According to recent advancements in inspection technologies (2025), optical coherence tomography (OCT) has been introduced as an advanced method for wire harness inspection. This technique provides high-resolution 3D imaging, allowing detailed analysis of internal structures and detection of defects that cannot be identified through conventional visual inspection methods. The study concludes that such advanced inspection methods significantly enhance diagnostic accuracy.

According to studies on automotive cable innovation (2018), lightweight wiring solutions are gaining importance in modern vehicles. Reducing the weight of wire harnesses helps improve fuel efficiency and reduce environmental impact. The research highlights that optimizing material usage without compromising performance is a key focus in current wire harness development.

According to recent research on connector technologies (2026), the reliability of wire harness systems largely depends on the quality of connector interfaces. The study compares different connection techniques such as cold crimping and ultrasonic welding, emphasizing that proper connection methods significantly improve durability and electrical performance.

According to recent AI-based research (2023–2025), deep learning techniques are being explored for automating wire harness assembly and inspection. These methods use computer vision to detect connectors and assist robotic systems in assembling harnesses with high precision. The study indicates that although promising, these technologies still face challenges in handling complex and flexible wire structures.

According to H. Kim et al. (2022), the increasing electrification of vehicles, especially in electric and hybrid systems, has significantly increased the complexity of wire harness networks. Their study explains that high-voltage wiring systems require enhanced insulation, shielding, and safety mechanisms to prevent electrical hazards. The authors highlight that improper handling of high-voltage harnesses can lead to serious safety risks, emphasizing the need for advanced testing and monitoring systems.

According to M. Zhao and L. Chen (2020), fault diagnosis in cable systems can be improved using model-based and data-driven approaches. Their research discusses the use of mathematical modeling and signal analysis techniques to detect abnormalities in wiring systems. The study concludes that combining analytical models with real-time sensor data enhances the accuracy of fault detection compared to traditional methods.

According to R. Patel et al. (2021), electromagnetic interference (EMI) is a major concern in modern wiring systems, especially in environments with multiple electronic components. The study explains that poor shielding and improper grounding can lead to signal distortion and communication errors. The authors recommend the use of twisted pair cables, shielding layers, and proper grounding techniques to minimize interference and improve signal reliability.

According to S. Banerjee and K. Das (2019), predictive maintenance techniques are increasingly being applied to electrical systems, including wire harnesses. Their research highlights the use of sensor data and machine learning algorithms to predict potential failures before they occur. This approach reduces downtime and maintenance costs while improving system reliability.

According to T. Müller et al. (2023), digital twins are emerging as a powerful tool in the design and monitoring of wire harness systems. A digital twin is a virtual model of a physical system that can simulate real-time behavior. The study demonstrates that digital twins can be used to monitor wire

performance, detect faults, and optimize system design without physical testing, thereby improving efficiency and reducing development time.

According to J. Alvarez and P. Gomez (2022), environmental stress testing is essential for evaluating the durability of wire harness systems. Their study examines the effects of temperature cycling, vibration, and humidity on wiring performance. The results indicate that prolonged exposure to harsh conditions can cause insulation degradation and connector failure, highlighting the importance of robust testing methods.

According to Y. Nakamura et al. (2021), miniaturization of electronic systems has led to increased challenges in wire harness design. The study explains that compact designs require careful routing and bundling of wires to avoid overheating and interference. The authors emphasize that advanced design tools and simulation techniques are necessary to address these challenges.

According to K. Reddy and V. Prakash (2020), real-time monitoring systems using embedded sensors provide significant advantages in wire harness diagnostics. Their research shows that continuous monitoring of parameters such as current, voltage, and temperature enables early detection of faults and improves system safety. The study highlights that such systems are particularly useful in critical applications like automotive and aerospace industries.

According to L. Fernandez et al. (2022), advancements in materials science have led to the development of high-performance insulation materials for wire harnesses. These materials offer improved thermal resistance, flexibility, and durability compared to traditional insulation. The study suggests that the use of advanced materials can significantly enhance the lifespan and reliability of wiring systems.

According to P. Roy and S. Ghosh (2021), connector reliability is a key factor affecting the overall performance of wire harness systems. Their study analyzes different types of connector failures, including corrosion, loosening, and संपर्क resistance. The authors conclude that proper design, material selection, and maintenance are essential to ensure reliable connections.

According to A. Singh et al. (2023), smart diagnostic systems using Internet of Things (IoT) technology are becoming increasingly popular in wire harness monitoring. These systems enable remote monitoring and data analysis, allowing users to track system performance in real time. The study highlights that IoT-based systems improve fault detection and reduce the need for manual inspection.

According to D. White (2019), thermal imaging techniques can be used for non-contact monitoring of wire temperature. This method allows detection of hotspots and abnormal heating without physically touching the wire. The study concludes that thermal imaging is a useful tool for preventive maintenance and safety analysis.

3. Methodology

3.1 Introduction

This project presents the design and development of an automated wire harness diagnostic system aimed at improving the accuracy, speed, and reliability of wire testing. Conventional testing methods are often manual, time-consuming, and limited in detecting advanced faults such as signal delay, high resistance connections, and thermal issues. To address these limitations, the proposed system integrates embedded technologies to perform a comprehensive analysis of wire harness conditions.

The system is designed using two functional modules, each dedicated to a specific type of testing. The first module utilizes an ESP32 microcontroller programmed in MicroPython to perform signal integrity and continuity testing. It verifies proper connections between wires and measures propagation delay using high-resolution timing, enabling the detection of faults such as open circuits, incorrect wiring, and abnormal delays.

The second module is developed using an Arduino Nano, focusing on electrical load and thermal analysis. In this module, a controlled load is applied to the wire through a MOSFET switching circuit and a power resistor. The current flowing through the wire is measured using an ACS712 current sensor, while the temperature is monitored using a DS18B20 digital temperature sensor. This setup allows evaluation of the wire's performance under load conditions and helps identify overheating and excessive current flow.

Both modules operate independently while contributing to a unified diagnostic process. Real-time feedback is provided through display units, where an OLED display presents signal testing results and an LCD shows current and temperature values. The system is capable of identifying various faults, including open circuits, short circuits, high resistance paths, and thermal abnormalities, ensuring a reliable and efficient testing mechanism.

3.2 Overview of the Proposed System

The proposed system is an automated diagnostic setup designed to assess both the electrical and physical performance of wire harnesses. It combines signal-based testing with load-based analysis to provide a complete evaluation of wire integrity and operational reliability.

The signal testing subsystem, based on the ESP32, transmits electrical signals through individual wires in the harness and monitors corresponding inputs to verify correct connections. It also measures signal propagation delay, which helps in identifying issues such as discontinuities, गलत connections, and degraded signal paths. The results are displayed on an OLED screen for immediate interpretation.

The load testing subsystem, implemented using the Arduino Nano, evaluates the behavior of the wire under practical operating conditions. A controlled load is applied using a MOSFET and a power resistor, while the ACS712 sensor measures current flow and the DS18B20 sensor records temperature

variations. This enables analysis of current-carrying capacity and thermal performance, which are critical indicators of wire quality.

3.3 Block Diagram

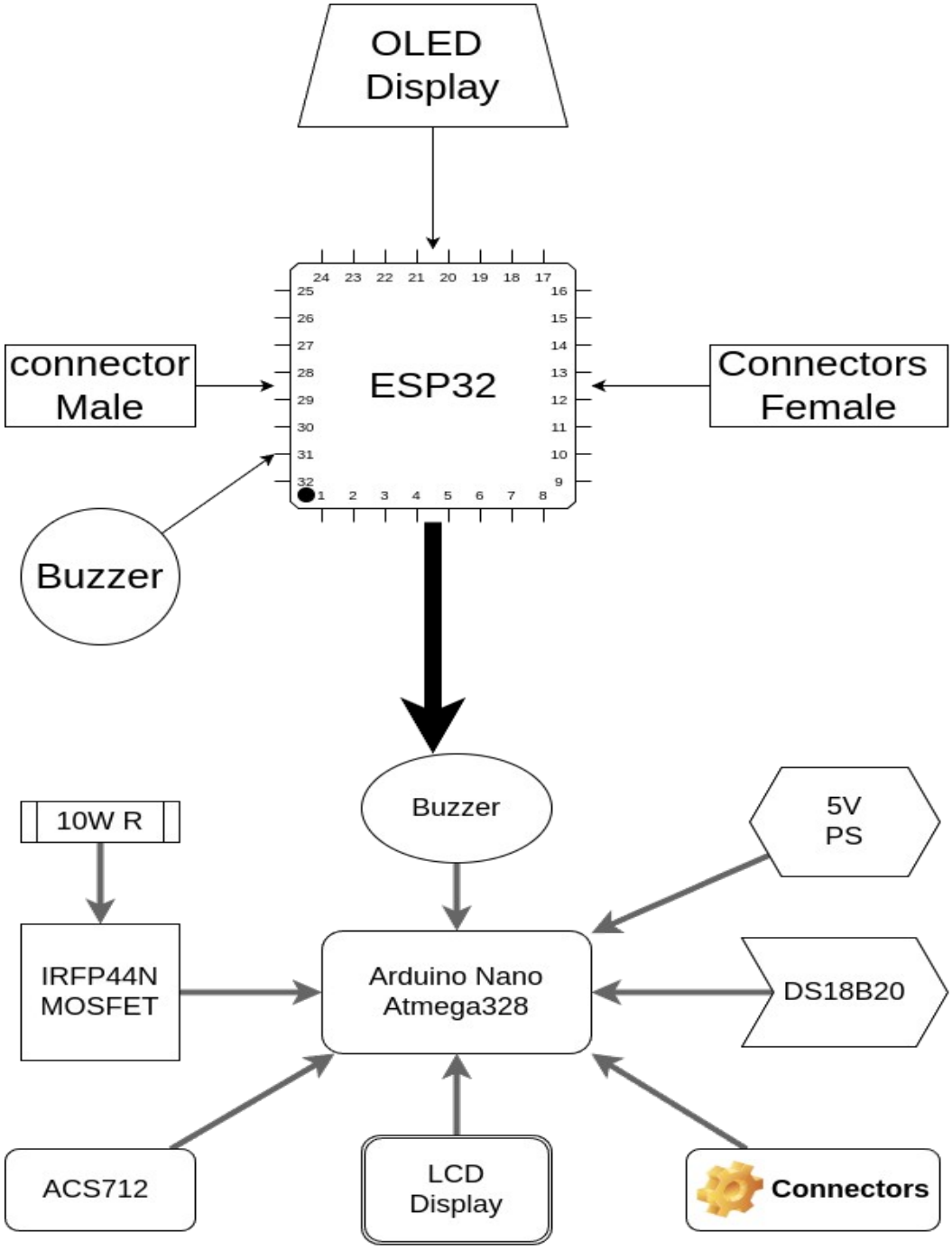

Fig 3.1: Block Diagram

The block diagram represents the overall architecture of the proposed wire harness diagnostic system. It is divided into two main sections: the **signal testing unit (ESP32-based)** and the **load and thermal testing unit (Arduino Nano-based)**. Each component in the diagram plays a specific role in ensuring accurate and reliable wire harness analysis.

At the top of the system, the **OLED display** is connected to the ESP32 microcontroller. This display provides real-time feedback for signal integrity testing, showing results such as connection status, propagation delay, and fault indications. The ESP32 is interfaced with both **male and female connectors**, through which the wire harness under test is connected. The ESP32 sends signals through the output pins and receives them through corresponding input pins to verify correct wiring.

A **buzzer** is also connected to the ESP32 section to provide audible alerts during testing. It indicates conditions such as pass, fail, or warning, improving user interaction without requiring constant visual monitoring.

The lower section of the block diagram represents the **load testing unit**, centered around the Arduino Nano (ATmega328). This unit is responsible for analyzing the electrical and thermal performance of the wire. A **5V power supply** provides the necessary operating voltage for the Arduino and associated components.

A **MOSFET (IRFP150N)** is used as a switching device to control the application of load across the wire harness. The load is provided by a **10W power resistor**, which simulates real operating conditions by drawing current through the wire. The **ACS712 current sensor** is connected in series to measure the current flowing through the circuit.

For temperature monitoring, a **DS18B20 sensor** is used to measure the heat generated in the wire during load testing. This helps in identifying overheating conditions and evaluating the current-carrying capability of the wire.

The Arduino Nano processes the current and temperature data and displays the results on a **16x2 LCD display**. A second **buzzer** is also included in this section to provide alerts for abnormal conditions such as excessive current or high temperature.

Connectors are used in both sections to interface the wire harness with the system, ensuring proper and flexible connections during testing.

3.4 Workflow of the System

The workflow of the proposed wire harness diagnostic system describes the sequence of operations carried out to evaluate the condition of the wire harness. The process is divided into two main stages: signal testing and load/thermal testing. Each stage operates systematically to detect different types of faults and provide accurate results.

The process begins with the initialization of both controllers. The ESP32 initializes the OLED display and configures the input and output pins for signal testing. At the same time, the Arduino Nano initializes the LCD display, current sensor (ACS712), temperature sensor (DS18B20), and the MOSFET-based load circuit.

In the first stage, the ESP32 performs signal integrity testing. It sends a digital signal through each output pin connected to the wire harness. The corresponding input pin is monitored to verify whether the signal is correctly received. The time taken for the signal to travel from output to input is measured using a high-resolution timer. Based on this measurement, the system determines whether the connection is correct, absent, or experiencing high delay. The results are displayed on the OLED screen, and an alert is generated if any fault is detected.

Once signal testing is completed, the system proceeds to the second stage, which is load and thermal testing. The Arduino Nano activates the MOSFET to apply a controlled load across the wire using a power resistor. As current flows through the wire, the ACS712 sensor continuously measures the current, while the DS18B20 sensor monitors the temperature of the wire.

The Arduino processes these sensor readings and displays the current and temperature values on the LCD screen in real time. If the temperature exceeds a predefined threshold or if abnormal current conditions are detected, the system triggers a buzzer alert to indicate a potential issue such as overheating or excessive load.

Throughout the operation, both stages provide continuous feedback, allowing the user to monitor the condition of the wire harness effectively. The combination of signal testing and load testing ensures that both electrical connectivity and physical performance are evaluated.

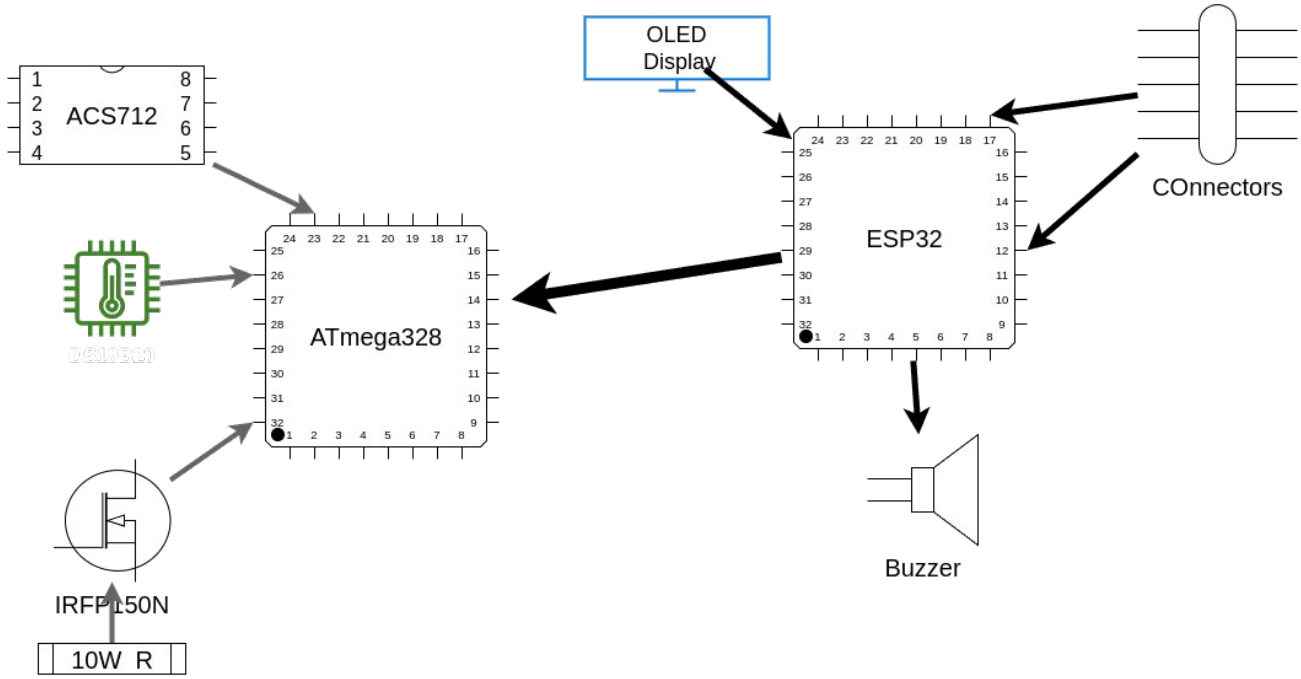

Fig 3.2: Work flow

3.5 Software and Explanation

The software of the proposed system is divided into two parts based on the hardware modules used: the ESP32 (MicroPython-based) for signal testing and the Arduino Nano (Embedded C/C++) for load and thermal analysis. Each software module is designed to perform specific tasks efficiently while providing real-time feedback through display units.

ESP32 Software (Signal Testing Module)

The ESP32 is programmed using MicroPython and is responsible for signal integrity and continuity testing. The software begins by initializing the GPIO pins as input and output, along with setting up the OLED display using the I2C protocol. A mapping between output pins and expected input pins is defined to verify correct wiring.

During execution, the ESP32 sends a digital HIGH signal through each output pin one at a time. The corresponding input pin is continuously monitored to detect the signal. A high-resolution timer is used to measure the time taken for the signal to propagate from the output to the input. This propagation delay is calculated in microseconds.

Based on the measured delay and signal detection, the system classifies the result into three categories:

- **PASS**: Signal received within acceptable delay
- **FAIL**: No signal detected (open circuit or wrong connection)
- **WARNING**: Signal detected but with high delay (possible high resistance or poor connection)

The results are displayed on the OLED screen for each wire under test. The software also includes timeout conditions to prevent indefinite waiting in case of signal failure. This module ensures fast and accurate detection of wiring faults.

Arduino Nano Software (Load and Thermal Module)

The Arduino Nano is programmed using Embedded C in the Arduino IDE and is responsible for analyzing the wire under load conditions. The software initializes the ACS712 current sensor, DS18B20 temperature sensor, LCD display, and MOSFET control pin.

During operation, the Arduino activates the MOSFET to apply a load through a power resistor across the wire. The ACS712 sensor reads the current flowing through the wire by converting analog voltage into current values. The DS18B20 sensor measures the temperature of the wire digitally.

The software continuously reads and processes these sensor values. Current is calculated using calibration parameters such as sensitivity and offset voltage, while temperature is obtained directly from the sensor. The readings are displayed on the LCD in real time, showing time, current, and temperature.

The system also includes condition checks:

- If temperature exceeds a predefined threshold, it indicates overheating

- If current exceeds safe limits, it indicates overcurrent condition

In such cases, a buzzer alert is triggered to notify the user. The software ensures stable readings by incorporating small delays and proper sensor handling techniques.

3.6 Hardware Explanation

ESP32-WROOM Module

The ESP32-WROOM is a powerful and versatile microcontroller module used in the proposed system for signal integrity and continuity testing. It is based on a dual-core processor with integrated Wi-Fi and Bluetooth capabilities, making it suitable for high-speed and real-time applications. In this project, the ESP32-WROOM is primarily utilized for its fast processing speed and precise timing features, which are essential for measuring signal propagation delay.

The ESP32 operates at a clock frequency of up to 240 MHz and includes multiple General Purpose Input/Output (GPIO) pins. These GPIO pins are used to interface with the wire harness under test. In the system, selected GPIO pins are configured as output pins to send signals, while others are configured as input pins to receive signals. This configuration allows the ESP32 to verify the continuity and correctness of each wire connection.

One of the key advantages of the ESP32-WROOM module is its ability to perform high-resolution timing operations. Using internal timers, the system measures the time taken for a signal to travel from an output pin to the corresponding input pin. This enables detection of propagation delays, which can indicate issues such as high resistance, poor connections, or degraded wiring.

The ESP32 is also interfaced with an OLED display using the I2C communication protocol. The display provides real-time output of test results, including connection status and delay measurements. This improves user interaction by offering clear and immediate feedback during testing.

Additionally, the ESP32 supports MicroPython programming, which simplifies code development and debugging. The use of MicroPython allows for rapid implementation of logic, easy handling of GPIO operations, and efficient control of peripherals.

Arduino Nano (ATmega328)

The Arduino Nano is a compact and efficient microcontroller board based on the ATmega328 microcontroller. In the proposed system, it is used for load and thermal analysis of the wire harness. The Arduino Nano is well-suited for this application due to its stable analog-to-digital conversion, ease of interfacing with sensors, and reliable performance in embedded systems.

The ATmega328 microcontroller operates at a clock frequency of 16 MHz and provides multiple input/output pins, including analog input pins. These analog pins are particularly important in this system, as they are used to read the output from the ACS712 current sensor. The built-in Analog-to-Digital Converter (ADC) converts the analog voltage from the sensor into digital values, which are then processed to calculate the current flowing through the wire.

The Arduino Nano is also interfaced with the DS18B20 temperature sensor, which provides digital temperature readings. This sensor communicates using a one-wire protocol, allowing accurate measurement of the wire's temperature during load testing. The Arduino processes this data to monitor thermal conditions and detect overheating.

A MOSFET switching circuit is controlled by the Arduino Nano to apply a load across the wire harness. By turning the MOSFET on and off, the system can control the flow of current through a power resistor, simulating real operating conditions. This enables evaluation of the wire's current-carrying capacity and thermal performance.

The processed data, including current and temperature values, is displayed on a 16x2 LCD using I2C communication. This provides real-time monitoring for the user. Additionally, a buzzer is connected to the Arduino to generate alerts when abnormal conditions such as excessive current or high temperature are detected.

The Arduino Nano is programmed using the Arduino IDE with Embedded C/C++, which allows efficient implementation of sensor reading, data processing, and control logic. Its simplicity, reliability, and compatibility with various sensors make it an ideal choice for the load testing module.

ACS712 Current Sensor (30A Module)

The ACS712 is a Hall-effect-based current sensor used to measure both AC and DC current in electrical circuits. In this project, the 30A variant of the ACS712 is used to monitor the current flowing through the wire harness during load testing. This sensor is widely used due to its simplicity, electrical isolation, and ability to provide real-time current measurements.

The ACS712 operates on the principle of the Hall effect, where a magnetic field generated by the current-carrying conductor is detected and converted into a proportional voltage output. One of the key advantages of this sensor is that it provides **electrical isolation** between the sensing circuit and the microcontroller, improving safety and protecting the system from high current paths.

The sensor has three main terminals: VCC, GND, and VOUT. It is typically powered with 5V, and the output voltage is centered around 2.5V when no current is flowing. As current increases in the positive direction, the output voltage rises above 2.5V, and for negative current, it decreases below 2.5V. This makes it suitable for bidirectional current measurement.

For the 30A version, the sensitivity is approximately **66 mV/A**, meaning that for every 1 ampere of current, the output voltage changes by 0.066V. The Arduino Nano reads this analog voltage using its

ADC and converts it into a digital value. By subtracting the offset voltage (2.5V) and dividing by the sensitivity, the actual current is calculated.

During operation, the ACS712 is connected in series with the load circuit, allowing it to continuously monitor the current flowing through the wire harness. The measured current values are used to evaluate the wire's current-carrying capability and detect abnormal conditions such as overcurrent.

The sensor provides fast response time and reasonable accuracy for general-purpose applications. However, it may be affected by noise and slight offset variations, so proper calibration and filtering techniques are often applied in the software to improve accuracy.

OLED Display

The OLED display used in the system is based on the SSD1306 controller, which is a compact and efficient display module commonly used in embedded applications. It operates using the I2C communication protocol, requiring only two wires (SDA and SCL) for data transmission, which reduces wiring complexity and saves GPIO pins on the ESP32.

The OLED display typically has a resolution of 128×64 pixels and provides clear, high-contrast output. Unlike traditional displays, OLED technology does not require a backlight, as each pixel emits its own light. This results in better visibility, especially in low-light conditions, and lower power consumption.

In this project, the OLED is interfaced with the ESP32 and is used to display the results of signal integrity testing. It shows information such as connection status (PASS/FAIL), propagation delay in microseconds, and testing progress. The fast refresh rate of the OLED makes it suitable for real-time display of rapidly changing values during signal testing.

The I2C interface simplifies communication, allowing the ESP32 to send commands and data efficiently using only two pins. This makes the OLED display an ideal choice for compact and efficient system design.

16×2 LCD Display with I2C Module

The 16×2 LCD display is used in the system to present current and temperature readings from the load testing module. It is interfaced with the Arduino Nano using an I2C module, which converts the parallel communication of the LCD into serial communication, thereby reducing the number of required connection pins.

The LCD consists of 2 rows and 16 columns, allowing it to display alphanumeric characters. It is suitable for displaying numerical data such as current (in amperes), temperature (in degrees Celsius), and time. The I2C module typically uses an address (commonly 0x27 or 0x3F), which is configured in the software.

In this system, the LCD provides real-time monitoring of parameters such as elapsed time, current flowing through the wire, and temperature of the wire. It also displays status messages like "OK" or

"HOT" based on the measured values. This helps the user easily understand the condition of the wire during load testing.

The use of I2C communication reduces wiring complexity and allows efficient data transfer between the Arduino Nano and the display. Although the LCD is slower compared to OLED, it is sufficient for displaying slowly changing parameters such as current and temperature

3.7 Code Explanation

ESP32 Code (Signal Integrity Testing)

1. Importing Required Libraries

```
from machine import Pin, I2C

from utime import sleep_ms

from time import ticks_us, ticks_diff

import ssd1306
```

This section imports necessary libraries:

- Pin → to control GPIO pins
- I2C → to communicate with OLED
- ticks_us() → for microsecond timing
- ssd1306 → OLED display driver

2. OLED Initialization

```
i2c = I2C(0, scl=Pin(22), sda=Pin(21))

oled = ssd1306.SSD1306_I2C(128, 64, i2c)
```

- Initializes I2C communication
- Connects OLED display (128×64)
- Enables real-time result display

3. Display Function

```
def oled_print(line1="", line2="", line3="", line4=""):

    oled.fill(0)

    oled.text(line1, 0, 0)
```

```
    oled.text(line2, 0, 16)
    oled.text(line3, 0, 32)
    oled.text(line4, 0, 48)
    oled.show()
```

- Clears display and prints up to 4 lines
- Used to show:
    - Test status
    - Delay
    - Errors

4. Pin Configuration

```
outPin = [15,2,4,16,17,5,18,19,23]
inPin  = [13,12,14,27,26,25,33,32,34]

opins = [Pin(i, Pin.OUT) for i in outPin]
ipins = [Pin(i, Pin.IN, Pin.PULL_DOWN) for i in inPin]
```

- Defines output and input pins
- Output pins send signals
- Input pins receive signals

5. Expected Mapping

```
expected = {
    15:33, 2:27, 4:14, 16:32, 17:26,
    5:12, 18:34, 19:25, 23:13
}
```

- Defines correct wire connections
- Used to validate wiring

6. Delay Measurement Function

```
def delay_test(out_gpio, in_gpio, timeout_us=2000):
```

```
    out_gpio.value(0)
    sleep_ms(2)

    t_start = ticks_us()
    out_gpio.value(1)

    while not in_gpio.value():
        if ticks_diff(ticks_us(), t_start) > timeout_us:
            oled_print("NO SIGNAL")
            return False

    t_end = ticks_us()
    delay = ticks_diff(t_end, t_start)

    out_gpio.value(0)

    oled_print("Delay Test", str(delay) + " us")
    return delay
```

This function:

- Sends signal from output
- Waits for input response
- Measures time delay

Conditions:

- No signal → FAIL
- Delay measured → used for analysis

7. Main Testing Loop

```
def signal_integrity_check():
```

```
for i in range(len(opins)):

    out_gpio = opins[i]
    expected_in = expected[outPin[i]]

    in_index = inPin.index(expected_in)
    in_gpio = ipins[in_index]

    delay = delay_test(out_gpio, in_gpio)

    if delay is False:
        oled_print("HARNESS FAIL")
        return

    if delay < 50:
        oled_print("PASS", str(delay)+" us")
    else:
        oled_print("WARNING", str(delay)+" us")

    sleep_ms(800)
```

- Tests each wire one by one
- Compares delay value
- Displays:
    - PASS
    - WARNING
    - FAIL

3.7.2 Arduino Code (Load & Thermal Testing)

1. Library Initialization

```
#include <OneWire.h>
#include <DallasTemperature.h>
#include <LiquidCrystal_I2C.h>
```

Used for:

- Temperature sensor (DS18B20)
- LCD display

2. Sensor Setup

```
#define ACS_PIN A2
#define ONE_WIRE_BUS 2

OneWire oneWire(ONE_WIRE_BUS);
DallasTemperature sensors(&oneWire);
LiquidCrystal_I2C lcd(0x27, 16, 2);
```

- ACS712 → current measurement
- DS18B20 → temperature measurement
- LCD → display output

3. Calibration Values

```
float sensitivity = 0.066;
float offsetVoltage = 2.5;
```

- 66 mV/A for 30A sensor
- 2.5V is zero-current reference

4. Current Measurement

```
float readCurrent() {
  int adc = analogRead(ACS_PIN);
  float voltage = adc * (5.0 / 1023.0);
  float current = (voltage - offsetVoltage) / sensitivity;
```

```
  return current;
}
```

Steps:

1. Read analog value
2. Convert to voltage
3. Convert to current

5. Temperature Measurement

```
float readTemperature() {
  sensors.requestTemperatures();
  float temp = sensors.getTempCByIndex(0);

  if (temp == DEVICE_DISCONNECTED_C) {
    return -127;
  }
  return temp;
}
```

- Reads digital temperature
- Returns error if sensor fails

6. Setup Function

```
void setup() {
  Serial.begin(9600);
  sensors.begin();

  lcd.init();
  lcd.backlight();

  startTime = millis();
}
```

- Initializes sensors
- Starts LCD
- Begins timing

7. Main Loop

```
void loop() {

  unsigned long currentTime = (millis() - startTime) / 1000;

  current = readCurrent();
  temperature = readTemperature();

  Serial.print(currentTime);
  Serial.print(", ");
  Serial.print(current);
  Serial.print(", ");
  Serial.println(temperature);
```

- Reads current and temperature
- Prints to serial for logging

8. LCD Display Output

```
  lcd.setCursor(0,0);
  lcd.print("T:");
  lcd.print(currentTime);
  lcd.print("s ");

  lcd.print("I:");
  lcd.print(current,1);
  lcd.print("A ");
```

- Displays time and current

9. Temperature Status

```
lcd.setCursor(0,1);
lcd.print("Temp:");

if (temperature == -127) {
  lcd.print("Err   ");
} else {
  lcd.print(temperature,1);
  lcd.print("C ");
}

if (temperature > 60) {
  lcd.print("HOT");
} else {
  lcd.print("OK ");
}
```

- Shows temperature
- Indicates:
    - OK
    - HOT

4. Results

The developed wire harness diagnostic system was successfully implemented and tested to evaluate its performance in detecting electrical and thermal faults. The system demonstrated reliable operation in both signal integrity testing and load-based analysis, providing accurate and real-time results.

In the signal testing phase, the ESP32 module effectively verified the continuity and correctness of wire connections. For properly connected wires, the system displayed a “PASS” status with minimal propagation delay. In cases where wires were disconnected or incorrectly connected, the system accurately identified the fault and displayed a “FAIL” message. Additionally, when connections exhibited higher-than-normal delay, the system generated a “WARNING” indication, suggesting possible issues such as high resistance or कमजोर connections. The delay measurement in microseconds provided a clear insight into signal quality, allowing differentiation between good and degraded connections.

During load testing, the Arduino Nano module successfully measured the current flowing through the wire using the ACS712 sensor. The readings were stable and consistent, allowing proper evaluation of the wire’s current-carrying capability. The DS18B20 temperature sensor effectively monitored the thermal behavior of the wire under load conditions. As the current increased, a gradual rise in temperature was observed, confirming the expected heating effect due to electrical resistance.

The system was able to identify overheating conditions when the temperature exceeded the predefined threshold. In such cases, the LCD display indicated a “HOT” status, alerting the user to potential safety risks. Under normal operating conditions, the system displayed an “OK” status, indicating safe temperature levels. This real-time monitoring ensured that both electrical and thermal parameters were continuously observed.

The integration of both modules provided a comprehensive analysis of the wire harness. While the ESP32 ensured correct connectivity and signal performance, the Arduino Nano evaluated the physical behavior of the wire under load. The combined results allowed the system to detect multiple fault conditions, including open circuits, incorrect connections, high resistance paths, excessive current flow, and overheating.

5. Conclusion

This project presented the design and implementation of an automated wire harness diagnostic system aimed at improving the efficiency, accuracy, and reliability of wire testing. The system was developed to address the limitations of conventional testing methods, which are often manual, time-consuming, and incapable of detecting advanced faults.

The proposed system successfully integrates two key testing approaches: signal integrity analysis and load-based thermal evaluation. The ESP32-based module effectively performs continuity and signal propagation testing, enabling the identification of faults such as open circuits, incorrect connections, and abnormal delays. The ability to measure propagation delay provides deeper insight into the quality of connections, allowing detection of issues that are not visible through basic testing methods.

The Arduino Nano-based module complements this by evaluating the performance of wires under load conditions. By measuring current using the ACS712 sensor and monitoring temperature using the DS18B20 sensor, the system is able to assess the current-carrying capacity and thermal behavior of the wire harness. This ensures that the wire is not only electrically correct but also physically reliable during operation.

The combined operation of both modules provides a comprehensive diagnostic solution capable of detecting a wide range of faults, including open circuits, short circuits, high resistance connections, excessive current flow, and overheating conditions. The use of OLED and LCD displays enhances user interaction by providing real-time feedback, while buzzer alerts improve usability by indicating abnormal conditions instantly.

The results obtained from the system confirm that the proposed approach significantly reduces manual effort and improves testing accuracy. The system is cost-effective, easy to implement, and adaptable to different applications, making it suitable for use in automotive, industrial, and electronic systems.

In conclusion, the developed wire harness diagnostic system provides an effective and practical solution for modern wire testing requirements. Future enhancements may include integration of both modules into a single controller, incorporation of wireless communication for remote monitoring, and the use of advanced data analysis techniques to further improve diagnostic capabilities and system performance.