Parth Dhingra

571-464-9571 | parthdhingra27@gmail.com | linkedin.com/in/parthd27 | Portfolio: parthdhingra.com

Education

George Mason University — Fairfax, VA
B.S. Mechanical Engineering — *Expected May 2029*
- GPA: 3.20
- Relevant Coursework: Calculus II, Physics I, Computer Science 112 (Python)

Technical Skills

CAD / Engineering: Onshape, SolidWorks
Programming: Python, MATLAB, Java, Arduino
Electronics: ESP32, PCB Design (EasyEDA), Sensors, Encoders, Stepper Motors, Soldering
Manufacturing: 3D Printing (FDM), Mill (drilling/tapping), Hand Tools, Woodworking, Laser Cutting

Experience

Owner — 2023 – Present
PD Ventures LLC — *Herndon, VA*
- Founded and operate a 3D-printing business designing functional products sold on Amazon, Etsy, and eBay
- Designed products in CAD and manufactured them using 3D printing and rapid prototyping
- Generated $8,000+ in revenue from 600+ orders while managing design, production, and order fulfillment

Head Mechanical Captain — 2023 – 2025
FIRST Robotics Competition Team 612 — *Chantilly, VA*
- Led a 20-person mechanical subteam in designing and manufacturing a 120 lb competition robot within the six-week build season
- Designed mechanical subsystems in CAD and coordinated fabrication using machining and additive manufacturing
- Mentored 20+ students in CAD, machining, and fabrication to develop the team's technical capabilities
- Coordinated manufacturing and scheduling within a 100-member robotics team to meet competition deadlines

Member — 2021 – 2024
Technology Student Association — *Chantilly, VA*
- Designed and fabricated CO_2 dragsters and engineering competition projects using CAD, machining, and 3D printing
- Participated in engineering competitions focused on design, prototyping, and manufacturing

Projects

4-DOF Robotic Arm | *Onshape, ESP32, Encoders, Stepper Motors, PCB Design* — Jan 2026
- Designed and built a 4-DOF robotic arm integrating mechanical structure, embedded electronics, and control software
- Implemented closed-loop joint positioning for NEMA 17 stepper-driven joints using AS5600 absolute encoders enabling repeatable multi-axis motion control
- Developed an ESP32-based WebSocket interface for simultaneous real-time control of all 4 axes with live encoder feedback
- Designed a custom ESP32 control PCB to manage multi-axis stepper motor driving and encoder feedback on a single board
- Project page: parthdhingra.com/projects/arm

Solder Fume Extractor | *Onshape, Arduino, PCB Design* — Nov 2025
- Designed and built a compact solder fume extractor that captures fumes directly at the source, improving workstation air quality
- Designed enclosure in Onshape to maximize capture efficiency using a high static-pressure fan and activated carbon filter
- Designed a custom Arduino-based PCB enabling continuous variable fan speed control from 0–100%
- Project page: parthdhingra.com/projects/solder

25:1 Cycloidal Gearbox Prototype | *Onshape, Mechanical Design, 3D Printing* — Mar 2026
- Designed a 63 mm diameter 25:1 cycloidal gearbox for robotic joint actuation targeting compact arm integration
- Generated cycloidal gear profiles and pin layouts in CAD and produced multiple FDM prototypes
- Iteratively refined geometry and tolerances to minimize backlash and achieve smooth backdrivability for robotic joint use

PARTH DHINGRA

MECHANICAL ENGINEERING AT GEORGE MASON UNIVERSITY

parthdhingra27@gmail.com
linkedin.com/in/parthd27
(571) 464 - 9571

4-DOF ROBOTIC ARM

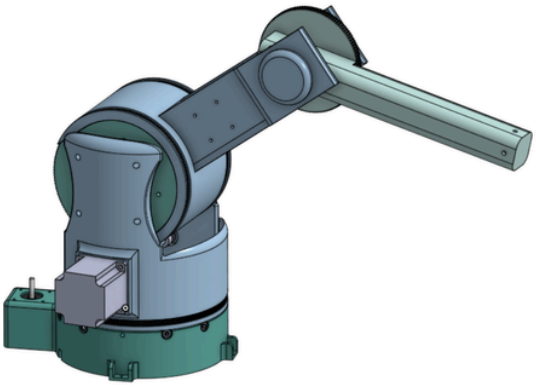

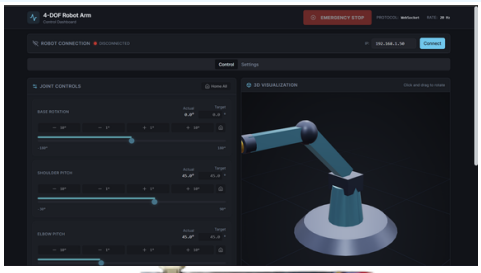

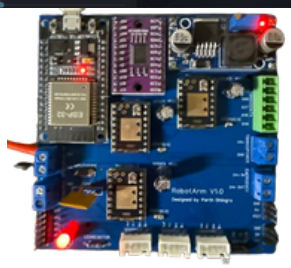

What?

- Designed and built a 4-DOF robot arm with a **custom PCB**, **stepper motors,** and a **custom web interface**
- Implemented **closed-loop joint positioning** using **absolute encoders** for **accuracy** and **repeatability**

How?

- Designed the mechanical system in **Onshape** and integrated **AS5600 encoders, an ESP32, gearing, TMC2209 drivers** and **stepper motors.**
- Built a real-time WebSocket control interface with live encoder feedback, motion tuning, and safety features

Results

- Achieved stable, repeatable joint positioning without losing accuracy under load
- Created a modular control interface adaptable to future robotic arm designs

SOLDER FUME EXTRACTOR

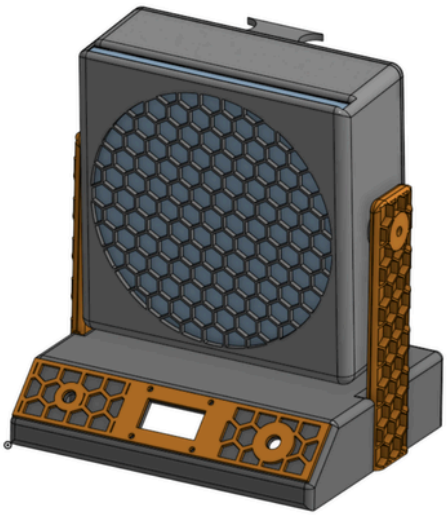

What?

- Designed and built a compact solder fume extractor that filters out harmful fumes during the soldering process.
- Goal was to create an effective and visually clean unit with high airflow and speed control.

How?

- Designed the mechanical enclosure and airflow path in **Onshape** to maximize **smoke capture efficiency**
- Integrated a high-static-pressure fan and an activated carbon filter
- Designed a **custom PCB** in **EasyEDA** that uses an **Arduino** microcontroller to handle user input and speed control

Results

- Effectively captured solder fumes at the source, improving workstation air quality
- Built a polished, compact hardware system integrating mechanics, electronics, and airflow