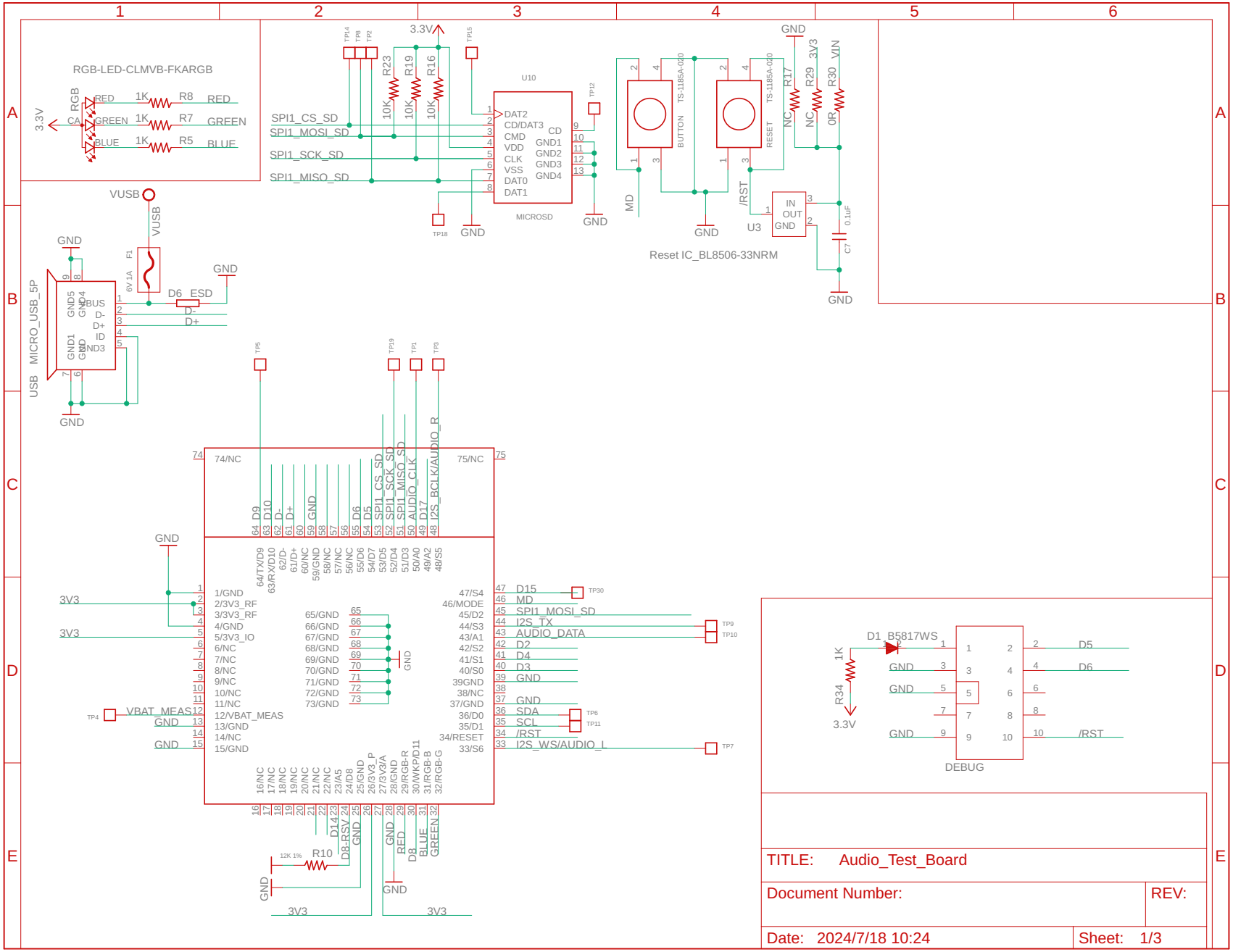

2024/7/18 10:27 f=0.80 D:\github\p2-audio-test-board\Audio_Test_Board.sch (Sheet: 1/3)

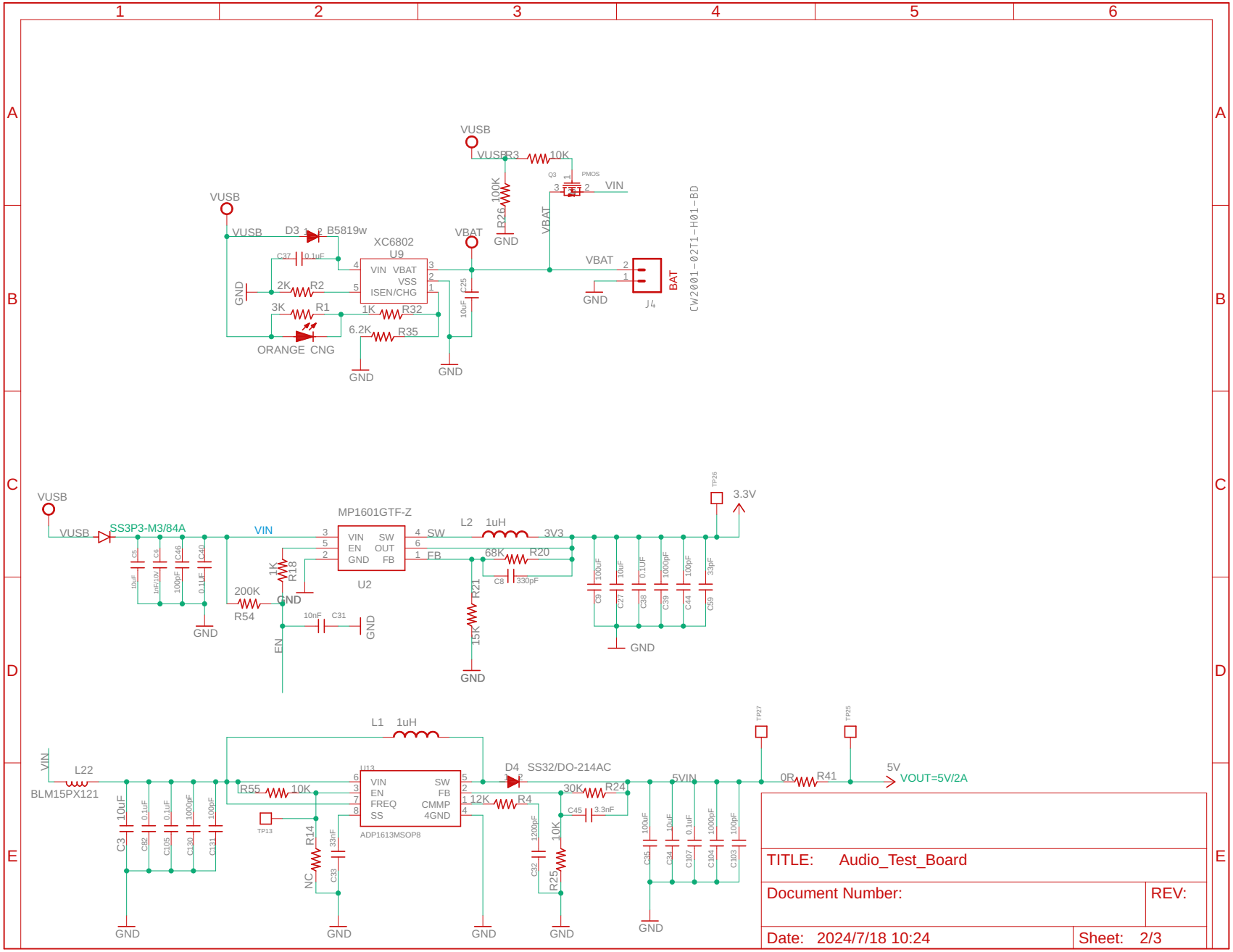

TITLE:	Audio_Test_Board
Document Number:	REV:
Date: 2024/7/18 10:24	Sheet: 2/3

2024/7/18 10:27 f=0.80 D:\github\p2-audio-test-board\Audio_Test_Board.sch (Sheet: 2/3)

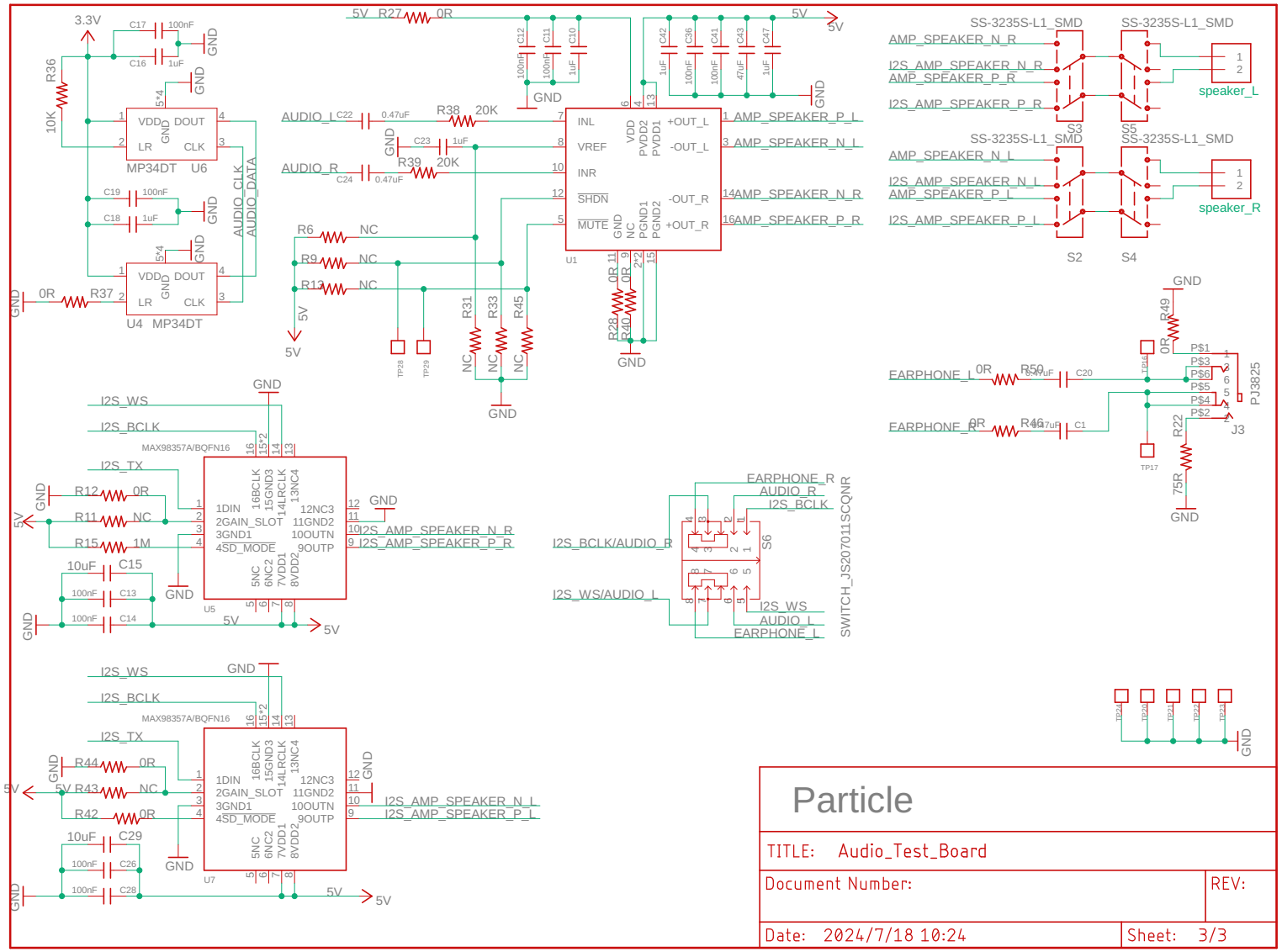

2024/7/18 10:27 f=0.80 D:\github\p2-audio-test-board\Audio_Test_Board.sch (Sheet: 3/3)