REVISIONS			
REV.	DESCRIPTION	DATE	APPROVED
A	INITIAL RELEASE FOR QUOTATION	5/3/2022	NERSESIAN

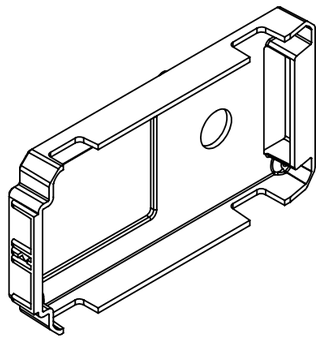

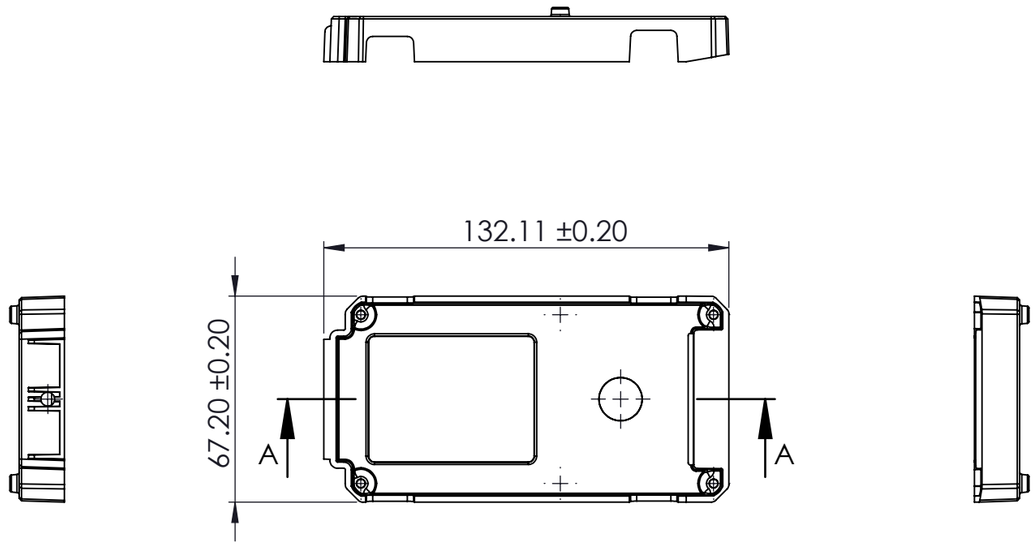

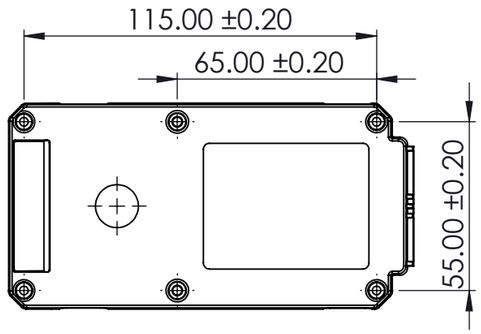

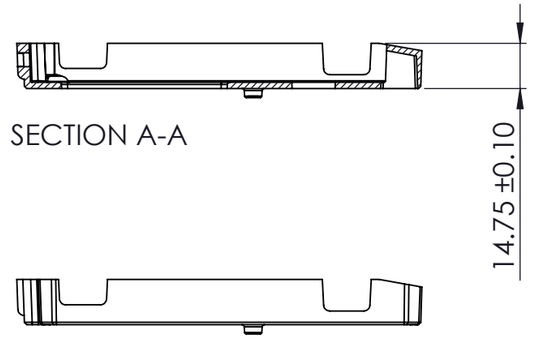

NOTES:
- CIRCLED DIMENSIONS INDICATE CRITICAL TO FUNCTION DIMENSIONS
  + SUPPLIER MUST ESTABLISH QUALITY CONTROL FOR THESE DIMENSIONS
- ALL PARTS MUST BE ROHS COMPLIANT
- ALL DIMENSIONS AND TOLERANCES INDICATE DELIVERED PART DIMENSIONS
- ALL CHANGES REQUIRE APPROVAL FROM PARTICLE INDUSTRIES INC.
- ALL COLOUR SPECIFICATIONS INDICATE DELIVERED PART COLORS

THIS DOCUMENT IS THE PROPERTY OF PARTICLE INDUSTRIES INC. AND MAY NOT BE REPRODUCED WITHOUT WRITTEN PERMISSION OR USED FOR OTHER THAN AUTHORIZED PURPOSES.

PART NAME: T1-BACKPLATE		PROJECT: MORPH	REV: A	MATERIAL	PC/ABS
				FINISH	VDI-24
PART NO	TBD	DATE 5/3/2022	TOLERANCES ±0.1	COLOR	BLACK
			DIMENSIONS MM	DO NOT SCALE DRAWING	SCALE 1:2
DESIGN	NERSESIAN	© PARTICLE INDUSTRIES INC.			SHEET 1 of 1