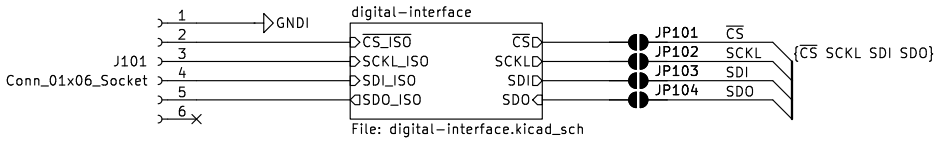

Overview

Open Battery Tester

Sheet: /

File: enclosure.kicad_sch

Title: Enclosure

Size: A4	Date: 2025−02−20	**Rev: 0.1.0**
KiCad E.D.A. 8.0.2		Id: 1/2

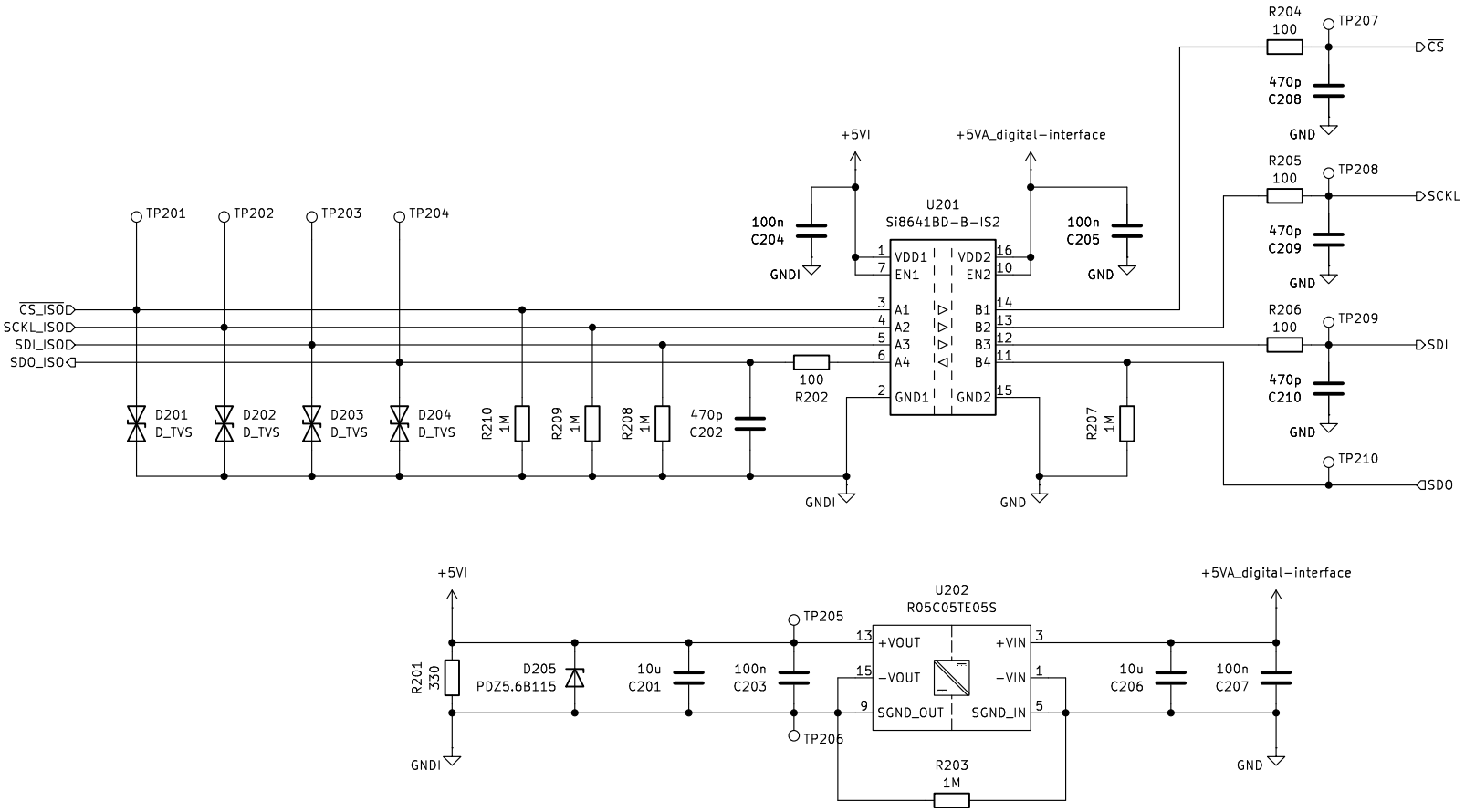

Digital Interface

Open Battery Tester

Sheet: /digital-interface/

File: digital-interface.kicad_sch

Title: Enclosure

Size: A4	Date: 2025-02-20	**Rev: 0.1.0**
KiCad E.D.A. 8.0.2		Id: 2/2