BRMS

What is Business Rule Management System ?

- A Business Rules Management System (BRMS) is a technology system used to capture decision logic as a business rule, which is then automated across applications.
- Instead of embedding rules as code within multiple applications, with a BRMS, the rules are externalized and managed away from app location code.
- This enables the logic to be leveraged by multiple applications and changed independently from the governing applications.
- Define, Deploy, Execute, Monitor and Maintain complexity of decisions
- Repository to differentiate decision logic from application code
- Tool for technical developers and business experts to define and manage decision logic
- Runtime environment to invoke decision logic through applications

Why use a Business Rules Management System?

- A BRMS empowers companies to define and maintain the rules guiding a system's decision workflow to determine what actions are enabled in any given circumstance.
- With logic outside the programming code, these systems deliver a profound boost to business agility, productivity and logic accuracy and in so doing, deliver reliable cost savings and faster rules changes when necessary.

Who Needs a Business Rules Management System?

- Rules in some form or fashion govern every vertical, sector and industry, so it's not surprising that there are strong application scenarios for a BRMS in nearly every enterprise.
- This includes:
  - Any business, organization or government entity that is governed by rules
  - Organizations with internal policies that affect staff, customers or vendors
  - Businesses wanting to improve decision making efficiency or accuracy
  - Entrepreneurs who want to respond quickly to market segment opportunities
  - Companies wanting to reduce exposure to regulatory fines

What are the advantages of Business Rules Management System?

The top benefits of a BRMS include:

- Reduces the dependency of IT Departments for rule changes
- Better control over implemented decision logic
- Repository to differentiate decision logic from application code
- Increased efficiency of process through automation
- Scales endlessly, regardless of the number or complexity of rules

What are the disadvantages of Business Rules Management System?

Some disadvantages of the BRMS include:

- Specialized skills required
- Long development lifecycle
- Integrating BRMS with vendor application

DMN

- Decision Model and Notation (DMN) is a standard published by the Object Management Group.
- It is a standard approach for describing and modeling repeatable decisions within organisations to ensure that decision models are interchangeable across organisations.
- The DMN standard provides the industry with a modeling notation for decisions that will support decision management and business rules.
- The notation is designed to be readable by business and IT users alike.
- This enables various groups to effectively collaborate in defining a decision model:
  - The business people who manage and monitor the decisions
  - The business analysts or functional analysts who document the initial decision requirements and specify the detailed decision models and decision logic
  - The technical developers responsible for the automation of systems that make the decisions

DMN

- The DMN standard can be effectively used standalone but it is also complementary to the BPMN and CMMN standards.
- BPMN defines a special kind of activity, the Business Rule Task, which "provides a mechanism for the process to provide input to a business rule engine and to get the output of calculations that the business rule engine might provide that can be used to show where in a BPMN process a decision defined using DMN should be used.

DMN Engine

- The Camunda DMN engine is a Java library which can evaluate decision tables based on the DMN 1.1 OMG standard.
- It can be used as library embedded in an application or in combination with the Camunda BPM platform.

Why to use DMN?

- Why should I use DMN anyway, I can express those rules with BPMN gateways!

Why to use DMN?

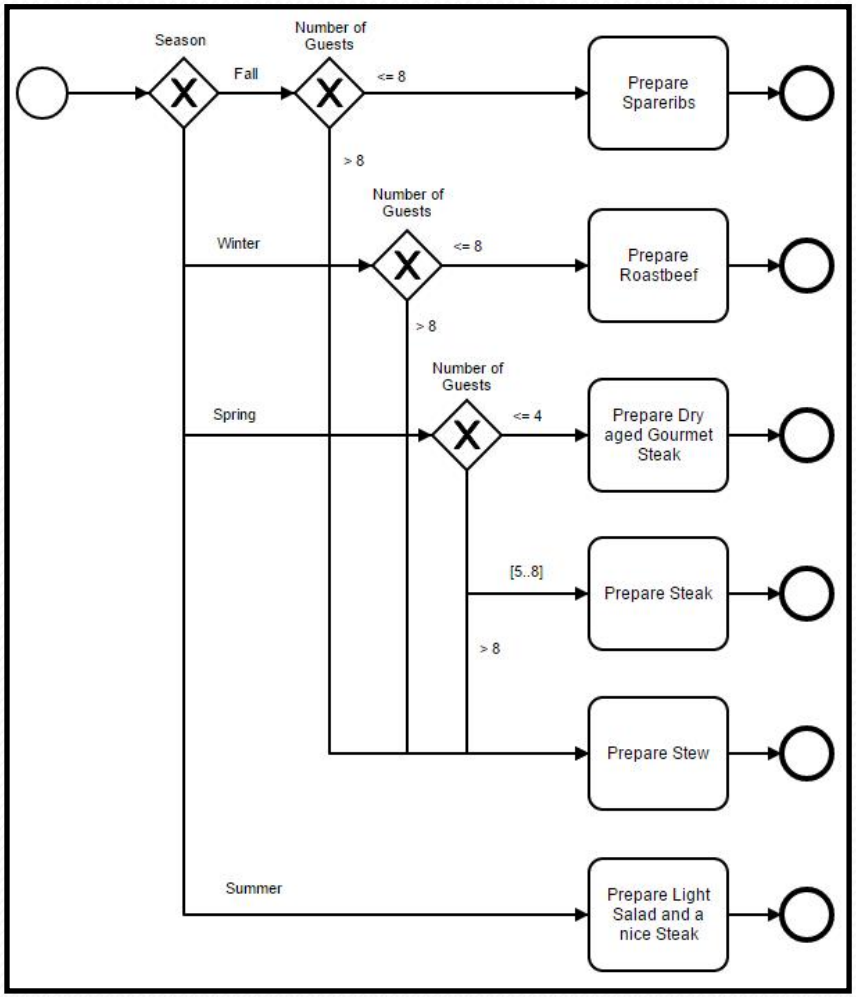

Why to use DMN?

- It's way more verbose to express rules in BPMN, especially when there are several conditions to consider.
- The diagram becomes complex and hard to maintain.
- That is why BPMN includes a so-called **business rule task**, That task refers to a decision that needs to be made, and the outcome of the decision allows the subsequent exclusive gateway to route the flow.

DMN Decision Table HIT policies

what is decision table HIT policy ? and how it works?

- Each row in a decision table is a rule.
- The columns represent inputs and, at the end, one (or occasionally more than one) output.
- Each input cell in a rule represents a true/false condition for the input:
  - Does it match a particular value, fall into a specified range, etc.? (A hyphen in the cell means the input is irrelevant in this rule; the cell value is true by default.)
  - If all input cells for the rule evaluate to true, the rule is said to match, and the output cell value is selected as the decision table output.
- Hit policy comes into play when more than one rule matches.
- In that case the rules are said to overlap, but that's not necessarily an error.
- Sometimes it's easier to create decision tables with rule overlap, and those tables rely on the hit policy to select the proper output value.

Camunda DMN HIT Policies

Single HIT

- FIRST
- ANY
- UNIQUE
- PRIORITY

Multiple HIT

- RULE ORDER
- OUTPUT ORDER
- COLLECT

Camunda DMN HIT Policies

FIRST:

- Multiple (overlapping) rules can match, with different output entries.
- The first hit by rule order is returned (and evaluation can halt).

UNIQUE:

- No overlap is possible and all rules are disjoint.
- Only a single rule can be matched.

ANY:

- There may be overlap, but all of the matching rules show equal output entries for each output, so any match can be used.
- If the output entries are non-equal, the hit policy is incorrect and the result will be empty and marked as failed.
- When strict mode is disabled the last valid rule be the result.
- The violation will be present as a validation message

Camunda DMN HIT Policies

PRIORITY:

- Multiple rules can match, with different output entries.
- This policy returns the matching rule with the highest output priority.
- Output priorities are specified in the ordered list of output values, in decreasing order of priority.
- When strict mode is disabled and there are no output values defined the first valid rule be the result.
- The violation will be present as a validation message

RULE ORDER:

- Multiple rules can be satisfied.
- The decision table result contains the output of all satisfied rules in the order of the rules in the decision table.

Camunda DMN HIT Policies

COLLECT:

- HIT Policy Collect is multiple HIT policy.
- Multiple rules can be satisfied.
- The decision table result contains the output of all satisfied rules in an arbitrary order as a list.
  - + (sum): the result of the decision table is the sum of all the distinct outputs.
  - < (min): the result of the decision table is the smallest value of all the outputs.
  - > (max): the result of the decision table is the largest value of all the outputs.
  - # (count): the result of the decision table is the number of distinct outputs.