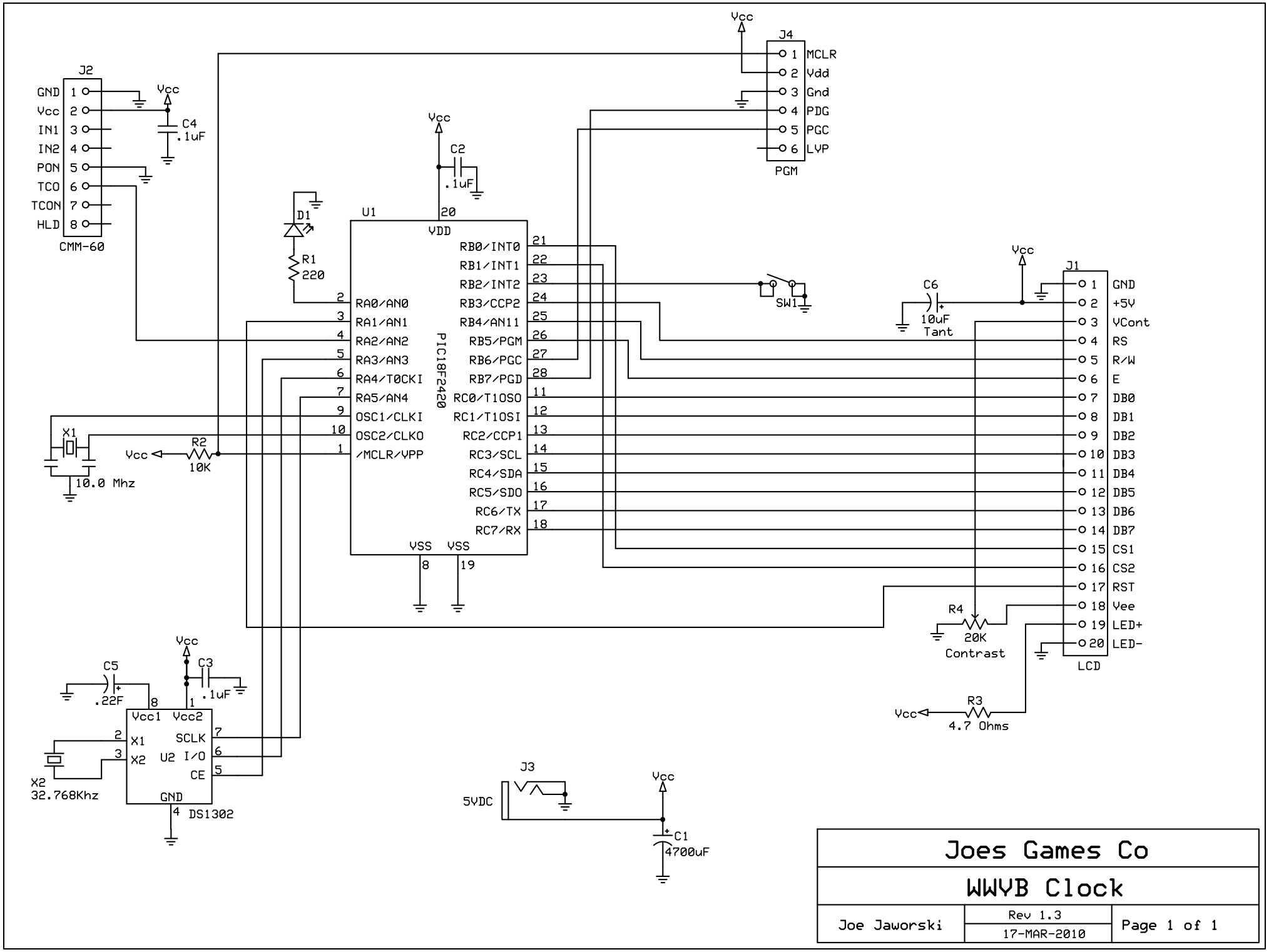

Joes Games Co		
WWYB Clock		
Joe Jaworski	Rev 1.3 17-MAR-2010	Page 1 of 1