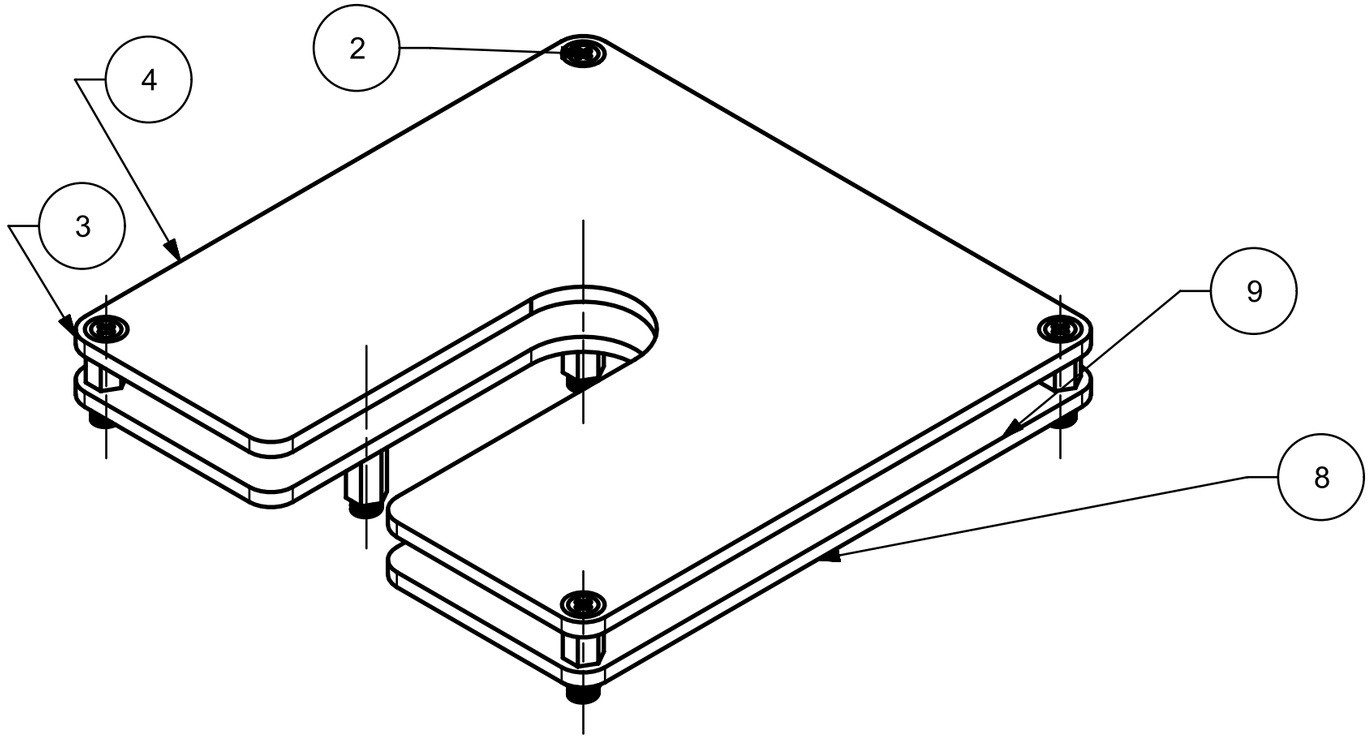

PC NO	PART NAME	QTY
1	MIDDLENUT	4
2	SHORTBOLT	4
3	UPPERPLATE	1
4	ASSEMBLY2_UPPERPARTS	1
5	SHORTNUT	4
6	LONGBOLT	4
7	LONGNUT	4
8	LOWERPLATE_TARGET	1
9	ASSEMBLY1_TARGETLOWERPARTS	1

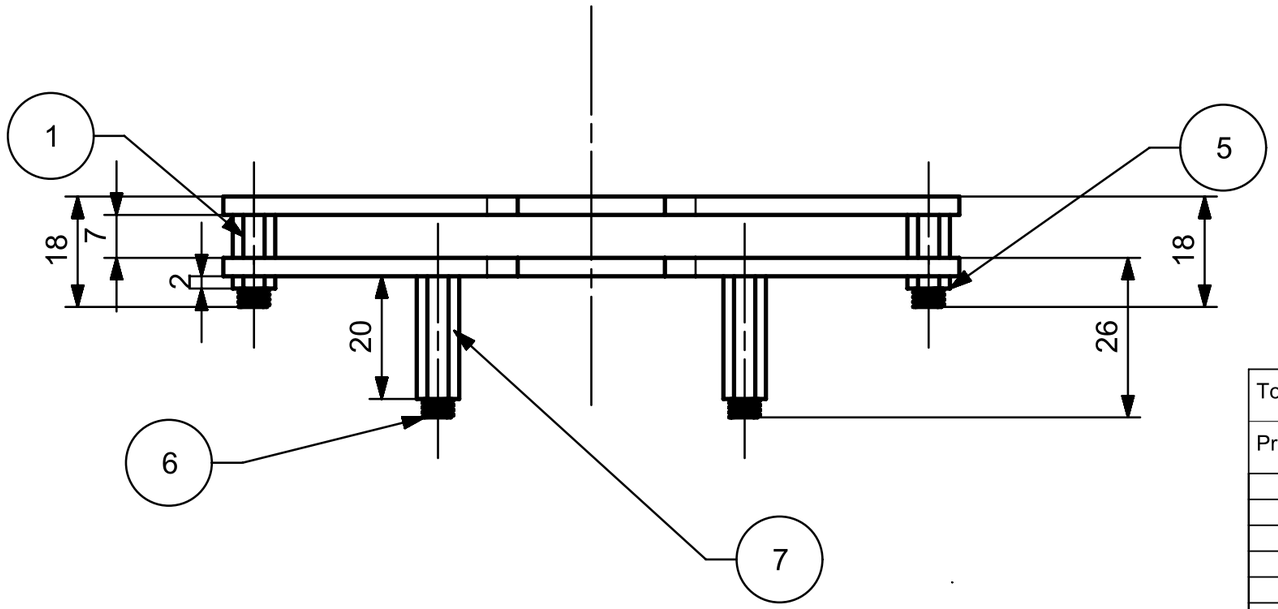

Tolerance norm ISO 8015	General tolerance ISO 2768mk	Workpiece edge ISO 13715	Scale: 1:1
Projection method 1			Weight:
			Material: Steel
			Title: Repository Assembly
			Drawing number: FHV-NX-AP-00001-01
			Sheet 1
			Rev. A

	Date	Name
First issued:	27-10-2015	Grabtastic
Checked by:		
Drawn by:		
Approved by:		

State	Modif.	Date	Name

FHV University of Applied Sciences