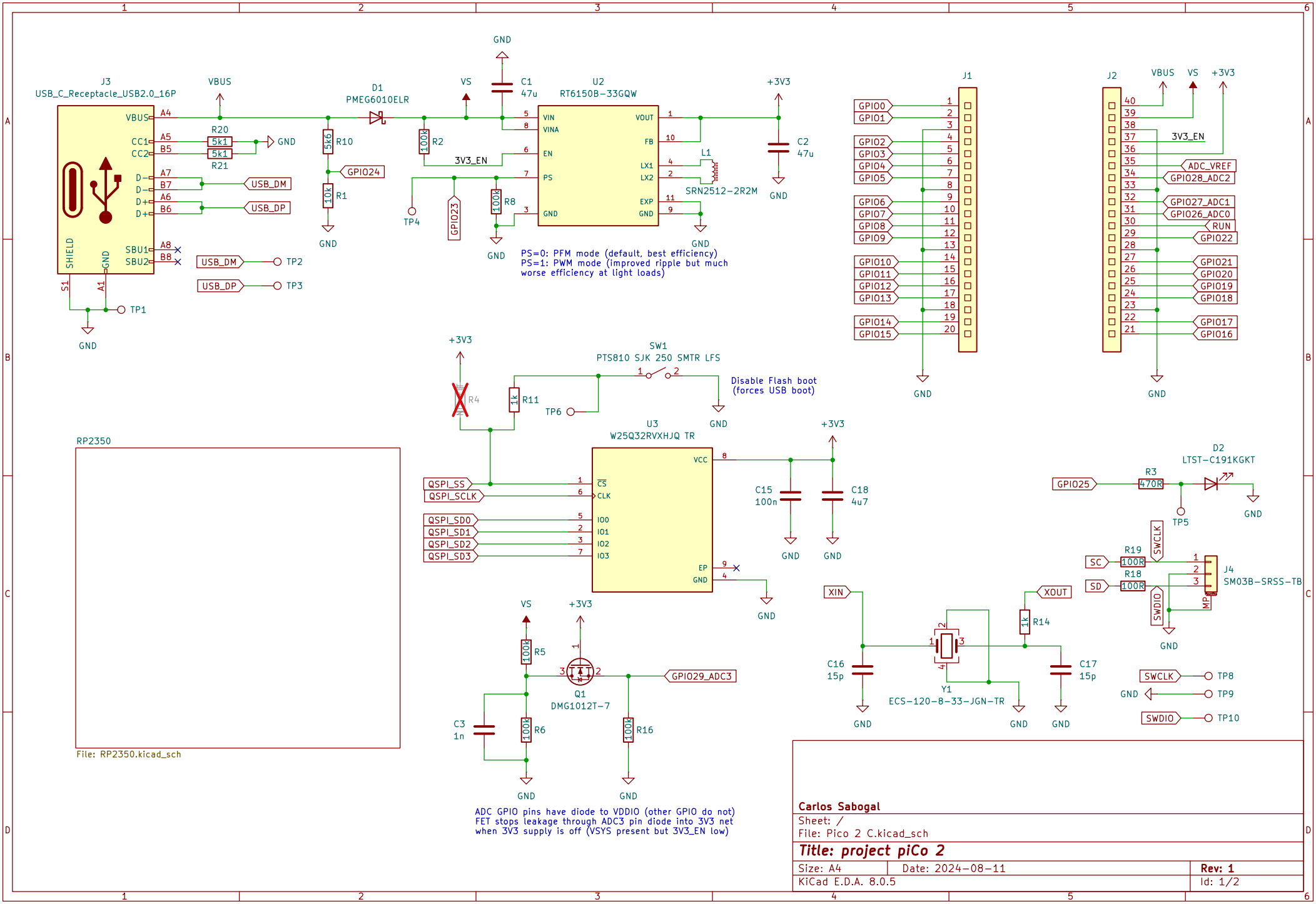
J3
USB_C_Receptacle_USB2.0_16P
VBUS
A4
CC1
A5
CC2
B5
D−
A7
B7
D+
A6
B6
SHIELD
GND
SBU1
A8
SBU2
B8
S1
A1
TP1
R20
5k1
R21
5k1
GND
USB_DM
USB_DP
TP2
TP3
D1
PMEG6010ELR
5k6
R10
10k
R1
GPIO24
100k
R2
3V3_EN
TP4
GPIO23
100k
R8
VS
C1
47u
U2
RT6150B−33GQW
VIN
VINA
EN
PS
GND
VOUT
FB
LX1
LX2
EXP
GND
L1
SRN2512−2R2M
+3V3
C2
47u
PS=0: PFM mode (default, best efficiency)
PS=1: PWM mode (improved ripple but much worse efficiency at light loads)
J1
GPIO00
GPIO01
GPIO02
GPIO03
GPIO04
GPIO05
GPIO06
GPIO07
GPIO08
GPIO09
GPIO010
GPIO011
GPIO012
GPIO013
GPIO014
GPIO015
J2
VBUS
VS
+3V3
3V3_EN
ADC_VREF
GPIO028_ADC2
GPIO027_ADC1
GPIO026_ADC0
RUN
GPIO22
GPIO21
GPIO20
GPIO19
GPIO18
GPIO17
GPIO16
SW1
PTS810 SJK 250 SMTR LFS
Disable Flash boot
(forces USB boot)
R4
1k
R11
TP6
U3
W25Q32RVXHJQ TR
QSPI_SS
QSPI_SCLK
QSPI_SD0
QSPI_SD1
QSPI_SD2
QSPI_SD3
CS
CLK
IO0
IO1
IO2
IO3
VCC
EP
C15
100n
C18
4u7
RP2350
File: RP2350.kicad_sch
GPIO25
R3
470R
D2
LTST−C191KGKT
TP5
SC
SD
R19
100R
R18
100R
SWCLK
SWDIO
J4
SM03B−SRSS−TB
MP
XIN
XOUT
R14
1k
C16
15p
C17
15p
Y1
ECS−120−8−33−JGN−TR
SWCLK
SWDIO
TP8
TP9
TP10
R5
100k
R6
100k
C3
1n
Q1
DMG1012T−7
GPIO29_ADC3
R16
100k
ADC GPIO pins have diode to VDDIO (other GPIO do not)
FET stops leakage through ADC3 pin diode into 3V3 net
when 3V3 supply is off (VSYS present but 3V3_EN low)
Carlos Sabogal
Sheet: /
File: Pico 2 C.kicad_sch
Title: project piCo 2
Size: A4
Date: 2024−08−11
Rev: 1
KiCad E.D.A. 8.0.5
Id: 1/2

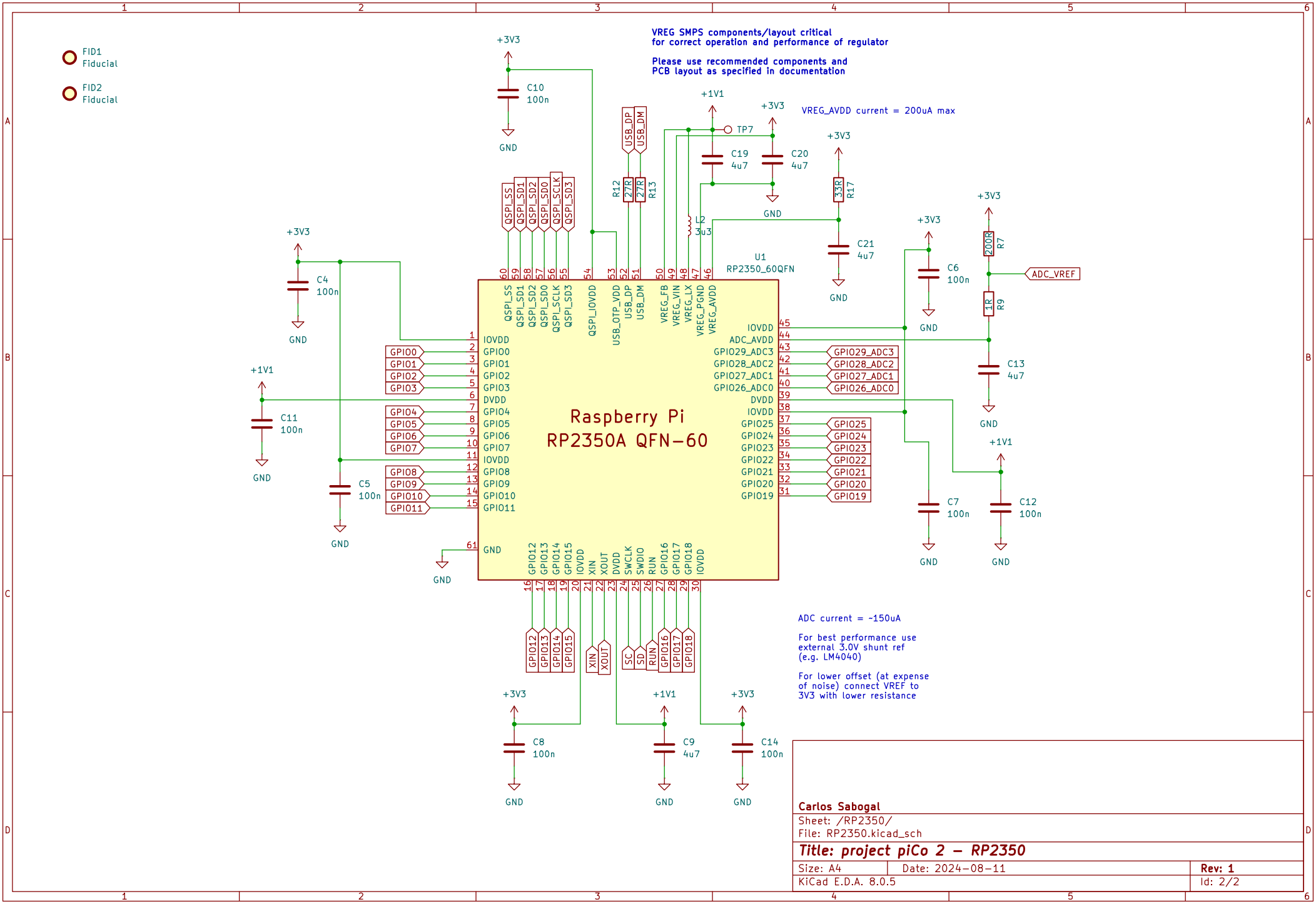
FID1
Fiducial
FID2
Fiducial
VREG SMPS components/layout critical
for correct operation and performance of regulator
Please use recommended components and
PCB layout as specified in documentation
VREG_AVDD current = 200uA max
U1
RP2350_60QFN
Raspberry Pi
RP2350A QFN-60
QSPI_SS
QSPI_SD1
QSPI_SD2
QSPI_SD0
QSPI_SCLK
QSPI_SD3
QSPI_IOVDD
USB_OTP_VDD
USB_DP
USB_DM
VREG_FB
VREG_VIN
VREG_LX
VREG_PGND
VREG_AVDD
IOVDD
GPIO0
GPIO1
GPIO2
GPIO3
DVDD
GPIO4
GPIO5
GPIO6
GPIO7
GPIO8
GPIO9
GPIO10
GPIO11
GND
GPIO12
GPIO13
GPIO14
GPIO15
XIN
XOUT
SWCLK
SWDIO
RUN
GPIO16
GPIO17
GPIO18
ADC_AVDD
GPIO29_ADC3
GPIO28_ADC2
GPIO27_ADC1
GPIO26_ADC0
GPIO25
GPIO24
GPIO23
GPIO22
GPIO21
GPIO20
GPIO19
SC
SD
ADC_VREF
ADC current = ~150uA
For best performance use
external 3.0V shunt ref
(e.g. LM4040)
For lower offset (at expense
of noise) connect VREF to
3V3 with lower resistance
+3V3
+1V1
GND
C10 100n
C4 100n
C11 100n
C5 100n
C8 100n
C9 4u7
C14 100n
C19 4u7
C20 4u7
C21 4u7
C6 100n
C7 100n
C12 100n
C13 4u7
R12 27R
R13 27R
R17 33R
R7 200R
R9 1R
L2 3u3
TP7
Carlos Sabogal
Sheet: /RP2350/
File: RP2350.kicad_sch
Title: project piCo 2 – RP2350
Size: A4
Date: 2024-08-11
Rev: 1
KiCad E.D.A. 8.0.5
Id: 2/2