PT LOTTE CHEMICAL INDONESIA	PUMP HYDRAULIC REPORT	LOTTE E&C

Project Name :

LINE Project

Site Location :

Cilegon, Indonesia

Document Title :

PUMP HYDRAULIC REPORT

Document No. :

LINE-300-BC-4-0401

Client's Contract No. : Later
LEC's Job No. : 15005

0	26-Sep-2022	Issue for Construction	J.H. KIM	J.H. MYUNG	J.Y. KIM
A	10-Mar-2022	Issue for Review	S.S. BYUN	J.H. MYUNG	J.Y. KIM
Rev	Date	Description	Prepared	Reviwed	Approved

LIST OF REVISION DESCRIPTION

Rev. No.	Rev. Date.	Revised Page	Description	Remarks
A	10-Mar-2022		Issue For Review	
0	26-Sep-2022		Issue For Construction	

Pump Hydraulic Report

1) Introduction

This report is prepared to summarize hydraulic calculation result for all of pumps in GHU/BTX/Utility unit.
The purpose of this report is to verify process data in Pump Data Sheet by hydraulics review.

2) Calculation Basis

The following is hydraulics calculation basis to verify Pumps

- LEC in-house software program
- Licensor PDP
- Plot Plan.
- Equivalent Length is assumed with straight length based on plot plan by multiplying factor.
- NPSHa is calculated based on suction vessel bottom TL.
- Equipment pressure drop is based on allowable pressure drop in Licensor data.
- Flowmeter pressure drop is as below
  : Orifice meter - 0.2 kg/cm2 , Coriolis mass flowmeter - 0.5 kg/cm2
- Pump Shut-off Pressure is calculated according to Design Philosophy.
  : Shut-off Pressure = Max Suction Pressure + Rated TDH(Total Differential Head) x 1.25
- Control Valve del. P in Licensor data is applied and (if required) adjusted according to calculated TDH

3) Calculation Result

Summary Table and individual calculation sheets are attached in this report.
Please refer to the attachment for detail information

Attachment #1 Pump Hydraulic Result Summary
Attachment #2 Pump Hydraulic Calculation Sheet

Attachment #1 : Pump Hydraulic Result Summary

PUMP HYDRAULIC RESULT SUMMARY
(GHU UNIT)

ITEM NO.	SERVICE	TYPE	CASE	Rated Flow rate (m3/h)	NPSHa (m)		CV del. P (Kg/Cm2)		Diff. Head (m)		Shut-off P (Kg/Cm2 g)		Design Pressure	C/V del. P / Friction (%)	Remark
					D/S	Calc.	D/S	Calc.	D/S	Calc.	D/S	Calc.			
30-P-101A/B	GHU-I FEED PUMP	CENTRIFUGAL	CASE B EOR	150.2	4.50	7.42	1.07 / 0.86	1.16 / 0.7	407	407	45	46.59	45.0	35.2	Design Pressure에 맞춰 pump 선정
30-P-102A/B	GHU-I RECYCLE PUMP	CENTRIFUGAL	CASE B SOR	574.5	7.40	7.03	2.54	1.14	128	118	40.6	40.63	40.6	99.4	
30-P-103A/B	DEPENTANIZER REFLUX PUMP	CENTRIFUGAL	CASE B EOR	204.2	5.00	7.08	0.5	0.5	83	67	15.6	14.79	15.6	105.6	
30-P-104A/B	DEOCTANIZER REFLUX PUMP	CENTRIFUGAL	CASE A EOR	20.9	3.50	9.29	1.12	0.92	56	51	9.7	10.56	10.5	117.9	
30-P-105A/B	GHU-II FEED PUMP	CENTRIFUGAL	CASE A EOR	84.6	4.70	7.58	1.8 / 0.68	1.4 / 0.68	399	416	43.6	48.08	47.8	31.4	Pump Head 증가됨
30-P-106A/B	DEOCTANIZER BOTTOM PUMP	CENTRIFUGAL	CASE A EOR	11.9 + Warm up(0.2)	4.50	4.61	1.05	0.52	90	97	12.3	13.21	13.2	22.8	Pump Head 증가됨
30-P-201A/B	GHU-II RECYCLE PUMP	CENTRIFUGAL	CASE B EOR	80 + Warm up(0.3)	3.70	3.79	1.64	0.53	117	124	38.7	39.8	40.0	64.1	Pump Head 증가됨
30-P-202A/B	STRIPPER REFLUX PUMP	CENTRIFUGAL	CASE A EOR	22.8	3.60	3.97	1.08	0.84	53	53	14.6	14.67	14.6	165.4	

GENERAL NOTES
1. LINE LENGTH는 REFERENCE PLOT PLAN BASE 기준

PUMP HYDRAULIC RESULT SUMMARY
(BTX UNIT)

ITEM NO.	SERVICE	TYPE	CASE	Rated Flow rate (m3/h)	NPSHa (m)		CV del. P (Kg/Cm2)		Diff. Head (m)		Shut-off P (Kg/Cm2 g)		Design Pressure	C/V del. P / Friction (%)	Remark
					D/S	Calc.	D/S	Calc.	D/S	Calc.	D/S	Calc.			
30-P-301A/B	DEHEPTANIZER REFLUX PUMP	CENTRIFUGAL	RICH CASE	148	5+	10.12	1.7	1.38	100	79	11	11.86	12.0	184.2	
30-P-302A/B	DEHEPTANIZER BOTTOMS PUMP	CENTRIFUGAL	RICH CASE	10.5 + Warm up(0.3)	5+	5.74	0.7	2.63	95	95	10	12.74	12.3	84.9	150#에 맞게 Pump 선정 120% 적용
30-P-303A/B	EDC FEED PUMP	CENTRIFUGAL	RICH CASE	83.1	5+	12.52	0.9	0.61	95	65	10	10.52	10.5	50.8	
30-P-304A/B	EDC REFLUX PUMP	CENTRIFUGAL	LEAN CASE	58.2	5+	15.51	0.7	0.7	105	96	10	12.44	12.5	30.2	
30-P-305A/B	EDC WATER PUMP	CENTRIFUGAL	RICH CASE	4.1	5+	10.29	0.9	0.61	35	20	5	6.62	7.0	267.2	
30-P-306A/B	EDC BOTTOM PUMP	CENTRIFUGAL	RICH CASE	367.6 + Warm up(0.5)	5+	5.9	1.8	1.67	40	25	8	8.05	8.0	341.7	
30-P-307A/B	SRC REFLUX PUMP	CENTRIFUGAL	RICH CASE	88.2	5+	7.27	1	0.91	70	68	8	11.53	11.5	44.7	
30-P-308A/B	SRC WATER PUMP	CENTRIFUGAL	RICH CASE	5.6	5+	5.6	0.8	0.97	35	20.2	5	6.66	7.0	374.3	
30-P-309A/B	SRC BOTTOM PUMP	CENTRIFUGAL	RICH CASE	307.2 + Warm up(1.0)	5+	6	0.7	2.92	150	144	21	24.82	25.0	46.9	
30-P-310A/B	WATER SURGE PUMP	CENTRIFUGAL	RICH CASE	5.6	5+	10.67	0.8	0.72	70	32	9	7.78	8.0	56.2	
30-P-311	FRESH/WET SOLVENT PUMP	CENTRIFUGAL	RICH CASE	50	5+	8.65	-	-	120	111	18	18.39	18.0	0.0	
~~30-P-312A/B~~	~~EJECTOR CONDENSATE PUMP~~	~~VOLUMETRIC~~	~~RICH CASE~~	~~1.5~~	~~5+~~	~~10.4~~	~~-~~	~~-~~	~~65~~	~~65~~	~~8~~	~~10.37~~	~~8.0~~	~~0.0~~	DELETED
30-P-313	SKIMMED OIL TRANSFER PUMP	CENTRIFUGAL	RICH CASE	4	-	10.2	-	-	-	147	-	14.98	14.5	0.0	
30-P-401A/B	CLAY TOWER CHARGE PUMP	CENTRIFUGAL	RICH CASE	56.6	5+	15.91	10.9	11.8	255	270	27	32.86	32.9	133.8	
30-P-402A/B	BENZENE COLUMN REFLUX PUMP	CENTRIFUGAL	RICH CASE	101.9	5+	15.72	0.8	0.8	75	57	9	10.51	10.5	152.4	
30-P-403A/B	BENZENE COLUMN BOTTOMS PUMP	CENTRIFUGAL	RICH CASE	16.7 + Warm up(0.2)	5+	5.73	0.9	0.7	50	64	7	10.35	10.4	27.4	
30-P-404A/B	TOLUENE COLUMN REFLUX PUMP	CENTRIFUGAL	RICH CASE	54.5	5+	10.46	0.9	0.7	80	77.2	9	11.74	11.0	22.5	
30-P-405A/B	TOLUENE COLUMN BOTTOMS PUMP	CENTRIFUGAL	RICH CASE	0.7 + MCF(2.5)	5+	5.78	RO_5.0	RO_4.99	80	73	9	10.84	11.0	0.0	
30-P-406A/B	BENZENE TRANSFER PUMP	CENTRIFUGAL	RICH CASE	150	5+	9.13	0.9	1.21	80	77	9	9.27	9.0	41.0	
30-P-407A/B	TOLUENE TRANSFER PUMP	CENTRIFUGAL	RICH CASE	14.2	5+	11.37	0.8	1.16	80	79	9	9.28	9.0	102.9	
30-P-314A/B	C7 CUT FEED PUMPS	CENTRIFUGAL	RICH CASE	110	11.9	11.23	-	1.38	-	92	-	10.62	10.4	59.1	

GENERAL NOTES
1. LINE LENGTH는 REFERENCE PLOT PLAN BASE 기준

PUMP HYDRAULIC RESULT SUMMARY
(UTILITY UNIT)

ITEM NO.	SERVICE	TYPE	CASE	Rated Flow rate (m3/h)	NPSHa (m)		CV del. P (Kg/Cm2)		Diff. Head (m)		Shut-off P (Kg/Cm2 g)		Design Pressure	C/V del. P / Friction (%)	Remark
					D/S	Calc.	D/S	Calc.	D/S	Calc.	D/S	Calc.			
30-P-601A/B	STEAM CONDENSATE TRANSFER PUMP	CENTRIFUGAL		132.4	-	4.28	-	1.75	60	41.5	11.5	11.6	11.5	113.47	
30-P-701A/B	SOLVENT SUMP PUMP	SUBMERSIBLE	RICH CASE	20	Flooded Suction	10.67	N/A	N/A	35	35	6	8.72	8.7	0	
30-P-702A/B	HC SLOP SUMP PUMP	SUBMERSIBLE		24	Flooded Suction	5.02	N/A	N/A	89	89	11.9	11.89	11.9	0	
30-P-704A/B	POCS / OWS SUMP PUMP	SELF-PRIMING		40	-	2.73	N/A	N/A	-	50	-	5.96	10	0	

GENERAL NOTES
1. LINE LENGTH는 REFERENCE PLOT PLAN BASE 기준

Attachment #2 : Pump Hydraulic Calculation Sheet

30-P-101A/B

LOTTE E&C 롯데건설주식회사

JOB NO.		PREPD BY:	J.H.Kim	DATE:	Sep. 26 '22
SERVICE	GHU-I FEED PUMP (PATH 1)	CHKD BY:	J.H.Myung	APPD BY:	J.Y.Kim

PAGE: 1/2 △0

*** Result**

1) NPSHA
Datasheet : 7.0 m
Calculation : 7.42 m
-> No problem

2) Diff. Pressure
Datasheet : 30.26 kg/cm2
Calculation : 30.26 kg/cm2
-> No problem

3) Line Size
Referece
- Suc. : Velocity : 1.2 ~ 2.4 m/s, ΔP/100m : 0.23 kg/cm2
- Disch. : Velocity : 2.4 ~ 3.0 m/s, ΔP/100m : 0.92 kg/cm2

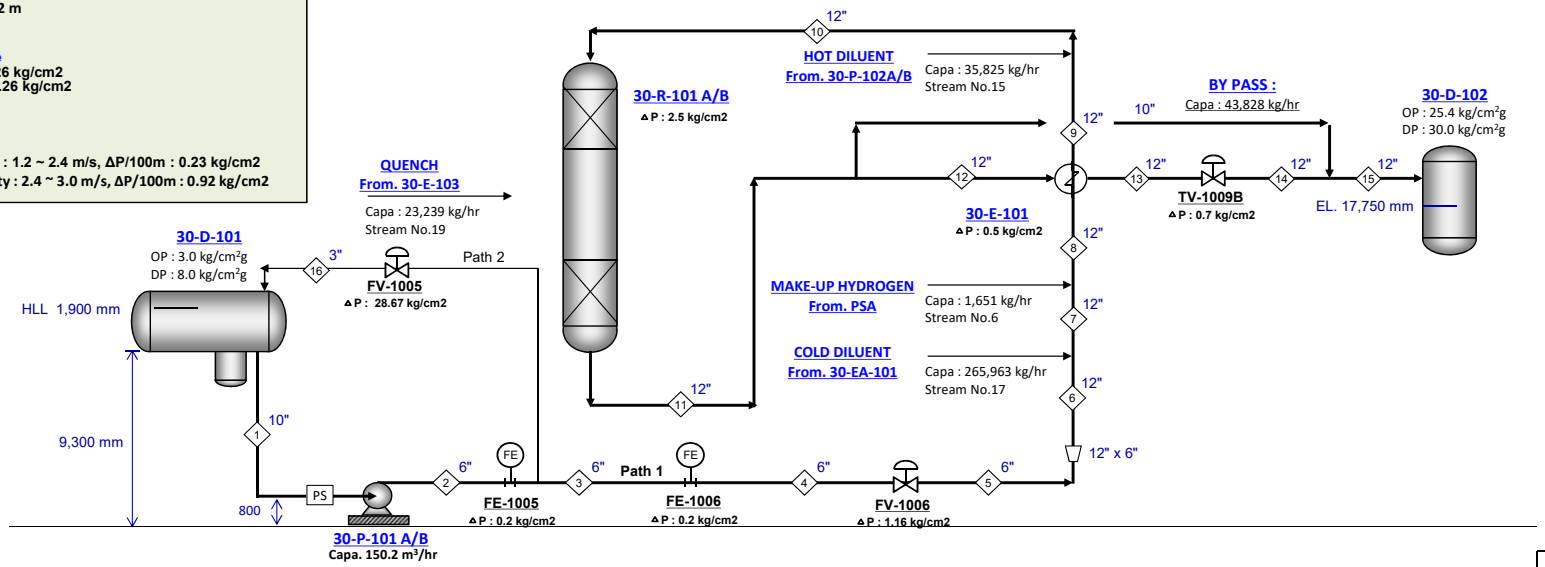

NOTE : 1. Assumed Data as below.
- Permanent Strainer △P = 0.07 kg/cm2
- Flow Element △P = 0.2 kg/cm2

CV Input Data		
Item No.		
Des. Cap.		
Density		
D.P		
Char.		

PUMP CALCULATION

ITEM NUMBER	30-P-101A/B	
SUCTION		
Flow Rate	150.2	m3/hr
Operating Pres.	3	kg/cm2.G
Design Pres.	8	kg/cm2.G
Min. Static Head	9.3	meter
Max. Static Head	11.2	meter
Pump Shaft Level	0.8	meter
Vapor Pres.	4.033	kg/cm2.A
Allowance	0	meter
Pipe Friction Loss	0.010	kg/cm2
Strainer	0.07	kg/cm2
Others		kg/cm2
Net Suction Pres.	3.55	kg/cm2.G
Max. Suction Pres.	8.77	kg/cm2.G
NPSH Available	7.42	meter
DISCHARGE		
Operating Pres.	25.40	kg/cm2.G
Max. Static Head	17.8	meter
Pipe friction Loss	1.389	kg/cm2.G
Pipe Gravity Loss	1.260	kg/cm3.G
Equip. Pres. Drop	3.9	kg/cm2.G
Control Valves	1.9	kg/cm2.G
Others		kg/cm2.G
Disch. Press. Req'd	33.81	kg/cm2.G
Diff. Pres.	30.26	kg/cm2
Diff. Head (Net)	407	meter
Hydr. Horsepower	123.7	KW
Est. Efficieny		%
Est. BHP		KW
Est. Shut-off Pres.	46.59	kg/cm2.G
C.V dp / Friction	35.16	%

CONTROL VALVES

ITEM NO.	CAL. CV	RTD CV	% OPEN

		SUCTION			DISCHARGE																					
STREAM ID	UNIT	1			2	FE-1005	3	FE-1006	4	FV-1006	5	6	7	8	30-E-101	9	10	30-R-101A/B	11	12	30-E-101	13	TV-1009B	14	15	
Design Case																										
Phase		LIQUID			LIQUID		LIQUID		LIQUID		LIQUID	LIQUID	LIQUID	2PH		2PH	2PH		2PH	2PH		2PH		2PH	2PH	
Vapor Fraction														0.010		0.045	0.043		0.094	0.095		0.015		0.015	0.019	
Normal Flow Rate	kg/hr	85,851			85,851		85,851		85,851		85,851	85,851	290,438	291,706		291,706	319,264		337,141	303,427		303,427		303,426	337,141	
Over Design	%	30			30		30		30		30	30	30	30		30	30		30	30		30		30	30	
Rated Flow Rate	kg/hr	111,606			111,606		111,606		111,606		111,606	111,606	377,570	379,218		379,218	415,043		438,283	394,455		394,455		394,454	438,283	
Temperature	°C	42.0			42.0		42.0		42.0		42.0	42.0	55.0	53.0		120.0	120.0		175.0	175.0		120.0		120.0	126.0	
Pressure @Inlet	kg/cm2G	3.00			33.81	33.79	33.59	33.58	33.38	33.36	32.20	30.93	30.93	30.92	30.76	30.26	30.23	29.83	27.33	26.90	26.88	26.38	26.36	25.66	25.65	
Pressure @Destination	kg/cm2G	3.55			33.79	33.59	33.58	33.38	33.36	32.20	30.93	30.93	30.92	30.76	30.26	30.23	29.83	27.33	26.90	26.88	26.38	26.36	25.66	25.65	25.40	
Line Size	inch	10			6		6		6		6	12	12	12		12	12		12	12		12		12	12	
Equivalent Length	M	66.4			7.7		7.7		7.7		7.7	8.5	8.5	76.9		8.5	120		120	9		9		9	117	
Elevation Change	M	-8.5			0.0		0.0		0.0		17.0	0.0	0.0	0.0		0.0	0		0	0		0		0	0.0	
Fluid, Density	kg/m3	743.3			743.3		743.3		743.3		743.3	743.3	725.1	385.4		310.8	315.8		317.0	317.0		455.3		455.3	433.0	
Fluid, Viscosity	cP	0.28			0.28		0.28		0.28		0.28	0.28	0.26													
Velocity	m/sec	0.82			2.24		2.24		2.24		2.24	0.58	2.00													
Pres. Drop by Friction	kg/cm2	0.010			0.015	0.000	0.015	0.000	0.015	0.000	0.015	0.001	0.006	0.168	0.000	0.025	0.405	0.000	0.424	0.025	0.000	0.014	0.000	0.014	0.250	
Pres. Drop by Gravity	kg/cm2	-0.632			0.000	0.000	0.000	0.000	0.000	0.000	1.260	0.000	0.000	0.000	0.000	0.000	0.000	0.000	0.000	0.000	0.000	0.000	0.000	0.000	0.000	
Pressure Drop / 100 M	kg/cm2	0.015			0.194		0.194		0.194		0.194	0.006	0.067	0.219		0.291	0.338		0.355	0.289		0.160		0.160	0.214	
Equipment Pres. Drop	kg/cm2	0.07				0.2		0.20							0.5			2.5			0.5					
CV PRESSURE DROP	kg/cm2									1.16													0.7			

LOTTE E&C 롯데건설주식회사	JOB NO.		PREPD BY:	J.H.Kim	DATE:	Sep. 26 '22	PAGE:	2/2	0
	SERVICE	GHU-I FEED PUMP (PATH2)	CHKD BY:	J.H.Myung	APPD BY:	J.Y.Kim			

*** Result**

1) NPSHA
Datasheet : 7.0 m
Calculation : 7.54 m
-> No problem

2) Diff. Pressure
Datasheet : 30.26 kg/cm2
Calculation : 30.26 kg/cm2
-> No problem

3) Line Size
Referece
- Suc. : Velocity : 1.2 ~ 2.4 m/s, ΔP/100m : 0.23 kg/cm2
- Disch. : Velocity : 2.4 ~ 3.0 m/s, ΔP/100m : 0.92 kg/cm2

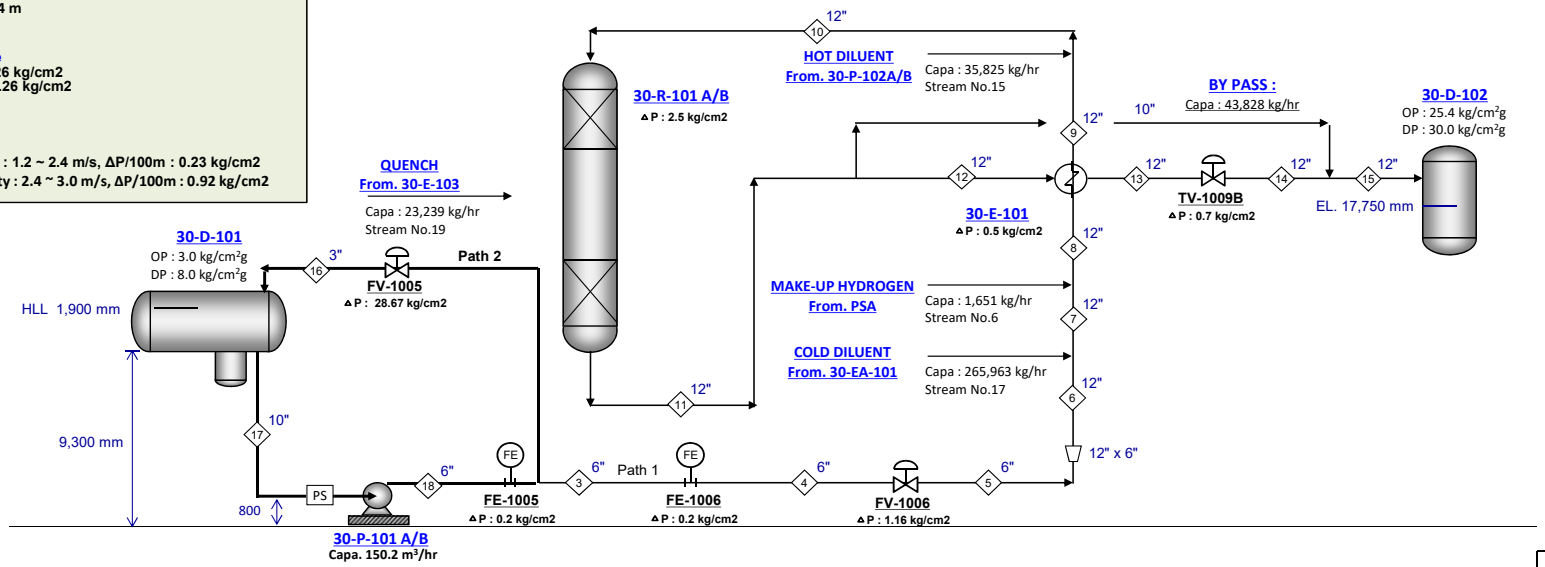

NOTE : 1. Assumed Data as below.
- Permanent Strainer △P = 0.07 kg/cm2
- Flow Element △P = 0.2 kg/cm2

CV Input Data		
Item No.		
Des. Cap.		
Density		
D.P		
Char.		

PUMP CALCULATION

ITEM NUMBER	30-P-101A/B	
SUCTION		
Flow Rate	150.2	m3/hr
Operating Pres.	3	kg/cm².G
Design Pres.	8	kg/cm².G
Min. Static Head	9.3	meter
Max. Static Head	11.2	meter
Pump Shaft Level	0.8	meter
Vapor Pres.	4.033	kg/cm².A
Allowance	0	meter
Pipe Friction Loss	0.002	kg/cm²
Strainer	0.07	kg/cm²
Others		kg/cm²
Net Suction Pres.	3.56	kg/cm².G
Max. Suction Pres.	8.77	kg/cm².G
NPSH Available	7.54	meter
DISCHARGE		
Operating Pres.	3.00	kg/cm².G
Max. Static Head	12.1	meter
Pipe friction Loss	0.681	kg/cm².G
Pipe Gravity Loss	0.836	kg/cm³.G
Equip. Pres. Drop	0.2	kg/cm².G
Control Valves	28.7	kg/cm².G
Others	0.43	kg/cm².G
Disch. Press. Req'd	33.82	kg/cm².G
Diff. Pres.	30.26	kg/cm²
Diff. Head (Net)	407	meter
Hydr. Horsepower	47.0	KW
Est. Efficieny		%
Est. BHP		KW
Est. Shut-off Pres.	46.59	kg/cm².G
C.V dp / Friction	2186.99	%

CONTROL VALVES

ITEM NO.	CAL. CV	RTD CV	% OPEN

		SUCTION			DISCHARGE																					
STREAM ID	UNIT	17			18	FE-1005	FV-1005	16																		
Design Case																										
Phase		LIQUID			LIQUID			LIQUID																		
Vapor Fraction																										
Normal Flow Rate	kg/hr	42,368			42,368			42,368																		
Over Design	%	0			0			0																		
Rated Flow Rate	kg/hr	42,368			42,368			42,368																		
Temperature	°C	42.0			42.0			42.0																		
Pressure @Inlet	kg/cm²G	3.00			33.82	33.81	33.61	4.94																		
Pressure @Destination	kg/cm²G	3.56			33.81	33.61	4.94	3.43																		
Line Size	inch	10			6			3																		
Equivalent Length	M	66.4			7.7			70.4																		
Elevation Change	M	-8.5			0.0			11.3																		
Fluid, Density	kg/m³	743.3			743.3			743.3																		
Fluid, Viscosity	cP	0.28			0.28			0.28																		
Velocity	m/sec	0.31			0.85			3.32																		
Pres. Drop by Friction	kg/cm²	0.002			0.002	0.000	0.000	0.679																		
Pres. Drop by Gravity	kg/cm²	-0.632			0.000	0.000	0.000	0.836																		
Pressure Drop / 100 M	kg/cm²	0.002			0.030			0.964																		
Equipment Pres. Drop	kg/cm²	0.07				0.2																				
CV PRESSURE DROP	kg/cm²						28.67																			

LINE IDENTIFICATION		1	2	3	4	5	6	7	8	9	10	11	12	13	14	15	16	17	18
SIMU. STREAM ID																			
SERVICE																	PUMP MIN. FLOW		
TYPE OF FLOW	(L/V/2PH)	LIQUID	LIQUID	LIQUID	LIQUID	LIQUID	LIQUID	LIQUID	2PH	2PH	2PH	2PH	2PH	2PH	2PH	2PH	LIQUID	LIQUID	LIQUID
OPERATING CONDITION																			
Temperature	C	42	42	42	42	42	42	55	53	120	120	175	175	120	120	126	42	42	42
Pressure @up	Kg/cm2.G								32.07	31.40	31.37	28.47	28.05	27.52	26.63	26.60			
Pressure @down	Kg/cm2.G	0.62	-0.01	-0.01	-0.01	-1.27	0.00	-0.01	31.90	31.38	30.97	28.05	28.03	27.51	26.62	26.35	-1.51	0.63	0.00
PIPING INFORMATION																			
Nominal Size	inch	10.0	6.0	6.0	6.0	6.0	12.0	12.0	12.0	12.0	12.0	12.0	12.0	12.0	12.0	12.0	3.0	10.0	6.0
Schedule or Class	-	40	40	40	40	40	40	40	40	40	40	40	40	40	40	40	40	40	40
Line length,straight	m	50.0	5.0	5.0	5.0	5.0	5.0	5.0	45.0	5.0	70.0	70.0	5.0	5.0	5.0	68.2	50	50	5.0
Eqivalent Length Over Design Factor	-	0.25	0.50	0.50	0.50	0.50	0.50	0.50	0.50	0.50	0.50	0.50	0.50	0.50	0.50	0.50	0.5	0.25	0.50
Net Elevation Change	m	(8.5)	0.0	0.0	0.0	17.0	0.0	0.0	0.0	0.0	0.0	0.0	0.0	0.0	0.0	0.0	11	(8.5)	0.0
Equivalent Length	m	66.4	7.7	7.7	7.7	7.7	8.5	8.5	76.9	8.5	119.6	119.6	8.5	8.5	8.5	116.6	70.4	66.4	7.7
Pipe inside Dia.	m	0.255	0.154	0.154	0.154	0.154	0.303	0.303	0.303	0.303	0.303	0.303	0.303	0.303	0.303	0.303	0.078	0.255	0.154
Wall Roughness	mm	0.046	0.046	0.046	0.046	0.046	0.046	0.046	0.046	0.046	0.046	0.046	0.046	0.046	0.046	0.046	0.046	0.046	0.046
LIQUID PHASE CALCULATION																			
Flow Rate	Kg/h	85,851	85,851	85,851	85,851	85,851	85,851	290,438	288,656	278,647	305,585	305,314	274,593	298,820	298,819	330,586	42,368	42,368	42,368
Flow Rate Design Margin	%	30	30	30	30	30	30	30	30	30	30	30	30	30	30	30	0	0	0
Density @PT	Kg/m3	743.3	743.3	743.3	743.3	743.3	743.3	725.1	726.2	652.3	651.7	577.3	577.5	647.3	647.3	639.9	743.3	743.3	743.3
Viscosity @PT	cP	0.280	0.280	0.280	0.280	0.280	0.280	0.260	0.260	0.160	0.160	0.100	0.100	0.150	0.150	0.150	0.280	0.280	0.280
Surface Tension	dyn/cm								18.4	11.1	11.1	6.0	6.0	11.0	11.0	10.4			
Flow Rate, rated	kg/h	111,606	111,606	111,606	111,606	111,606	111,606	377,570	375,253	362,241	397,261	396,908	356,971	388,466	388,465	429,762	42,368	42,368	42,368
Vol. Flow	m3/hr	150.2	150.2	150.2	150.2	150.2	150.2	520.7	516.7	555.3	609.6	687.5	618.1	600.1	600.1	671.6	57.0	57.0	57.0
Velocity	m/s	0.82	2.24	2.24	2.24	2.24	0.58	2.00	1.99	2.14	2.34	2.64	2.38	2.31	2.31	2.58	3.32	0.31	0.85
Reynolds No	-	5.54E+05	9.15E+05	9.15E+05	9.15E+05	9.15E+05	4.65E+05	1.69E+06	1.68E+06	2.64E+06	2.90E+06	4.63E+06	4.16E+06	3.02E+06	3.02E+06	3.34E+06	6.87E+05	2.10E+05	3.47E+05
Friction Factor	-	0.0151	0.0157	0.0157	0.0157	0.0157	0.0151	0.0137	0.0137	0.0135	0.0134	0.0133	0.0133	0.0134	0.0134	0.0134	0.0180	0.0169	0.0167
Press. @Out	Kg/cm2.G	0.622	-0.015	-0.015	-0.015	-1.275	-0.001	-0.006	32.019	31.394	31.273	28.362	28.044	27.513	26.623	26.488	-1.515	0.630	-0.002
Pressure Drop by Friction	Kg/cm2	0.0100	0.015	0.015	0.015	0.015	0.001	0.006	0.051	0.006	0.097	0.108	0.006	0.007	0.007	0.112	0.679	0.002	0.002
Pressure Drop by Gravity	Kg/cm2	-0.632	0.000	0.000	0.000	1.260	0.000	0.000									0.836	-0.632	0.000
Dp / 100 m (by friction)	Kg/cm2	0.0151	0.1936	0.1936	0.1936	0.1936	0.0063	0.0671									0.9637	0.0024	0.0297
VAPOR PHASE CALCULATION																			
Flow Rate,max op	Kg/h								3,050	13,059	13,679	31,827	28,834	4,607	4,607	6,555			
Flow Rate Design Margin	%								30	30	30	30	30	30	30	30			
Density @PT	Kg/m3								5.62	16.75	16.77	43.02	42.96	16.68	16.68	18.47			
or MW	(-)								4.9	17.4	18.0	49.6	49.7	19.82	19.82	23.1			
Compr. Z	(-)								1.01	0.99	0.99	0.86	0.86	0.99	0.99	0.98			
Viscosity @PT	cP								0.011	0.015	0.015	0.014	0.014	0.015	0.015	0.015			
Flow Rate,rated	Kg/h								3,965	16,977	17,783	41,375	37,484	5,989	5,989	8,522			
Vol. Flow @in	m3/sec								0.20	0.28	0.29	0.27	0.24	0.10	0.10	0.13			
Gas Density @in	Kg/m3								5.62	16.75	16.77	43.02	42.96	16.68	16.68	18.47			
Velocity @in	m/s								2.72	3.90	4.08	3.70	3.36	1.38	1.38	1.77			
Reynolds No	-								4.20E+05	1.32E+06	1.38E+06	3.45E+06	3.12E+06	4.66E+05	4.66E+05	6.63E+05			
Friction Factor	-								0.0152	0.0139	0.0139	0.0134	0.0134	0.0151	0.0151	0.0146			
Gas Dns @Out	Kg/m3								5.616	16.750	16.766	42.997	42.959	16.680	16.680	18.469			
Velocity @Out	m/s								2.716	3.899	4.080	3.702	3.357	1.381	1.381	1.775			
Mach no. @Out	-								0.003	0.008	0.008	0.012	0.011	0.003	0.003	0.004			
Press. @Out	Kg/cm2.G								32.069	31.399	31.362	28.454	28.049	27.520	26.630	26.598			
Pressure Drop by Friction	Kg/cm2								0.001	0.001	0.008	0.016	0.001	0.000	0.000	0.002			
Pressure Drop by Gravity	Kg/cm2																		
Dp / 100 m (by friction)	Kg/cm2																		

LINE IDENTIFICATION		1	2	3	4	5	6	7	8	9	10	11	12	13	14	15	16	17	18
TWO-PHASE CALCULATION METHOD SELECTION									DuklerII	DuklerII	DuklerII	DuklerII	DuklerII	DuklerII	DuklerII	DuklerII			
TWO-PHASE CALCULATION (HTFS)																			
Vapor Flow rate @ outlet	Kg/hr								3,965	16,977	17,783	41,375	37,484	5,989	5,989	8,522			
Upward Angle	deg																		
C factor									11.073	7.367	7.105	4.253	4.393	7.284	7.284	6.657			
Liquid + Vapor density	Kg/m3								406.258	323.641	328.502	325.104	325.064	461.830	461.829	440.855			
Mach No.									0.035	0.042	0.045	0.046	0.042	0.027	0.028	0.033			
Slip Ratio									1.711	1.704	1.678	1.565	1.577	1.436	1.436	1.458			
Void Fraction									0.444	0.517	0.509	0.472	0.472	0.294	0.294	0.320			
Pressure Drop by Acceleration									0.000	0.000	0.000	0.000	0.000	0.000	0.000	0.000			
Pressure Drop by Friction	Kg/cm2								0.123	0.019	0.300	0.299	0.018	0.012	0.012	0.204			
Pres. Drop by Gravity	Kg/cm2								0.000	0.000	0.000	0.000	0.000	0.000	0.000	0.000			
TWO-PHASE CALCULATION (Homogeneous)																			
Bulk density	Kg/m3								238.56	185.93	191.18	204.42	203.55	316.34	316.34	297.57			
Bulk viscosity, centipoise	cP								0.116	0.066	0.068	0.050	0.050	0.099	0.099	0.095			
Velocity, m/sec	m/s								4.704	6.035	6.424	6.344	5.734	3.690	3.690	4.358			
Reynolds number	-								2.93E+06	5.13E+06	5.48E+06	7.89E+06	7.13E+06	3.56E+06	3.56E+06	4.14E+06			
Friction factor	-								0.013	0.013	0.013	0.013	0.013	0.013	0.013	0.013			
Pressure Drop by Friction	Kg/cm2								0.092	0.013	0.210	0.218	0.013	0.008	0.008	0.147			
Pressure Drop by Gravity	Kg/cm2								0.000	0.000	0.000	0.000	0.000	0.000	0.000	0.000			
TWO-PHASE CALCULATION (Dukler)																			
In-place density	Kg/m3								385.37	310.81	315.81	317.01	317.01	455.34	455.34	433.02			
Reynolds number	-								3.07E+06	5.24E+06	5.66E+06	8.71E+06	7.84E+06	4.19E+06	4.19E+06	4.82E+06			
Friction factor	-								0.013	0.013	0.013	0.013	0.013	0.013	0.013	0.013			
Pressure Drop by Friction	Kg/cm2								0.168	0.025	0.405	0.424	0.025	0.014	0.014	0.250			
Pressure Drop by Gravity	Kg/cm2								0.000	0.000	0.000	0.000	0.000	0.000	0.000	0.000			
Press. @Out	Kg/cm2.G								31.902	31.375	30.965	28.046	28.025	27.506	26.616	26.350			
Press. Drop	Kg/cm2								0.168	0.025	0.405	0.424	0.025	0.014	0.014	0.250			
FLOW REGIME FOR VERTICAL																			
Simpson	X-Axis(Xd)								0.009	0.019	0.021	0.043	0.039	0.021	0.021	0.025			
	Y-Axis(Fr)								0.139	0.367	0.384	0.609	0.552	0.130	0.130	0.177			
	Flow Regime								Intermit	Intermit	Intermit	Intermit	Intermit	Intermit	Intermit	Intermit			
Griffith and Wallies	X-Axis								7.44	12.25	13.88	13.54	11.06	4.58	4.58	6.39			
	Y-Axis								0.58	0.65	0.63	0.58	0.59	0.37	0.37	0.41			
	Flow Regime								Slug	Slug	Slug	Slug	Slug	Slug	Slug	Slug			
Taitel and Dukler	Flow Regime								Annular	Annular	Annular	Annular	Annular	Out of Range	Out of Range	Out of Range			
(1) Bubble-Slug	X-Axis								21.67	34.53	36.12	37.54	34.06	12.24	12.24	15.91			
Annular trans	Y-Axis								0.73	0.55	0.57	0.71	0.71	1.67	1.67	1.46			
(2) Slug-Chum	X-Axis								2.73	3.50	3.73	3.68	3.33	2.14	2.14	2.53			
Transition	Y-Axis								0.58	0.65	0.63	0.58	0.59	0.37	0.37	0.41			
	2ph Re no.								3.98E+06	7.46E+06	7.93E+06	1.11E+07	1.00E+07	4.83E+06	4.83E+06	5.64E+06			
(3) Annular-Churn	X-Axis								7.89	3.37	3.53	2.61	2.59	9.82	9.82	8.21			
Slug Trans.	Y-Axis								1.91	5.53	5.79	10.25	9.29	1.96	1.96	2.70			
FLOW REGIME FOR HORIZONTAL																			
Taitel and Dukler	X-Axis(Xp)								7.89	3.37	3.53	2.61	2.59	9.82	9.82	8.21			
	Y-Axis(Fr)								0.14	0.37	0.38	0.61	0.55	0.13	0.13	0.18			
	Y-Axis(Xt)								0.84	0.30	1.23	1.42	0.34	0.32	0.32	1.34			
	Y-Axis(Xk)								180.41	596.49	654.24	1309.96	1125.99	226.41	226.41	324.37			
	Flow Regime								Slug	Slug	Bubble	Bubble	Slug	Slug	Slug	Bubble			
Baker	X-Axis								544.93	304.57	319.11	354.23	351.39	913.61	913.61	792.15			
	Y-Axis								6090	15931	16686	25753	23344	5654	5654	7689			
	Flow Regime								Bubble or Froth	Bubble or Froth	Bubble or Froth	Bubble or Froth	Bubble or Froth	Bubble or Froth	Bubble or Froth	Bubble or Froth			

LOTTE E&C 롯데건설주식회사	JOB NO.		PREPD BY:	J.H.Kim	DATE:	Sep. 26 '22	PAGE:	1/1	0
	SERVICE	GHU-I FEED PUMP (PATH 1)	CHKD BY:	J.H.Myung	APPD BY:	J.Y.Kim			

*** Result**

1) NPSHA
Datasheet : 7.0 m
Calculation : 7.42 m
-> No problem

2) Diff. Pressure
Datasheet : 30.26 kg/cm2
Calculation : 30.26 kg/cm2
-> No problem

3) Line Size
Referece
- Suc. : Velocity : 1.2 ~ 2.4 m/s, ΔP/100m : 0.23 kg/cm2
- Disch. : Velocity : 2.4 ~ 3.0 m/s, ΔP/100m : 0.92 kg/cm2

CASE B SOR

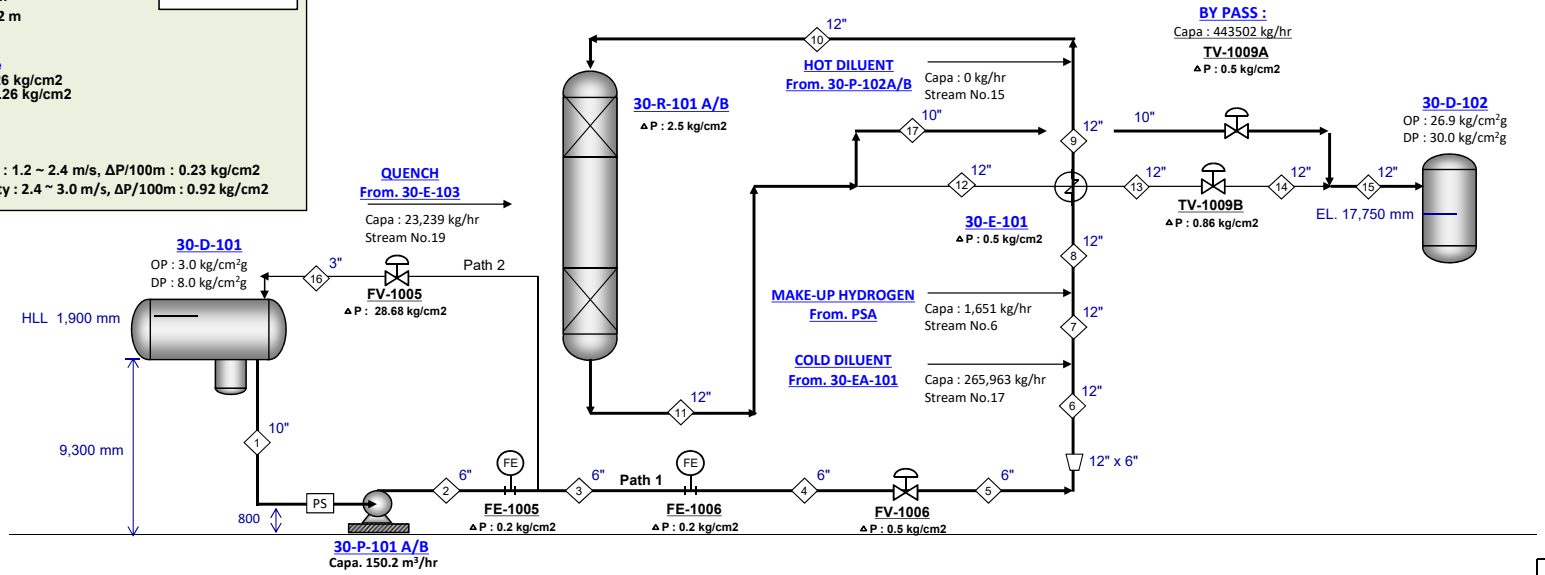

NOTE : 1. Assumed Data as below.
- Permanent Strainer △P = 0.07 kg/cm2
- Flow Element △P = 0.2 kg/cm2

CV Input Data		
Item No.		
Des. Cap.		
Density		
D.P		
Char.		

PUMP CALCULATION

ITEM NUMBER	30-P-101A/B	
SUCTION		
Flow Rate	150.2	m3/hr
Operating Pres.	3	kg/cm².G
Design Pres.	8	kg/cm².G
Min. Static Head	9.3	meter
Max. Static Head	11.2	meter
Pump Shaft Level	0.8	meter
Vapor Pres.	4.033	kg/cm².A
Allowance	0	meter
Pipe Friction Loss	0.010	kg/cm²
Strainer	0.07	kg/cm²
Others		kg/cm²
Net Suction Pres.	3.55	kg/cm².G
Max. Suction Pres.	8.77	kg/cm².G
NPSH Available	7.42	meter
DISCHARGE		
Operating Pres.	26.90	kg/cm².G
Max. Static Head	17.8	meter
Pipe friction Loss	1.244	kg/cm².G
Pipe Gravity Loss	1.265	kg/cm³.G
Equip. Pres. Drop	3.4	kg/cm².G
Control Valves	1.0	kg/cm².G
Others		kg/cm².G
Disch. Press. Req'd	33.81	kg/cm².G
Diff. Pres.	30.26	kg/cm²
Diff. Head (Net)	407	meter
Hydr. Horsepower	123.7	KW
Est. Efficieny		%
Est. BHP		KW
Est. Shut-off Pres.	46.59	kg/cm².G
C.V dp / Friction	21.53	%

CONTROL VALVES

ITEM NO.	CAL. CV	RTD CV	% OPEN

		SUCTION			DISCHARGE																				
STREAM ID	UNIT	1			2	FE-1005	3	FE-1006	4	FV-1006	5	6	7	8	30-E-101	9	10	30-R-101A/B	11	17	TV-1009A	15				
Design Case																										
Phase		LIQUID			LIQUID		LIQUID		LIQUID		LIQUID	LIQUID	LIQUID	2PH		2PH	2PH		2PH	2PH		2PH				
Vapor Fraction														0.010		0.011	0.011		0.012	0.012		0.012				
Normal Flow Rate	kg/hr	85,851			86,198		86,198		86,198		86,198	86,198	321,606	322,876		322,877	322,876		375,082	341,155		375,081				
Over Design	%	30			30		30		30		30	30	30	30		30	30		30	30		30				
Rated Flow Rate	kg/hr	111,606			112,057		112,057		112,057		112,057	112,057	418,088	419,739		419,740	419,739		487,607	443,502		487,605				
Temperature	°C	42.0			42.0		42.0		42.0		42.0	42.0	55.0	53.0		60.0	60.0		120.0	120.0		115.0				
Pressure @Inlet	kg/cm²G	3.00			33.81	33.79	33.59	33.58	33.38	33.36	32.86	31.58	31.58	31.58	31.38	30.88	30.86	30.54	28.04	27.78	27.66	27.16				
Pressure @Destination	kg/cm²G	3.55			33.79	33.59	33.58	33.38	33.36	32.86	31.58	31.58	31.58	31.38	30.88	30.86	30.54	28.04	27.78	27.66	27.16	26.90				
Line Size	inch	10			6		6		6		6	12	12	12		12	12		12	10		12				
Equivalent Length	M	66.4			7.7		7.7		7.7		7.7	8.5	8.5	76.9		8.5	120		120	33		117				
Elevation Change	M	-8.5			0.0		0.0		0.0		17.0	0.0	0.0	0.0		0.0	0		0	0		0				
Fluid, Density	kg/m³	743.3			746.3		746.3		746.3		746.3	746.3	722.7	397.6		388.6	382.6		482.9	482.7		477.4				
Fluid, Viscosity	cP	0.28			0.29		0.29		0.29		0.29	0.29	0.26													
Velocity	m/sec	0.82			2.24		2.24		2.24		2.24	0.58	2.23													
Pres. Drop by Friction	kg/cm²	0.010			0.015	0.000	0.015	0.000	0.015	0.000	0.015	0.001	0.007	0.195	0.000	0.022	0.320	0.000	0.259	0.121	0.000	0.260				
Pres. Drop by Gravity	kg/cm²	-0.632			0.000	0.000	0.000	0.000	0.000	0.000	1.265	0.000	0.000	0.000	0.000	0.000	0.000	0.000	0.000	0.000	0.000	0.000				
Pressure Drop / 100 M	kg/cm²	0.015			0.195		0.195		0.195		0.195	0.006	0.082	0.253		0.261	0.268		0.216	0.364		0.223				
Equipment Pres. Drop	kg/cm²	0.07				0.2		0.20							0.5			2.5								
CV PRESSURE DROP	kg/cm²									0.50											0.5					

LINE IDENTIFICATION		1	2	3	4	5	6	7	8	9	10	11	12	13	14	15	16	17
SIMU. STREAM ID																		
SERVICE																	PUMP MIN. FLOW	
TYPE OF FLOW	(L/V/2PH)	LIQUID	LIQUID	LIQUID	LIQUID	LIQUID	LIQUID	LIQUID	2PH	2PH	2PH	2PH	2PH	2PH	2PH	2PH	LIQUID	2PH
OPERATING CONDITION																		
Temperature	C	42	42	42	42	42	42	55	53	60	60	120	120	60	60	115	42	120
Pressure @up	Kg/cm2.G								32.07	31.40	31.37	28.47	28.05	27.52	26.63	26.60		
Pressure @down	Kg/cm2.G	0.62	-0.01	-0.01	-0.01	-1.28	0.00	-0.01	31.88	31.38	31.05	28.21	28.05	27.52	26.63	26.34	-1.51	-0.13
PIPING INFORMATION																		
Nominal Size	inch	10.0	6.0	6.0	6.0	6.0	12.0	12.0	12.0	12.0	12.0	12.0	12.0	12.0	12.0	12.0	3.0	10.0
Schedule or Class	-	40	40	40	40	40	40	40	40	40	40	40	40	40	40	40	40	40
Line length,straight	m	50.0	5.0	5.0	5.0	5.0	5.0	5.0	45.0	5.0	70.0	70.0	5.0	5.0	5.0	68.2	50	20
Eqivalent Length Over Design Factor	-	0.25	0.50	0.50	0.50	0.50	0.50	0.50	0.50	0.50	0.50	0.50	0.50	0.50	0.50	0.50	0.5	0.5
Net Elevation Change	m	(8.5)	0.0	0.0	0.0	17.0	0.0	0.0	0.0	0.0	0.0	0.0	0.0	0.0	0.0	0.0	11	
Equivalent Length	m	66.4	7.7	7.7	7.7	7.7	8.5	8.5	76.9	8.5	119.6	119.6	8.5	8.5	8.5	116.6	70.4	33.1
Pipe inside Dia.	m	0.255	0.154	0.154	0.154	0.154	0.303	0.303	0.303	0.303	0.303	0.303	0.303	0.303	0.303	0.303	0.078	0.255
Wall Roughness	mm	0.046	0.046	0.046	0.046	0.046	0.046	0.046	0.046	0.046	0.046	0.046	0.046	0.046	0.046	0.046	0.046	0.046
LIQUID PHASE CALCULATION																		
Flow Rate	Kg/h	85,851	86,198	86,198	86,198	86,198	86,198	321,606	319,743	319,302	319,207	370,525	33,512	33,813	33,813	370,624	42,368	336,985
Flow Rate Design Margin	%	30	30	30	30	30	30	30	30	30	30	30	30	30	30	30	0	30
Density @PT	Kg/m3	743.3	746.3	746.3	746.3	746.3	746.3	722.7	723.8	717.2	717.2	645.0	645.0	713.6	713.6	651.6	743.3	645.0
Viscosity @PT	cP	0.280	0.290	0.290	0.290	0.290	0.290	0.260	0.260	0.240	0.240	0.150	0.150	0.240	0.240	0.160	0.280	0.150
Surface Tension	dyn/cm								18.3	17.5	17.5	10.8	10.8	17.4	17.4	11.4		10.8
Flow Rate, rated	kg/h	111,606	112,057	112,057	112,057	112,057	112,057	418,088	415,666	415,093	414,969	481,683	43,566	43,957	43,957	481,811	42,368	438,081
Vol. Flow	m3/hr	150.2	150.2	150.2	150.2	150.2	150.2	578.5	574.3	578.8	578.6	746.8	67.5	61.6	61.6	739.4	57.0	679.2
Velocity	m/s	0.82	2.24	2.24	2.24	2.24	0.58	2.23	2.21	2.23	2.23	2.87	0.26	0.24	0.24	2.84	3.32	3.71
Reynolds No	-	5.54E+05	8.87E+05	8.87E+05	8.87E+05	8.87E+05	4.51E+05	1.88E+06	1.86E+06	2.02E+06	2.02E+06	3.75E+06	3.39E+05	2.14E+05	2.14E+05	3.51E+06	6.87E+05	4.06E+06
Friction Factor	-	0.0151	0.0157	0.0157	0.0157	0.0157	0.0151	0.0136	0.0136	0.0136	0.0136	0.0133	0.0156	0.0166	0.0166	0.0134	0.0180	0.0137
Press. @Out	Kg/cm2.G	0.622	-0.015	-0.015	-0.015	-1.280	-0.001	-0.007	32.008	31.393	31.273	28.327	28.050	27.520	26.630	26.462	-1.515	-0.081
Pressure Drop by Friction	Kg/cm2	0.0100	0.015	0.015	0.015	0.015	0.001	0.007	0.062	0.007	0.097	0.143	0.000	0.000	0.000	0.138	0.679	0.081
Pressure Drop by Gravity	Kg/cm2	-0.632	0.000	0.000	0.000	1.265	0.000	0.000									0.836	
Dp / 100 m (by friction)	Kg/cm2	0.0151	0.1946	0.1946	0.1946	0.1946	0.0063	0.0821									0.9637	
VAPOR PHASE CALCULATION																		
Flow Rate,max op	Kg/h								3,133	3,575	3,669	4,557	415	113	113	4,457		4,170
Flow Rate Design Margin	%								30	30	30	30	30	30	30	30		30
Density @PT	Kg/m3								5.71	6.24	6.16	17.12	17.11	6.07	6.07	15.49		17.11
or MW	(-)								5.0	5.6	5.7	19.0	19.0	5.95	5.95	18.1		19.0
Compr. Z	(-)								1.01	1.01	1.01	0.99	0.99	1.01	1.01	0.99		0.99
Viscosity @PT	cP								0.011	0.012	0.012	0.015	0.015	0.012	0.012	0.015		0.015
Flow Rate,rated	Kg/h								4,073	4,648	4,770	5,924	540	147	147	5,794		5,421
Vol. Flow @in	m3/sec								0.20	0.21	0.22	0.10	0.01	0.01	0.01	0.10		0.09
Gas Density @in	Kg/m3								5.71	6.24	6.16	17.12	17.11	6.07	6.07	15.49		17.11
Velocity @in	m/s								2.75	2.87	2.98	1.33	0.12	0.09	0.09	1.44		1.73
Reynolds No	-								4.32E+05	4.52E+05	4.64E+05	4.61E+05	4.20E+04	1.43E+04	1.43E+04	4.51E+05		5.02E+05
Friction Factor	-								0.0152	0.0151	0.0151	0.0151	0.0222	0.0284	0.0284	0.0151		0.0152
Gas Dns @Out	Kg/m3								5.706	6.240	6.160	17.119	17.110	6.068	6.068	15.489		17.101
Velocity @Out	m/s								2.746	2.865	2.979	1.331	0.121	0.093	0.093	1.439		1.731
Mach no. @Out	-								0.003	0.003	0.004	0.003	0.000	0.000	0.000	0.003		0.019
Press. @Out	Kg/cm2.G								32.069	31.400	31.368	28.469	28.050	27.520	26.630	26.599		-0.001
Pressure Drop by Friction	Kg/cm2								0.001	0.000	0.002	0.001	0.000	0.000	0.000	0.001		0.001
Pressure Drop by Gravity	Kg/cm2																	
Dp / 100 m (by friction)	Kg/cm2																	

LINE IDENTIFICATION		1	2	3	4	5	6	7	8	9	10	11	12	13	14	15	16	17
TWO-PHASE CALCULATION METHOD SELECTION									DuklerII	DuklerII	DuklerII	DuklerII	DuklerII	DuklerII	DuklerII	DuklerII		
TWO-PHASE CALCULATION (HTFS)																		
Vapor Flow rate @ outlet	Kg/hr								4,073	4,648	4,770	5,924	540	147	147	5,794		5,421
Upward Angle	deg																	
C factor									10.969	10.449	10.516	6.616	9.415	13.545	13.545	6.884		6.051
Liquid + Vapor density	Kg/m3								415.811	406.720	401.440	485.580	511.961	580.034	580.034	480.327		482.667
Mach No.									0.037	0.038	0.039	0.029	0.003	0.002	0.002	0.032		0.203
Slip Ratio									1.655	1.660	1.675	1.362	1.736	1.689	1.689	1.373		1.338
Void Fraction									0.429	0.437	0.444	0.254	0.212	0.189	0.189	0.269		0.259
Pressure Drop by Acceleration									0.000	0.000	0.000	0.000	0.000	0.000	0.000	0.000		0.000
Pressure Drop by Friction	Kg/cm2								0.143	0.016	0.232	0.220	0.000	0.000	0.000	0.218		0.121
Pres. Drop by Gravity	Kg/cm2								0.000	0.000	0.000	0.000	0.000	0.000	0.000	0.000		0.000
TWO-PHASE CALCULATION (Homogeneous)																		
Bulk density	Kg/m3								250.67	243.95	238.66	343.22	342.44	395.37	395.37	336.85		342.52
Bulk viscosity, centipoise	cP								0.122	0.112	0.110	0.107	0.107	0.176	0.176	0.111		0.107
Velocity, m/sec	m/s								4.955	5.091	5.204	4.204	0.381	0.330	0.330	4.283		5.438
Reynolds number	-								3.09E+06	3.37E+06	3.44E+06	4.08E+06	3.70E+05	2.25E+05	2.25E+05	3.93E+06		4.43E+06
Friction factor	-								0.013	0.013	0.013	0.013	0.015	0.016	0.016	0.013		0.014
Pressure Drop by Friction	Kg/cm2								0.107	0.012	0.174	0.162	0.000	0.000	0.000	0.161		0.092
Pressure Drop by Gravity	Kg/cm2								0.000	0.000	0.000	0.000	0.000	0.000	0.000	0.000		0.000
TWO-PHASE CALCULATION (Dukler)																		
In-place density	Kg/m3								397.56	388.58	382.60	482.94	496.86	570.74	570.74	477.36		481.04
Reynolds number	-								3.30E+06	3.59E+06	3.63E+06	4.91E+06	4.32E+05	2.64E+05	2.64E+05	4.70E+06		5.34E+06
Friction factor	-								0.013	0.013	0.013	0.013	0.015	0.016	0.016	0.013		0.014
Pressure Drop by Friction	Kg/cm2								0.195	0.022	0.320	0.259	0.000	0.000	0.000	0.260		0.147
Pressure Drop by Gravity	Kg/cm2								0.000	0.000	0.000	0.000	0.000	0.000	0.000	0.000		0.000
Press. @Out	Kg/cm2.G								31.875	31.378	31.050	28.211	28.050	27.520	26.630	26.340		-0.126
Press. Drop	Kg/cm2								0.195	0.022	0.320	0.259	0.000	0.000	0.000	0.260		0.126
FLOW REGIME FOR VERTICAL																		
Simpson	X-Axis(Xd)								0.011	0.011	0.011	0.026	0.002	0.001	0.001	0.025		0.038
	Y-Axis(Fr)								0.142	0.156	0.161	0.127	0.012	0.005	0.005	0.130		0.181
	Flow Regime								Intermit	Intermit	Intermit	Intermit	Out of Range	Out of Range	Out of Range	Intermit		Intermit
Griffith and Wallies	X-Axis								8.26	8.72	9.11	5.94	0.05	0.04	0.04	6.17		11.85
	Y-Axis								0.55	0.56	0.57	0.32	0.32	0.28	0.28	0.34		0.32
	Flow Regime								Slug	Slug	Slug	Slug	Bubble	Bubble	Bubble	Slug		Slug
Taitel and Dukler	Flow Regime								Annular	Annular	Annular	Out of Range	Out of Range	Out of Range	Out of Range	Out of Range		Out of Range
(1) Bubble-Slug	X-Axis								21.93	23.09	24.00	11.84	1.08	0.75	0.75	12.65		15.39
Annular trans	Y-Axis								0.80	0.78	0.75	2.16	2.14	2.54	2.54	1.98		2.14
(2) Slug-Chum	X-Axis								2.87	2.95	3.02	2.44	0.22	0.19	0.19	2.48		3.44
Transition	Y-Axis								0.55	0.56	0.57	0.32	0.32	0.28	0.28	0.34		0.32
	2ph Re no.								4.18E+06	4.61E+06	4.72E+06	5.48E+06	4.97E+05	2.98E+05	2.98E+05	5.29E+06		5.95E+06
(3) Annular-Churn	X-Axis								8.59	7.90	7.66	12.45	11.03	21.09	21.09	12.04		12.49
Slug Trans.	Y-Axis								1.95	2.15	2.22	1.93	0.18	0.07	0.07	1.95		2.51
FLOW REGIME FOR HORIZONTAL																		
Taitel and Dukler	X-Axis(Xp)								8.59	7.90	7.66	12.45	11.03	21.09	21.09	12.04		12.49
	Y-Axis(Fr)								0.14	0.16	0.16	0.13	0.01	0.01	0.01	0.13		0.18
	Y-Axis(Xt)								0.93	0.31	1.17	1.51	0.04	0.04	0.04	1.47		1.13
	Y-Axis(Xk)								193.83	221.09	228.32	246.69	6.76	2.31	2.31	244.04		364.16
	Flow Regime								Slug	Slug	Bubble	Bubble	Wavy	Out of Range	Out of Range	Bubble		Bubble
Baker	X-Axis								595.89	556.11	538.22	1182.47	1174.02	1845.14	1849.38	1111.58		1174.89
	Y-Axis								6217	6815	7039	5530	504	219	219	5657		7185
	Flow Regime								Bubble or Froth	Bubble or Froth	Bubble or Froth	Bubble or Froth	Plug	Plug	Plug	Bubble or Froth		ubble or Froth

30-P-102A/B

LOTTE E&C 롯데건설주식회사

JOB NO.		PREPD BY:	J.H.Kim	DATE:	Sep. 26 '22	PAGE:	1/3	0
SERVICE	GHU-I RECYCLE PUMP (PATH1)	CHKD BY:	J.H.Myung	APPD BY:	J.Y.Kim			

*** Result**

1) NPSHA
Datasheet : 7.03 m
Calculation : 7.03 m
-> No problem

2) Diff. Pressure
Datasheet : 7.69 kg/cm2
PATH1 Calculation : 7.69 kg/cm2
-> No problem

3) Line Size
Referece
- Suc. : Velocity : 1.2 ~ 2.4 m/s, ΔP/100m : 0.23 kg/cm2
- Disch. : Velocity : 3.0 ~ 4.6 m/s, ΔP/100m : 0.46 kg/cm2

PATH 1

GOVERNING

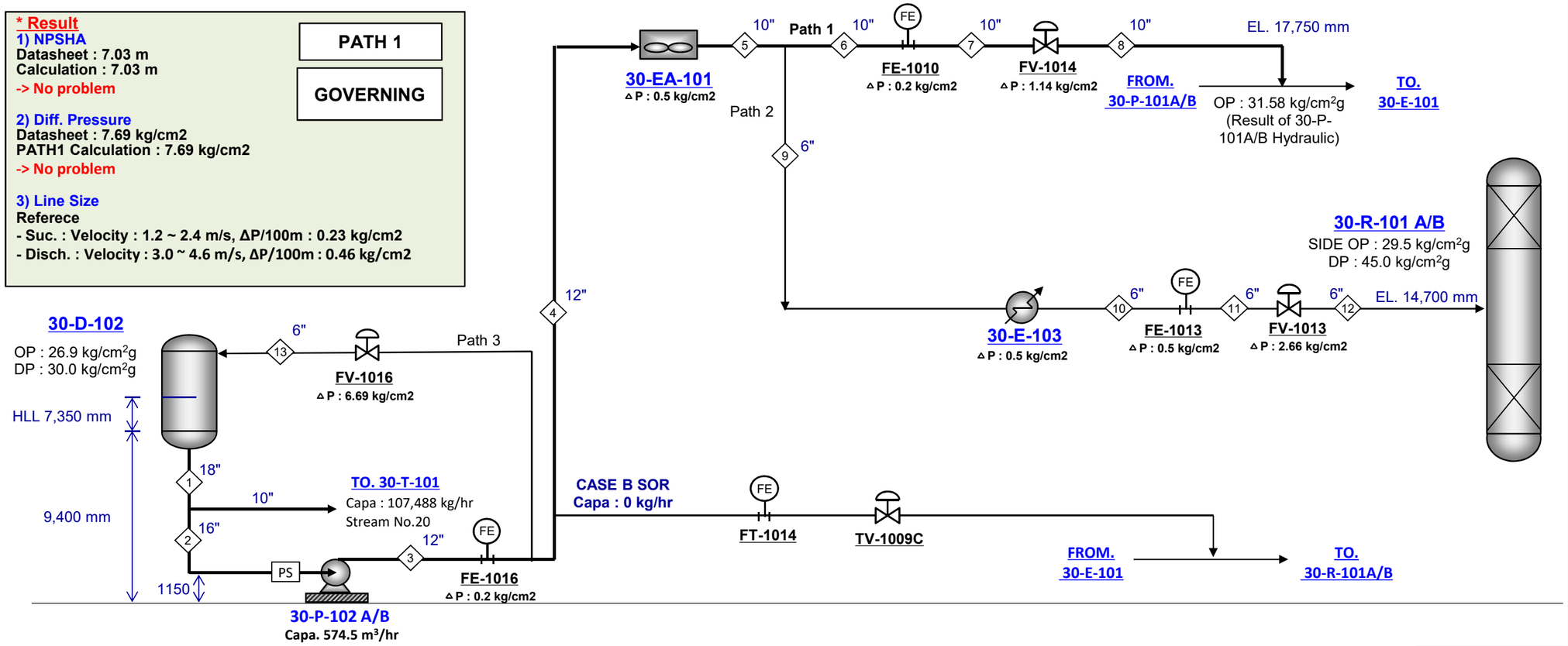

NOTE : 1. Assumed Data as below.
- Permanent Strainer △P = 0.07 kg/cm2
- Flow Element △P = 0.2 kg/cm2
- Destination Elevation of Path1 = 17.75 m

CV Input Data		
Item No.		
Des. Cap.		
Density		
D.P		
Char.		

PUMP CALCULATION

ITEM NUMBER	`30-P-102 A/B	
SUCTION		
Flow Rate	574.5	m3/hr
Operating Pres.	26.9	kg/cm².G
Design Pres.	30.0	kg/cm².G
Min. Static Head	9.4	meter
Max. Static Head	16.8	meter
Pump Shaft Level	1.15	meter
Vapor Pres.	27.933	kg/cm².A
Allowance	0	meter
Pipe Friction Loss	0.009	kg/cm²
Strainer	0.07	kg/cm²
Others		kg/cm²
Net Suction Pres.	27.36	kg/cm².G
Max. Suction Pres.	31.02	kg/cm².G
NPSH Available	7.03	meter
DISCHARGE		
Operating Pres.	31.58	kg/cm².G
Max. Static Head	17.8	meter
Pipe friction Loss	0.166	kg/cm².G
Pipe Gravity Loss	1.185	kg/cm³.G
Equip. Pres. Drop	0.9	kg/cm².G
Control Valves	1.1	kg/cm².G
Others	0.08	kg/cm².G
Disch. Press. Req'd	35.05	kg/cm².G
Diff. Pres.	7.69	kg/cm²
Diff. Head (Net)	118	meter
Hydr. Horsepower	120.4	KW
Est. Efficieny		%
Est. BHP		KW
Est. Shut-off Pres.	40.63	kg/cm².G
C.V dp / Friction	99.44	%

CONTROL VALVES

ITEM NO.	CAL. CV	RTD CV	% OPEN

		SUCTION			DISCHARGE																	
STREAM ID	UNIT	1	2		3	FE-1016	4	30-EA-101	5	6	FE-1010	7	FV-1014	8								
Design Case																						
Phase		LIQUID	LIQUID		LIQUID		LIQUID		LIQUID	LIQUID		LIQUID		LIQUID								
Vapor Fraction																						
Normal Flow Rate	kg/hr	370,625	287,962		287,962		287,962		287,962	235,756		235,756		235,756								
Over Design	%	30	30		30		30		30	30		30		30								
Rated Flow Rate	kg/hr	481,813	374,351		374,351		374,351		374,351	306,483		306,483		306,483								
Temperature	°C	115.0	115.0		115.0		115.0		60.0	60.0		60.0		60.0								
Pressure @Inlet	kg/cm²G	26.90	26.90		35.05	35.05	34.85	34.79	34.29	34.28	34.27	34.07	34.06	32.92								
Pressure @Destination	kg/cm²G	26.90	27.36		35.05	34.85	34.79	34.29	34.28	34.27	34.07	34.06	32.92	31.66								
Line Size	inch	18	16		12		12		10	10		10		10								
Equivalent Length	M	7.1	36.0		8.5		76.9		8.3	8.3		8.3		66								
Elevation Change	M	0.0	-8.3		0.0		0.0		0.0	0.0		0.0		17								
Fluid, Density	kg/m³	651.6	651.6		653.4		653.4		714.2	714.1		714.1		714.1								
Fluid, Viscosity	cP	0.16	0.16		0.16		0.16		0.24	0.24		0.24		0.24								
Velocity	m/sec	1.42	1.40		2.20		2.20		2.86	2.34		2.34		2.34								
Pres. Drop by Friction	kg/cm²	0.001	0.008		0.006	0.000	0.055	0.000	0.014	0.009	0.000	0.009	0.000	0.073								
Pres. Drop by Gravity	kg/cm²	0.000	-0.538		0.000	0.000	0.000	0.000	0.000	0.000	0.000	0.000	0.000	1.185								
Pressure Drop / 100 M	kg/cm²	0.020	0.022		0.072		0.072		0.164	0.110		0.110		0.110								
Equipment Pres. Drop	kg/cm²		0.07			0.20		0.5			0.20											
CV PRESSURE DROP	kg/cm²												1.14									

LOTTE E&C 롯데건설주식회사	JOB NO.		PREPD BY: J.H.Kim	DATE: Sep. 26 '22	PAGE: 2/3	0
	SERVICE	GHU-I RECYCLE PUMP (PATH2)	CHKD BY: J.H.Myung	APPD BY: J.Y.Kim		

*** Result**

1) NPSHA
Datasheet : 7.03 m
Calculation : 7.03 m
-> No problem

2) Diff. Pressure
Datasheet : 7.69 kg/cm2
PATH2 Calculation : 7.69 kg/cm2
-> No problem

3) Line Size
Referece
- Suc. : Velocity : 1.2 ~ 2.4 m/s, ΔP/100m : 0.23 kg/cm2
- Disch. : Velocity : 3.0 ~ 4.6 m/s, ΔP/100m : 0.46 kg/cm2

PATH 2

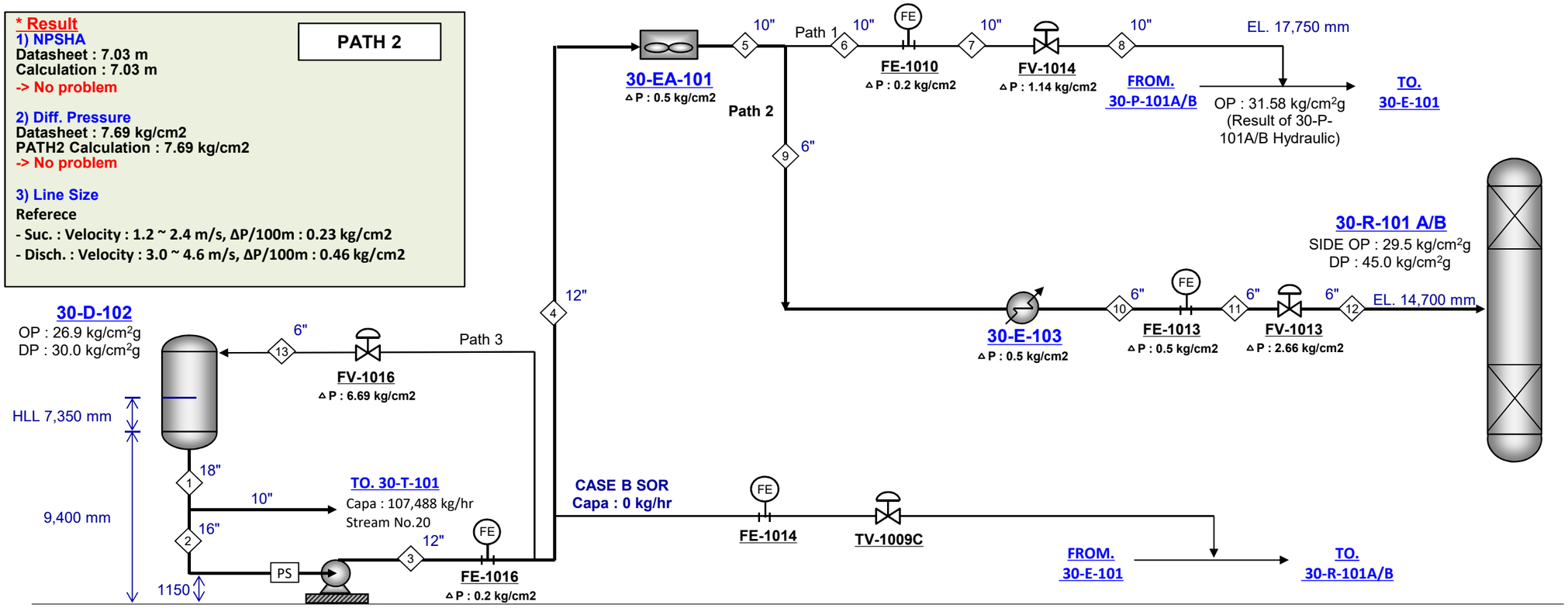

PUMP CALCULATION		
ITEM NUMBER	`30-P-102 A/B	
SUCTION		
Flow Rate	574.5	m3/hr
Operating Pres.	26.9	kg/cm^2.G
Design Pres.	30.0	kg/cm^2.G
Min. Static Head	9.4	meter
Max. Static Head	16.8	meter
Pump Shaft Level	1.15	meter
Vapor Pres.	27.933	kg/cm^2.A
Allowance	0	meter
Pipe Friction Loss	0.009	kg/cm^2
Strainer	0.07	kg/cm^2
Others		kg/cm^2
Net Suction Pres.	27.36	kg/cm^2.G
Max. Suction Pres.	31.02	kg/cm^2.G
NPSH Available	7.03	meter
DISCHARGE		
Operating Pres.	29.5	kg/cm^2.G
Max. Static Head	14.7	meter
Pipe friction Loss	0.195	kg/cm^2.G
Pipe Gravity Loss	0.994	kg/cm$^{3.G}$
Equip. Pres. Drop	1.7	kg/cm^2.G
Control Valves	2.7	kg/cm^2.G
Others		kg/cm^2.G
Disch. Press. Req'd	35.05	kg/cm^2.G
Diff. Pres.	7.69	kg/cm^2
Diff. Head (Net)	118	meter
Hydr. Horsepower	120.3	KW
Est. Efficieny		%
Est. BHP		KW
Est. Shut-off Pres.	40.63	kg/cm^2.G
C.V dp / Friction	140.40	%

NOTE : 1. Assumed Data as below.
- Permanent Strainer △P = 0.07 kg/cm2
- Flow Element △P = 0.2 kg/cm2

CV Input Data		
Item No.		
Des. Cap.		
Density		
D.P		
Char.		

CONTROL VALVES

ITEM NO.	CAL. CV	RTD CV	% OPEN

		SUCTION			DISCHARGE																	
STREAM ID	UNIT	1	2		3	FE-1016	4	30-EA-101	5	9	30-E-103	10	FE-1013	11	FV-1013	12						
Design Case																						
Phase		LIQUID	LIQUID		LIQUID		LIQUID		LIQUID	LIQUID		LIQUID		LIQUID		2PH						
Vapor Fraction																0.000						
Normal Flow Rate	kg/hr	370,625	287,962		287,962		287,962		287,962	52,206		52,206		52,206		52,206						
Over Design	%	30	30		30		30		30	30		30		30		30						
Rated Flow Rate	kg/hr	481,813	374,351		374,351		374,351		374,351	67,868		67,868		67,868		67,868						
Temperature	°C	115.0	115.0		115.0		115.0		60.0	60.0		40.0		40.0		40.0						
Pressure @Inlet	kg/cm^{2}G	26.90	26.90		35.05	35.04	34.84	34.79	34.29	34.27	34.20	33.70	33.70	33.20	32.20	29.54						
Pressure @Destination	kg/cm^{2}G	26.90	27.36		35.04	34.84	34.79	34.29	34.27	34.20	33.70	33.70	33.20	32.20	29.54	29.50						
Line Size	inch	18	16		12		12		10	6		6		6		6						
Equivalent Length	M	7.1	36.0		8.5		76.9		8.3	92.0		7.7		8		50						
Elevation Change	M	0.0	-8.3		0.0		0.0		0.0	0.0		0.0		14		0						
Fluid, Density	kg/m^3	651.6	651.6		653.4		653.4		714.2	714.2		733.9		733.9		720.6						
Fluid, Viscosity	cP	0.16	0.16		0.16		0.16		0.24	0.24		0.28		0.28								
Velocity	m/sec	1.42	1.40		2.20		2.20		2.86	1.42		1.38		1.38								
Pres. Drop by Friction	kg/cm^2	0.001	0.008		0.006	0.000	0.055	0.000	0.014	0.070	0.000	0.006	0.000	0.006	0.000	0.039						
Pres. Drop by Gravity	kg/cm^2	0.000	-0.538		0.000	0.000	0.000	0.000	0.000	0.000	0.000	0.000	0.000	0.994	0.000	0.000						
Pressure Drop / 100 M	kg/cm^2	0.020	0.022		0.072		0.072		0.164	0.076		0.075		0.075		0.077						
Equipment Pres. Drop	kg/cm^2		0.07			0.20		0.5			0.5		0.50									
CV PRESSURE DROP	kg/cm^2														2.66							

LOTTE E&C 롯데건설주식회사	JOB NO.		PREPD BY: J.H.Kim	DATE: Sep. 26 '22	PAGE: 3/3	0
	SERVICE	GHU-I RECYCLE PUMP (PATH3)	CHKD BY: J.H.Myung	APPD BY: J.Y.Kim		

*** Result**

1) NPSHA
Datasheet : 7.03 m
Calculation : 7.15 m
-> No problem

2) Diff. Pressure
Datasheet : 7.69 kg/cm2
PATH1 Calculation : 7.69 kg/cm2
-> No problem

3) Line Size
Referece
- Suc. : Velocity : 1.2 ~ 2.4 m/s, ΔP/100m : 0.23 kg/cm2
- Disch. : Velocity : 3.0 ~ 4.6 m/s, ΔP/100m : 0.46 kg/cm2

PATH 3

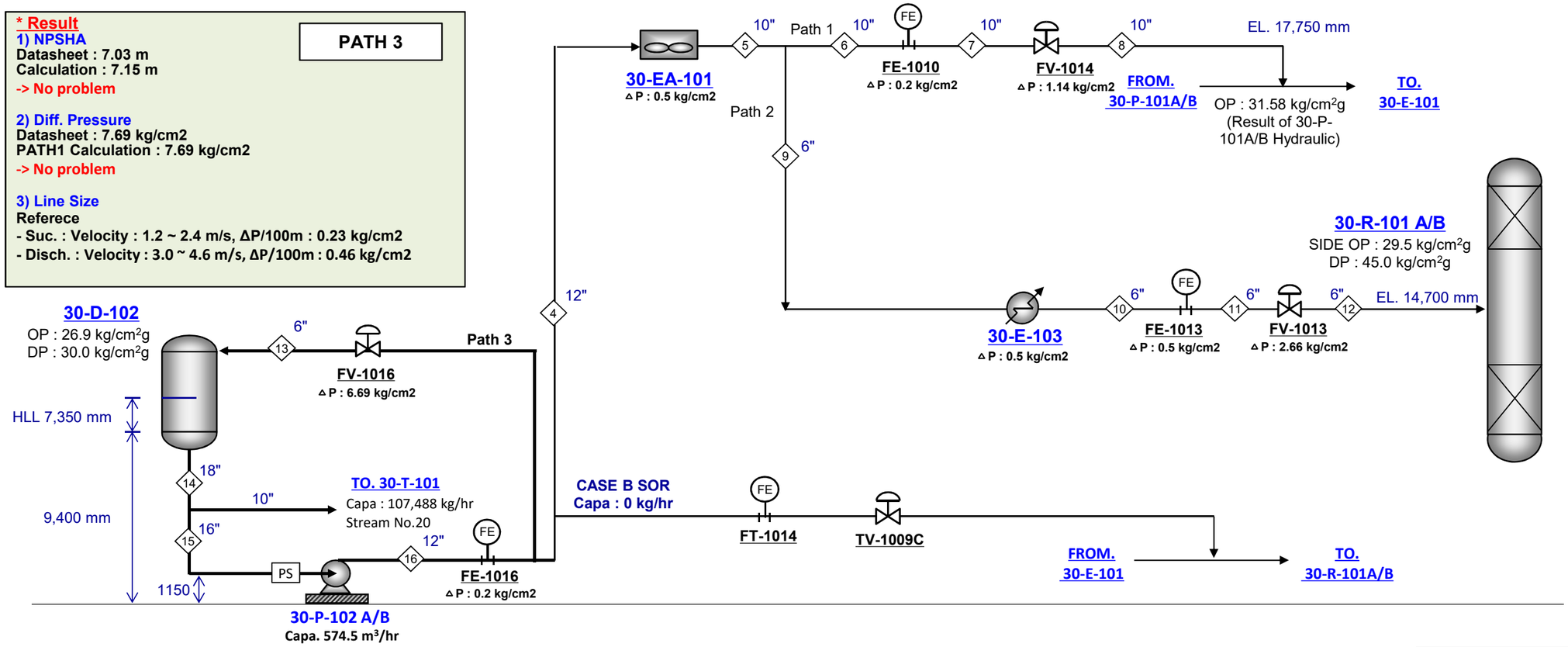

NOTE : 1. Assumed Data as below.
- Permanent Strainer △P = 0.07 kg/cm2
- Flow Element △P = 0.2 kg/cm2

CV Input Data		
Item No.		
Des. Cap.		
Density		
D.P		
Char.		

PUMP CALCULATION

ITEM NUMBER	`30-P-102 A/B	
SUCTION		
Flow Rate	574.5	m3/hr
Operating Pres.	26.9	kg/cm².G
Design Pres.	30.0	kg/cm².G
Min. Static Head	9.4	meter
Max. Static Head	16.8	meter
Pump Shaft Level	1.15	meter
Vapor Pres.	27.933	kg/cm².A
Allowance	0	meter
Pipe Friction Loss	0.001	kg/cm²
Strainer	0.07	kg/cm²
Others		kg/cm²
Net Suction Pres.	27.37	kg/cm².G
Max. Suction Pres.	31.02	kg/cm².G
NPSH Available	7.15	meter
DISCHARGE		
Operating Pres.	26.9	kg/cm².G
Max. Static Head	18.5	meter
Pipe friction Loss	0.138	kg/cm².G
Pipe Gravity Loss	1.131	kg/cm³.G
Equip. Pres. Drop	0.2	kg/cm².G
Control Valves	6.7	kg/cm².G
Others		kg/cm².G
Disch. Press. Req'd	35.06	kg/cm².G
Diff. Pres.	7.69	kg/cm²
Diff. Head (Net)	118	meter
Hydr. Horsepower	46.3	KW
Est. Efficieny		%
Est. BHP		KW
Est. Shut-off Pres.	40.63	kg/cm².G
C.V dp / Friction	1979.22	%

CONTROL VALVES

ITEM NO.	CAL. CV	RTD CV	% OPEN

		SUCTION			DISCHARGE																	
STREAM ID	UNIT	14	15		16	FE-1016	FV-1016	13														
Design Case																						
Phase		LIQUID	LIQUID		LIQUID			LIQUID														
Vapor Fraction																						
Normal Flow Rate	kg/hr	143,971	143,971		143,971			143,971														
Over Design	%	0	0		0			0														
Rated Flow Rate	kg/hr	143,971	143,971		143,971			143,971														
Temperature	°C	115.0	115.0		115.0			115.0														
Pressure @Inlet	kg/cm²G	26.90	26.90		35.06	35.06	34.86	28.17														
Pressure @Destination	kg/cm²G	26.90	27.37		35.06	34.86	28.17	26.90														
Line Size	inch	18	16		12			6														
Equivalent Length	M	7.1	36.0		8.5			38.3														
Elevation Change	M	0.0	-8.3		0.0			17.4														
Fluid, Density	kg/m³	651.6	651.6		653.4			651.6														
Fluid, Viscosity	cP	0.16	0.16		0.16			0.16														
Velocity	m/sec	0.43	0.54		0.85			3.29														
Pres. Drop by Friction	kg/cm²	0.000	0.001		0.001	0.000	0.000	0.137														
Pres. Drop by Gravity	kg/cm²	0.000	-0.538		0.000	0.000	0.000	1.131														
Pressure Drop / 100 M	kg/cm²	0.002	0.004		0.011			0.358														
Equipment Pres. Drop	kg/cm²		0.07			0.20																
CV PRESSURE DROP	kg/cm²						6.69															

LINE IDENTIFICATION		1	2	3	4	5	6	7	8	9	10	11	12	13	14	15	16	17
SIMU. STREAM ID		PUMP D/S					Path 1(17)	(17)	(17)	Path 2(18)	(19)	(19)	(19)					
SERVICE														PUMP MIN. FLOW				
TYPE OF FLOW	(L/V/2PH)	LIQUID	LIQUID	LIQUID	LIQUID	LIQUID	LIQUID	LIQUID	LIQUID	LIQUID	LIQUID	LIQUID	2PH	LIQUID	LIQUID	LIQUID	LIQUID	
OPERATING CONDITION																		
Temperature	C	115	115	115	115	60	60	60	60	60	40	40	40	115	115	115	115	
Pressure @up	Kg/cm2.G																	
Pressure @down	Kg/cm2.G	0.00	0.53	-0.01	-0.06	-0.01	-0.01	-0.01	-1.26	-0.07	-0.01	-1.00	-0.04	-1.27	0.00	0.54	0.00	
PIPING INFORMATION																		
Nominal Size	inch	18.0	16.0	12.0	12.0	10.0	10.0	10.0	10.0	6.0	6.0	6.0	6.0	6.0	18.0	16.0	12.0	
Schedule or Class	-	40	40	40	40	40	40	40	40	40	40	40	40	40	40	40	40	
Line length,straight	m	5.0	20.0	5.0	45.0	5.0	5.0	5.0	40.0	60.0	5.0	5.0	32.5	25.0	5.0	20.0	5.0	
Eqivalent Length Over Design Factor	-	0.25	0.50	0.50	0.50	0.50	0.50	0.50	0.50	0.50	0.50	0.50	0.50	0.50	0.25	0.50	0.50	
Net Elevation Change	m	0.0	(8.3)	0.0	0.0	0.0	0.0	0.0	16.6	0.0	0.0	13.6	0.0	17.4	0.0	(8.3)	0.0	
Equivalent Length	m	7.1	36.0	8.5	76.9	8.3	8.3	8.3	66.3	92.0	7.7	7.7	49.8	38.3	7.1	36.0	8.5	
Pipe inside Dia.	m	0.429	0.381	0.303	0.303	0.255	0.255	0.255	0.255	0.154	0.154	0.154	0.154	0.154	0.429	0.381	0.303	
Wall Roughness	mm	0.046	0.046	0.046	0.046	0.046	0.046	0.046	0.046	0.046	0.046	0.046	0.046	0.046	0.046	0.046	0.046	
LIQUID PHASE CALCULATION																		
Flow Rate	Kg/h	370,625	287,962	287,962	287,962	287,962	235,756	235,756	235,756	52,206	52,206	52,206	52,198	143,971	143,971	143,971	143,971	
Flow Rate Design Margin	%	30	30	30	30	30	30	30	30	30	30	30	30	0	0	0	0	
Density @PT	Kg/m3	651.6	651.6	653.4	653.4	714.2	714.1	714.1	714.1	714.2	733.9	733.9	733.9	651.6	651.6	651.6	653.4	
Viscosity @PT	cP	0.160	0.160	0.160	0.160	0.240	0.240	0.240	0.240	0.240	0.280	0.280	0.280	0.160	0.160	0.160	0.160	
Surface Tension	dyn/cm												19.7					
Flow Rate, rated	kg/h	481,813	374,351	374,351	374,351	374,351	306,483	306,483	306,483	67,868	67,868	67,868	67,857	143,971	143,971	143,971	143,971	
Vol. Flow	m3/hr	739.4	574.5	572.9	572.9	524.2	429.2	429.2	429.2	95.0	92.5	92.5	92.5	221.0	221.0	221.0	220.3	
Velocity	m/s	1.42	1.40	2.20	2.20	2.86	2.34	2.34	2.34	1.42	1.38	1.38	1.38	3.29	0.43	0.54	0.85	
Reynolds No	-	2.48E+06	2.17E+06	2.73E+06	2.73E+06	2.17E+06	1.77E+06	1.77E+06	1.77E+06	6.49E+05	5.56E+05	5.56E+05	5.56E+05	2.07E+06	7.42E+05	8.35E+05	1.05E+06	
Friction Factor	-	0.0128	0.0131	0.0135	0.0135	0.0140	0.0141	0.0141	0.0141	0.0160	0.0161	0.0161	0.0161	0.0153	0.0139	0.0139	0.0141	
Press. @Out	Kg/cm2.G	-0.001	0.530	-0.006	-0.055	-0.014	-0.009	-0.009	-1.259	-0.070	-0.006	-1.000	-0.037	-1.268	0.000	0.536	-0.001	
Pressure Drop by Friction	Kg/cm2	0.0014	0.0081	0.006	0.055	0.014	0.009	0.009	0.073	0.070	0.006	0.006	0.037	0.137	0.000	0.001	0.001	
Pressure Drop by Gravity	Kg/cm2	0.000	-0.538	0.000	0.000	0.000	0.000	0.000	1.185	0.000	0.000	0.994		1.131	0.000	-0.538	0.000	
Dp / 100 m (by friction)	Kg/cm2	0.0201	0.0224	0.0718	0.0718	0.1636	0.1105	0.1105	0.1105	0.0758	0.0745	0.0745		0.3576	0.0020	0.0035	0.0111	
VAPOR PHASE CALCULATION																		
Flow Rate,max op	Kg/h												8					
Flow Rate Design Margin	%												30					
Density @PT	Kg/m3												4.66					
or MW	(-)												4.1					
Compr. Z	(-)												1.01					
Viscosity @PT	cP												0.010					
Flow Rate,rated	Kg/h												10					
Vol. Flow @in	m3/sec												0.00					
Gas Density @in	Kg/m3												4.66					
Velocity @in	m/s												0.03					
Reynolds No	-												2.39E+03					
Friction Factor	-												0.0268					
Gas Dns @Out	Kg/m3												4.656					
Velocity @Out	m/s												0.033					
Mach no. @Out	-												0.000					
Press. @Out	Kg/cm2.G												0.000					
Pressure Drop by Friction	Kg/cm2												0.000					
Pressure Drop by Gravity	Kg/cm2																	
Dp / 100 m (by friction)	Kg/cm2																	

LINE IDENTIFICATION		1	2	3	4	5	6	7	8	9	10	11	12	13	14	15	16	17
TWO-PHASE CALCULATION METHOD SELECTION													DuklerII					
TWO-PHASE CALCULATION (HTFS)																		
Vapor Flow rate @ outlet	Kg/hr												10					
Upward Angle	deg																	
C factor													12.212					
Liquid + Vapor density	Kg/m3												709.713					
Mach No.													0.018					
Slip Ratio													0.704					
Void Fraction													0.033					
Pressure Drop by Acceleration													0.000					
Pressure Drop by Friction	Kg/cm2												0.038					
Pres. Drop by Gravity	Kg/cm2												0.000					
TWO-PHASE CALCULATION (Homogeneous)																		
Bulk density	Kg/m3												551.31					
Bulk viscosity, centipoise	cP												0.274					
Velocity, m/sec	m/s												1.411					
Reynolds number	-												4.38E+05					
Friction factor	-												0.016					
Pressure Drop by Friction	Kg/cm2												0.030					
Pressure Drop by Gravity	Kg/cm2												0.000					
TWO-PHASE CALCULATION (Dukler)																		
In-place density	Kg/m3												720.58					
Reynolds number	-												5.67E+05					
Friction factor	-												0.016					
Pressure Drop by Friction	Kg/cm2												0.039					
Pressure Drop by Gravity	Kg/cm2												0.000					
Press. @Out	Kg/cm2.G												-0.039					
Press. Drop	Kg/cm2												0.039					
FLOW REGIME FOR VERTICAL																		
Simpson	X-Axis(Xd)												0.010					
	Y-Axis(Fr)												0.002					
	Flow Regime												Out of Range					
Griffith and Wallies	X-Axis												1.32					
	Y-Axis												0.02					
	Flow Regime												Bubble					
Taitel and Dukler	Flow Regime												Out of Range					
(1) Bubble-Slug	X-Axis												0.26					
Annular trans	Y-Axis												41.39					
(2) Slug-Chum	X-Axis												1.15					
Transition	Y-Axis												0.02					
	2ph Re no.												5.70E+05					
(3) Annular-Churn	X-Axis												403.37					
Slug Trans.	Y-Axis												0.02					
FLOW REGIME FOR HORIZONTAL																		
Taitel and Dukler	X-Axis(Xp)												403.37					
	Y-Axis(Fr)												0.00					
	Y-Axis(Xt)												0.71					
	Y-Axis(Xk)												1.61					
	Flow Regime												Out of Range					
Baker	X-Axis												32691.65					
	Y-Axis												68					
	Flow Regime												Out of Range					

LOTTE E&C 롯데건설주식회사	JOB NO.		PREPD BY: J.H.Kim	DATE: Sep. 26 '22	PAGE: 1/2	0
	SERVICE	GHU-I RECYCLE PUMP (PATH1)	CHKD BY: J.H.Myung	APPD BY: J.Y.Kim		

*** Result**

1) NPSHA
Datasheet : 7.03 m
Calculation : 7.04 m
-> No problem

2) Diff. Pressure
Datasheet : 7.69 kg/cm2
PATH1 Calculation : 7.53 kg/cm2
-> No problem

3) Line Size
Referece
- Suc. : Velocity : 1.2 ~ 2.4 m/s, ΔP/100m : 0.23 kg/cm2
- Disch. : Velocity : 3.0 ~ 4.6 m/s, ΔP/100m : 0.46 kg/cm2

PATH 1

GOVERNING

CASE B EOR

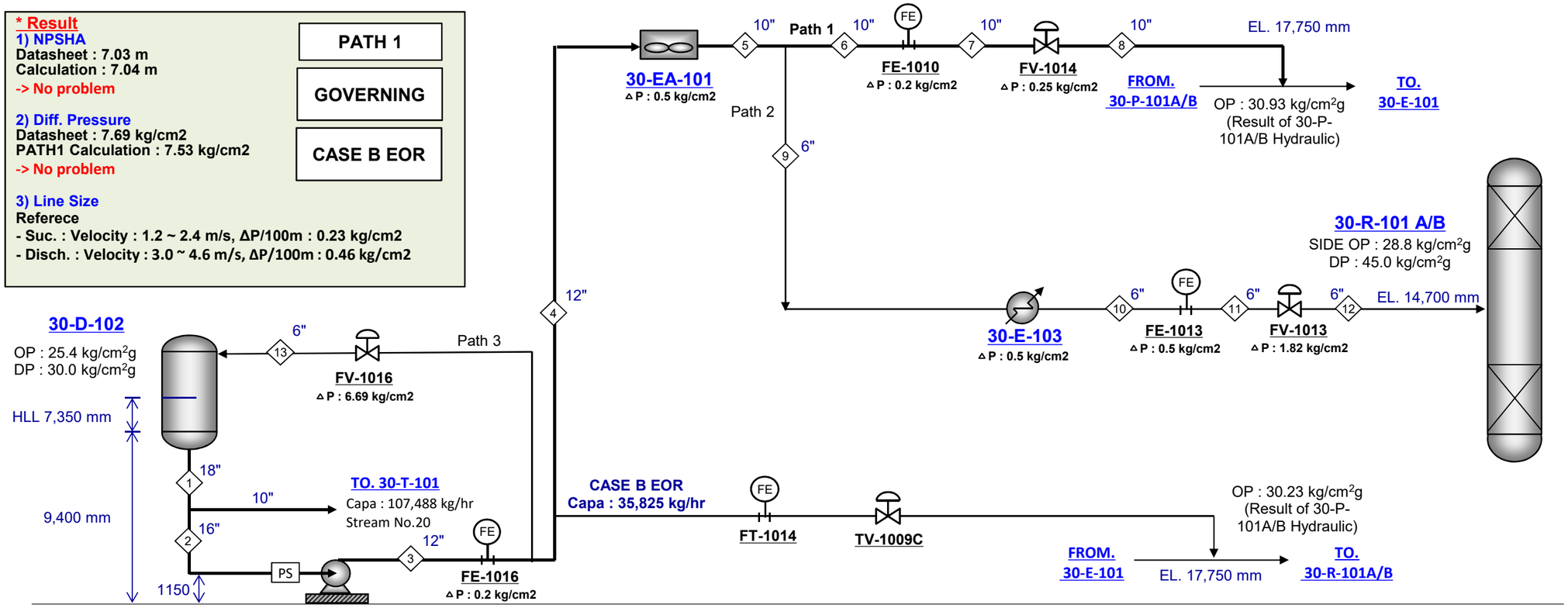

PUMP CALCULATION		
ITEM NUMBER	`30-P-102 A/B	
SUCTION		
Flow Rate	507.9	m3/hr
Operating Pres.	25.4	kg/cm^2.G
Design Pres.	30.0	kg/cm^2.G
Min. Static Head	9.4	meter
Max. Static Head	16.8	meter
Pump Shaft Level	1.15	meter
Vapor Pres.	26.433	kg/cm^2.A
Allowance	0	meter
Pipe Friction Loss	0.007	kg/cm^2
Strainer	0.07	kg/cm^2
Others		kg/cm^2
Net Suction Pres.	25.85	kg/cm^2.G
Max. Suction Pres.	31.00	kg/cm^2.G
NPSH Available	7.04	meter
DISCHARGE		
Operating Pres.	30.93	kg/cm^2.G
Max. Static Head	17.8	meter
Pipe friction Loss	0.116	kg/cm^2.G
Pipe Gravity Loss	1.189	kg/cm$^{3.G}$
Equip. Pres. Drop	0.9	kg/cm^2.G
Control Valves	0.3	kg/cm^2.G
Others		kg/cm^2.G
Disch. Press. Req'd	33.38	kg/cm^2.G
Diff. Pres.	7.53	kg/cm^2
Diff. Head (Net)	118	meter
Hydr. Horsepower	104.2	KW
Est. Efficieny		%
Est. BHP		KW
Est. Shut-off Pres.	40.42	kg/cm^2.G
C.V dp / Friction	24.61	%

NOTE : 1. Assumed Data as below.
- Permanent Strainer △P = 0.07 kg/cm2
- Flow Element △P = 0.2 kg/cm2
- Destination Elevation of Path1 = 17.75 m

CV Input Data		
Item No.		
Des. Cap.		
Density		
D.P		
Char.		

CONTROL VALVES			
ITEM NO.	CAL. CV	RTD CV	% OPEN

		SUCTION			DISCHARGE																	
STREAM ID	UNIT	1	2		3	FE-1016	4	30-EA-101	5	6	FE-1010	7	FV-1014	8								
Design Case																						
Phase		LIQUID	LIQUID		LIQUID		LIQUID		LIQUID	LIQUID		LIQUID		LIQUID								
Vapor Fraction																						
Normal Flow Rate	kg/hr	330,586	250,021		250,021		222,463		222,463	204,587		204,587		204,587								
Over Design	%	30	30		30		30		30	30		30		30								
Rated Flow Rate	kg/hr	429,762	325,027		325,027		289,202		289,202	265,963		265,963		265,963								
Temperature	°C	126.0	126.0		126.0		126.0		60.0	60.0		60.0		60.0								
Pressure @Inlet	kg/cm^{2}G	25.40	25.40		33.38	33.38	33.18	33.15	32.65	32.64	32.63	32.43	32.42	32.17								
Pressure @Destination	kg/cm^{2}G	25.40	25.85		33.38	33.18	33.15	32.65	32.64	32.63	32.43	32.42	32.17	30.93								
Line Size	inch	18	16		12		12		10	10		10		10								
Equivalent Length	M	7.1	36.0		8.5		76.9		8.3	8.3		8.3		66								
Elevation Change	M	0.0	-8.3		0.0		0.0		0.0	0.0		0.0		17								
Fluid, Density	kg/m^3	639.9	639.9		642.2		642.2		716.2	716.2		716.2		716.2								
Fluid, Viscosity	cP	0.15	0.15		0.15		0.15		0.25	0.25		0.25		0.25								
Velocity	m/sec	1.29	1.24		1.95		1.73		2.20	2.03		2.03		2.03								
Pres. Drop by Friction	kg/cm^2	0.001	0.006		0.005	0.000	0.034	0.000	0.008	0.007	0.000	0.007	0.000	0.055								
Pres. Drop by Gravity	kg/cm^2	0.000	-0.528		0.000	0.000	0.000	0.000	0.000	0.000	0.000	0.000	0.000	1.189								
Pressure Drop / 100 M	kg/cm^2	0.016	0.017		0.055		0.044		0.098	0.084		0.084		0.084								
Equipment Pres. Drop	kg/cm^2		0.07			0.20		0.5			0.20											
CV PRESSURE DROP	kg/cm^2												0.25									

LOTTE E&C 롯데건설주식회사	JOB NO.		PREPD BY: J.H.Kim	DATE: Sep. 26 '22	PAGE: 2/2	0
	SERVICE	GHU-I RECYCLE PUMP (PATH2)	CHKD BY: J.H.Myung	APPD BY: J.Y.Kim		

*** Result**

1) NPSHA
Datasheet : 7.03 m
Calculation : 7.04 m
-> No problem

2) Diff. Pressure
Datasheet : 7.69 kg/cm2
PATH2 Calculation : 7.53 kg/cm2
-> No problem

3) Line Size
Referece
- Suc. : Velocity : 1.2 ~ 2.4 m/s, ΔP/100m : 0.23 kg/cm2
- Disch. : Velocity : 3.0 ~ 4.6 m/s, ΔP/100m : 0.46 kg/cm2

PATH 2

CASE B EOR

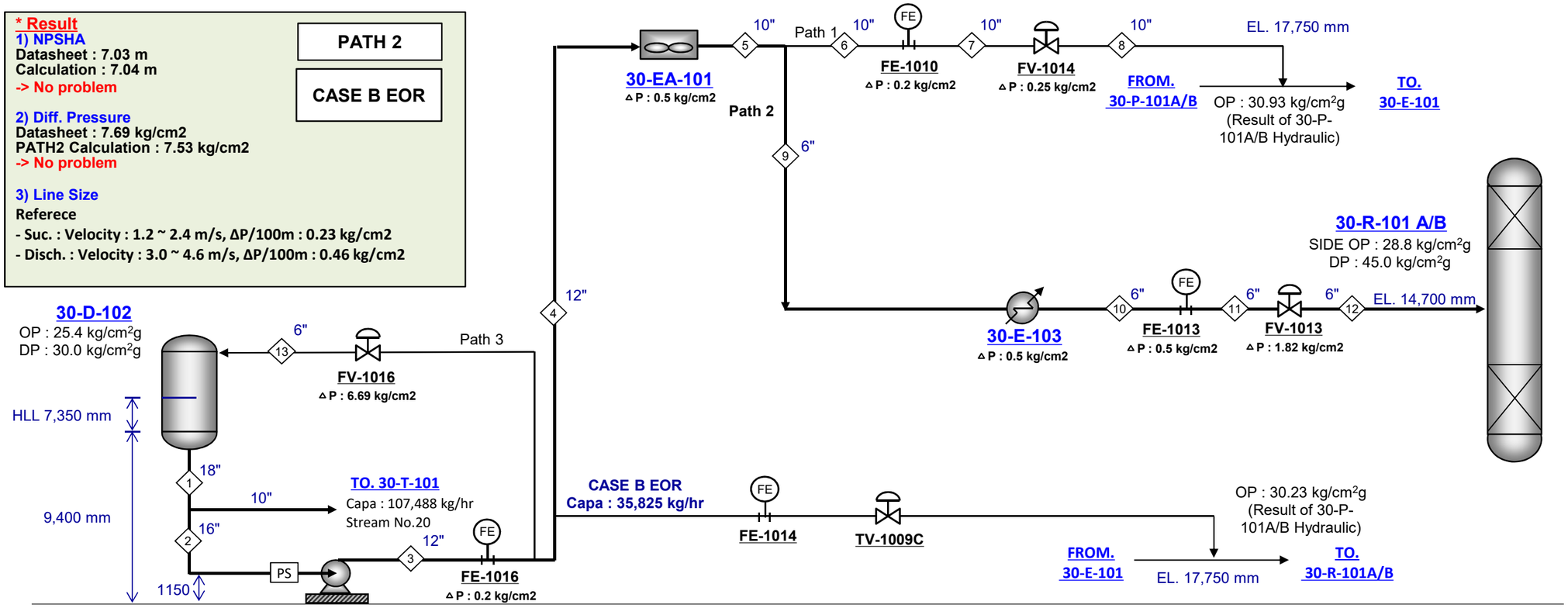

NOTE : 1. Assumed Data as below.
- Permanent Strainer △P = 0.07 kg/cm2
- Flow Element △P = 0.2 kg/cm2

CV Input Data		
Item No.		
Des. Cap.		
Density		
D.P		
Char.		

PUMP CALCULATION		
ITEM NUMBER	`30-P-102 A/B	
SUCTION		
Flow Rate	507.9	m3/hr
Operating Pres.	25.4	kg/cm2.G
Design Pres.	30.0	kg/cm2.G
Min. Static Head	9.4	meter
Max. Static Head	16.8	meter
Pump Shaft Level	1.15	meter
Vapor Pres.	26.433	kg/cm2.A
Allowance	0	meter
Pipe Friction Loss	0.007	kg/cm2
Strainer	0.07	kg/cm2
Others		kg/cm2
Net Suction Pres.	25.85	kg/cm2.G
Max. Suction Pres.	31.00	kg/cm2.G
NPSH Available	7.04	meter
DISCHARGE		
Operating Pres.	28.8	kg/cm2.G
Max. Static Head	14.7	meter
Pipe friction Loss	0.062	kg/cm2.G
Pipe Gravity Loss	0.997	kg/cm3.G
Equip. Pres. Drop	1.7	kg/cm2.G
Control Valves	1.8	kg/cm2.G
Others		kg/cm2.G
Disch. Press. Req'd	33.38	kg/cm2.G
Diff. Pres.	7.53	kg/cm2
Diff. Head (Net)	118	meter
Hydr. Horsepower	104.1	KW
Est. Efficieny		%
Est. BHP		KW
Est. Shut-off Pres.	40.41	kg/cm2.G
C.V dp / Friction	103.30	%

CONTROL VALVES			
ITEM NO.	CAL. CV	RTD CV	% OPEN

		SUCTION			DISCHARGE											
STREAM ID	UNIT	1	2		3	FE-1016	4	30-EA-101	5	9	30-E-103	10	FE-1013	11	FV-1013	12
Design Case																
Phase		LIQUID	LIQUID		LIQUID		LIQUID		LIQUID	LIQUID		LIQUID		LIQUID		2PH
Vapor Fraction																0.000
Normal Flow Rate	kg/hr	330,586	250,021		250,021		222,463		222,463	17,876		17,876		17,876		17,876
Over Design	%	30	30		30		30		30	30		30		30		30
Rated Flow Rate	kg/hr	429,762	325,027		325,027		289,202		289,202	23,239		23,239		23,239		23,239
Temperature	°C	126.0	126.0		126.0		126.0		60.0	60.0		40.0		40.0		40.0
Pressure @Inlet	kg/cm2G	25.40	25.40		33.38	33.37	33.17	33.14	32.64	32.63	32.62	32.12	32.12	31.62	30.62	28.80
Pressure @Destination	kg/cm2G	25.40	25.85		33.37	33.17	33.14	32.64	32.63	32.62	32.12	32.12	31.62	30.62	28.80	28.80
Line Size	inch	18	16		12		12		10	6		6		6		6
Equivalent Length	M	7.1	36.0		8.5		76.9		8.3	92.0		7.7		8		50
Elevation Change	M	0.0	-8.3		0.0		0.0		0.0	0.0		0.0		14		0
Fluid, Density	kg/m3	639.9	639.9		642.2		642.2		716.2	716.4		735.6		735.6		730.9
Fluid, Viscosity	cP	0.15	0.15		0.15		0.15		0.25	0.25		0.28		0.28		
Velocity	m/sec	1.29	1.24		1.95		1.73		2.20	0.48		0.47		0.47		
Pres. Drop by Friction	kg/cm2	0.001	0.006		0.005	0.000	0.034	0.000	0.008	0.009	0.000	0.001	0.000	0.001	0.000	0.005
Pres. Drop by Gravity	kg/cm2	0.000	-0.528		0.000	0.000	0.000	0.000	0.000	0.000	0.000	0.000	0.000	0.997	0.000	0.000
Pressure Drop / 100 M	kg/cm2	0.016	0.017		0.055		0.044		0.098	0.010		0.010		0.010		0.010
Equipment Pres. Drop	kg/cm2		0.07			0.20		0.5			0.5		0.50			
CV PRESSURE DROP	kg/cm2														1.82	

LINE IDENTIFICATION		1	2	3	4	5	6	7	8	9	10	11	12	13	14	15	16	17
SIMU. STREAM ID		PUMP D/S					Path 1(17)	(17)	(17)	Path 2(18)	(19)	(19)	(19)					
SERVICE														PUMP MIN. FLOW				
TYPE OF FLOW	(L/V/2PH)	LIQUID	LIQUID	LIQUID	LIQUID	LIQUID	LIQUID	LIQUID	LIQUID	LIQUID	LIQUID	LIQUID	2PH	LIQUID				
OPERATING CONDITION																		
Temperature	C	126	126	126	126	60	60	60	60	60	40	40	40	115				
Pressure @up	Kg/cm2.G	25.40																
Pressure @down	Kg/cm2.G	25.40	0.52	0.00	-0.03	-0.01	-0.01	-0.01	-1.24	-0.01	0.00	-1.00	0.00	-1.26				
PIPING INFORMATION																		
Nominal Size	inch	18.0	16.0	12.0	12.0	10.0	10.0	10.0	10.0	6.0	6.0	6.0	6.0	6.0				
Schedule or Class	-	40	40	40	40	40	40	40	40	40	40	40	40	40				
Line length,straight	m	5.0	20.0	5.0	45.0	5.0	5.0	5.0	40.0	60.0	5.0	5.0	32.5	25.0				
Eqivalent Length Over Design Factor	-	0.25	0.50	0.50	0.50	0.50	0.50	0.50	0.50	0.50	0.50	0.50	0.50	0.50				
Net Elevation Change	m	0.0	(8.3)	0.0	0.0	0.0	0.0	0.0	16.6	0.0	0.0	13.6	0.0	17.4				
Equivalent Length	m	7.1	36.0	8.5	76.9	8.3	8.3	8.3	66.3	92.0	7.7	7.7	49.8	38.3				
Pipe inside Dia.	m	0.429	0.381	0.303	0.303	0.255	0.255	0.255	0.255	0.154	0.154	0.154	0.154	0.154				
Wall Roughness	mm	0.046	0.046	0.046	0.046	0.046	0.046	0.046	0.046	0.046	0.046	0.046	0.046	0.046				
LIQUID PHASE CALCULATION																		
Flow Rate	Kg/h	330,586	250,021	250,021	222,463	222,463	204,587	204,587	204,587	17,876	17,876	17,876	17,875	140,094				
Flow Rate Design Margin	%	30	30	30	30	30	30	30	30	30	30	30	30	0				
Density @PT	Kg/m3	639.9	639.9	642.2	642.2	716.2	716.2	716.2	716.2	716.4	735.6	735.6	735.6	651.6				
Viscosity @PT	cP	0.150	0.150	0.150	0.150	0.250	0.250	0.250	0.250	0.250	0.280	0.280	0.280	0.160				
Surface Tension	dyn/cm												19.8					
Flow Rate, rated	kg/h	429,762	325,027	325,027	289,202	289,202	265,963	265,963	265,963	23,239	23,239	23,239	23,238	140,094				
Vol. Flow	m3/hr	671.6	507.9	506.1	450.3	403.8	371.4	371.4	371.4	32.4	31.6	31.6	31.6	215.0				
Velocity	m/s	1.29	1.24	1.95	1.73	2.20	2.03	2.03	2.03	0.48	0.47	0.47	0.47	3.20				
Reynolds No	-	2.36E+06	2.01E+06	2.53E+06	2.25E+06	1.61E+06	1.48E+06	1.48E+06	1.48E+06	2.13E+05	1.91E+05	1.91E+05	1.91E+05	2.01E+06				
Friction Factor	-	0.0128	0.0131	0.0135	0.0135	0.0141	0.0142	0.0142	0.0142	0.0176	0.0178	0.0178	0.0178	0.0153				
Press. @Out	Kg/cm2.G	25.399	0.522	-0.005	-0.034	-0.008	-0.007	-0.007	-1.244	-0.009	-0.001	-0.997	-0.005	-1.260				
Pressure Drop by Friction	Kg/cm2	0.0012	0.0062	0.005	0.034	0.008	0.007	0.007	0.055	0.009	0.001	0.001	0.005	0.130				
Pressure Drop by Gravity	Kg/cm2	0.000	-0.528	0.000	0.000	0.000	0.000	0.000	1.189	0.000	0.000	0.997		1.131				
Dp / 100 m (by friction)	Kg/cm2	0.0163	0.0172	0.0552	0.0439	0.0985	0.0836	0.0836	0.0836	0.0097	0.0096	0.0096		0.3388				
VAPOR PHASE CALCULATION																		
Flow Rate,max op	Kg/h												1					
Flow Rate Design Margin	%												30					
Density @PT	Kg/m3												4.58					
or MW	(-)												4.1					
Compr. Z	(-)												1.01					
Viscosity @PT	cP												0.010					
Flow Rate,rated	Kg/h												1					
Vol. Flow @in	m3/sec												0.00					
Gas Density @in	Kg/m3												4.58					
Velocity @in	m/s												0.00					
Reynolds No	-												2.98E+02					
Friction Factor	-												0.2144					
Gas Dns @Out	Kg/m3												4.575					
Velocity @Out	m/s												0.004					
Mach no. @Out	-												0.000					
Press. @Out	Kg/cm2.G												0.000					
Pressure Drop by Friction	Kg/cm2												0.000					
Pressure Drop by Gravity	Kg/cm2																	
Dp / 100 m (by friction)	Kg/cm2																	

LINE IDENTIFICATION		1	2	3	4	5	6	7	8	9	10	11	12	13	14	15	16	17
TWO-PHASE CALCULATION METHOD SELECTION													DuklerII					
TWO-PHASE CALCULATION (HTFS)																		
Vapor Flow rate @ outlet	Kg/hr												1					
Upward Angle	deg																	
C factor													17.605					
Liquid + Vapor density	Kg/m3												724.517					
Mach No.													0.004					
Slip Ratio													0.584					
Void Fraction													0.015					
Pressure Drop by Acceleration													0.000					
Pressure Drop by Friction	Kg/cm2												0.005					
Pres. Drop by Gravity	Kg/cm2												0.000					
TWO-PHASE CALCULATION (Homogeneous)																		
Bulk density	Kg/m3												560.83					
Bulk viscosity, centipoise	cP												0.278					
Velocity, m/sec	m/s												0.475					
Reynolds number	-												1.48E+05					
Friction factor	-												0.018					
Pressure Drop by Friction	Kg/cm2												0.004					
Pressure Drop by Gravity	Kg/cm2												0.000					
TWO-PHASE CALCULATION (Dukler)																		
In-place density	Kg/m3												730.88					
Reynolds number	-												1.92E+05					
Friction factor	-												0.018					
Pressure Drop by Friction	Kg/cm2												0.005					
Pressure Drop by Gravity	Kg/cm2												0.000					
Press. @Out	Kg/cm2.G												-0.005					
Press. Drop	Kg/cm2												0.005					
FLOW REGIME FOR VERTICAL																		
Simpson	X-Axis(Xd)												0.003					
	Y-Axis(Fr)												0.000					
	Flow Regime												Out of Range					
Griffith and Wallies	X-Axis												0.15					
	Y-Axis												0.01					
	Flow Regime												Bubble					
Taitel and Dukler	Flow Regime												Out of Range					
(1) Bubble-Slug	X-Axis												0.03					
Annular trans	Y-Axis												111.17					
(2) Slug-Chum	X-Axis												0.39					
Transition	Y-Axis												0.01					
	2ph Re no.												1.92E+05					
(3) Annular-Churn	X-Axis												406.31					
Slug Trans.	Y-Axis												0.00					
FLOW REGIME FOR HORIZONTAL																		
Taitel and Dukler	X-Axis(Xp)												406.31					
	Y-Axis(Fr)												0.00					
	Y-Axis(Xt)												0.26					
	Y-Axis(Xk)												0.12					
	Flow Regime												Out of Range					
Baker	X-Axis												88296.08					
	Y-Axis												9					
	Flow Regime												Out of Range					

30-P-103A/B

LOTTE E&C 롯데건설주식회사

JOB NO.		PREPD BY:	J.H.Kim	DATE:	Sep. 26 '22	PAGE:	1/2	0
SERVICE	DEPENTANIZER REFLUX PUMP (PATH1)	CHKD BY:	J.H.Myung	APPD BY:	J.Y.Kim			

*** Result**

1) NPSHA
Datasheet : 7.08 m
Calculation : 7.08 m
-> No problem

2) Diff. Pressure
Datasheet : 4.14 kg/cm2
Calculation : 4.13 kg/cm2
-> No problem

3) Line Size
Referece
- Suc. : Velocity : 1.2 ~ 2.4 m/s, ΔP/100m : 0.23 kg/cm2
- Disch. : Velocity : 3.0 ~ 4.6 m/s, ΔP/100m : 0.46 kg/cm2

-> No problem

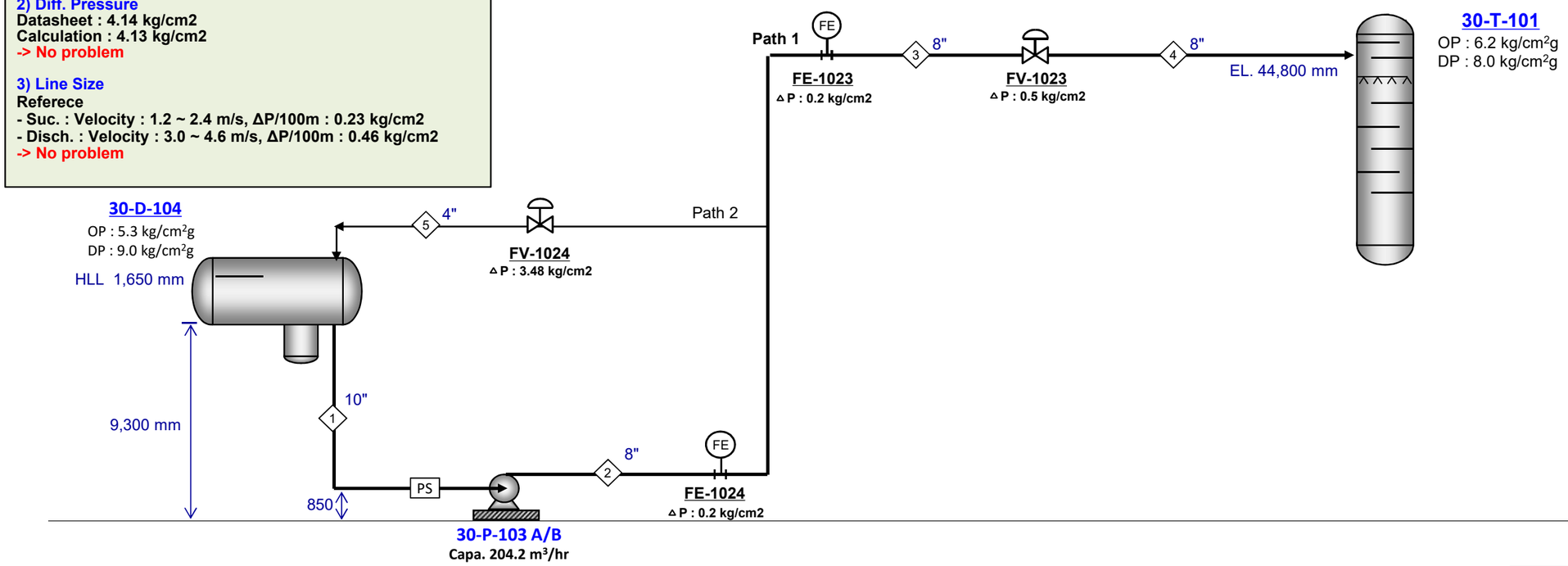

NOTE : 1. Assumed Data as below.
- Permanent Strainer △P = 0.07 kg/cm2
- Flow Element △P = 0.2 kg/cm2

PUMP CALCULATION		
ITEM NUMBER	`30-P-103A/B	
SUCTION	30-D-104	
Flow Rate	204.2	m3/hr
Operating Pres.	5.3	kg/cm².G
Design Pres.	9	kg/cm².G
Min. Static Head	9.3	meter
Max. Static Head	11.0	meter
Pump Shaft Level	0.85	meter
Vapor Pres.	6.33	kg/cm².A
Allowance	0	meter
Pipe Friction Loss	0.014	kg/cm²
Strainer	0.07	kg/cm²
Others		kg/cm²
Net Suction Pres.	5.73	kg/cm².G
Max. Suction Pres.	9.62	kg/cm².G
NPSH Available	7.08	meter
DISCHARGE	30-T-101	
Operating Pres.	6.2	kg/cm².G
Max. Static Head	44.8	meter
Pipe friction Loss	0.074	kg/cm².G
Pipe Gravity Loss	2.695	kg/cm³.G
Equip. Pres. Drop	0.4	kg/cm².G
Control Valves	0.5	kg/cm².G
Others		kg/cm².G
Disch. Press. Req'd	9.87	kg/cm².G
Diff. Pres.	4.13	kg/cm²
Diff. Head (Net)	67	meter
Hydr. Horsepower	23.0	KW
Est. Efficieny		%
Est. BHP		KW
Est. Shut-off Pres.	14.79	kg/cm².G
C.V dp / Friction	105.58	%

CV Input Data		
Item No.		
Des. Cap.		
Density		
D.P		
Char.		

CONTROL VALVES			
ITEM NO.	CAL. CV	RTD CV	% OPEN

		SUCTION			DISCHARGE																	
STREAM ID	UNIT	1			2	FE-1024	FE-1023	3	FV-1023	4												
Design Case																						
Phase		LIQUID			LIQUID			LIQUID		LIQUID												
Vapor Fraction																						
Normal Flow Rate	kg/hr	96,305			96,305			96,305		96,305												
Over Design	%	30			30			30		30												
Rated Flow Rate	kg/hr	125,197			125,197			125,197		125,197												
Temperature	°C	43.0			43.0			43.0		43.0												
Pressure @Inlet	kg/cm²G	5.30			9.87	9.86	9.66	9.46	9.46	8.96												
Pressure @Destination	kg/cm²G	5.73			9.86	9.66	9.46	9.46	8.96	6.20												
Line Size	inch	10			8			8		8												
Equivalent Length	M	63.1			8.0			8.0		87.9												
Elevation Change	M	-8.5			0.0			0.0		44.0												
Fluid, Density	kg/m³	613.1			613.1			613.1		613.1												
Fluid, Viscosity	cP	0.19			0.19			0.19		0.19												
Velocity	m/sec	1.11			1.76			1.76		1.76												
Pres. Drop by Friction	kg/cm²	0.014			0.006	0.000	0.000	0.006	0.000	0.062												
Pres. Drop by Gravity	kg/cm²	-0.518			0.000	0.000	0.000	0.000	0.000	2.695												
Pressure Drop / 100 M	kg/cm²	0.022			0.071			0.071		0.071												
Equipment Pres. Drop	kg/cm²	0.07				0.20	0.20															
CV PRESSURE DROP	kg/cm²								0.5													

LOTTE E&C 롯데건설주식회사	JOB NO.		PREPD BY: J.H.Kim	DATE: Sep. 26 '22	PAGE: 2/2	0
	SERVICE	DEPENTANIZER REFLUX PUMP (PATH2)	CHKD BY: J.H.Myung	APPD BY: J.Y.Kim		

*** Result**

1) NPSHA
Datasheet : 7.08 m
Calculation : 7.27 m
-> No problem

2) Diff. Pressure
Datasheet : 4.14 kg/cm2
Calculation : 4.13 kg/cm2
-> No problem

3) Line Size
Referece
- Suc. : Velocity : 1.2 ~ 2.4 m/s, ΔP/100m : 0.23 kg/cm2
- Disch. : Velocity : 3.0 ~ 4.6 m/s, ΔP/100m : 0.46 kg/cm2

-> No problem

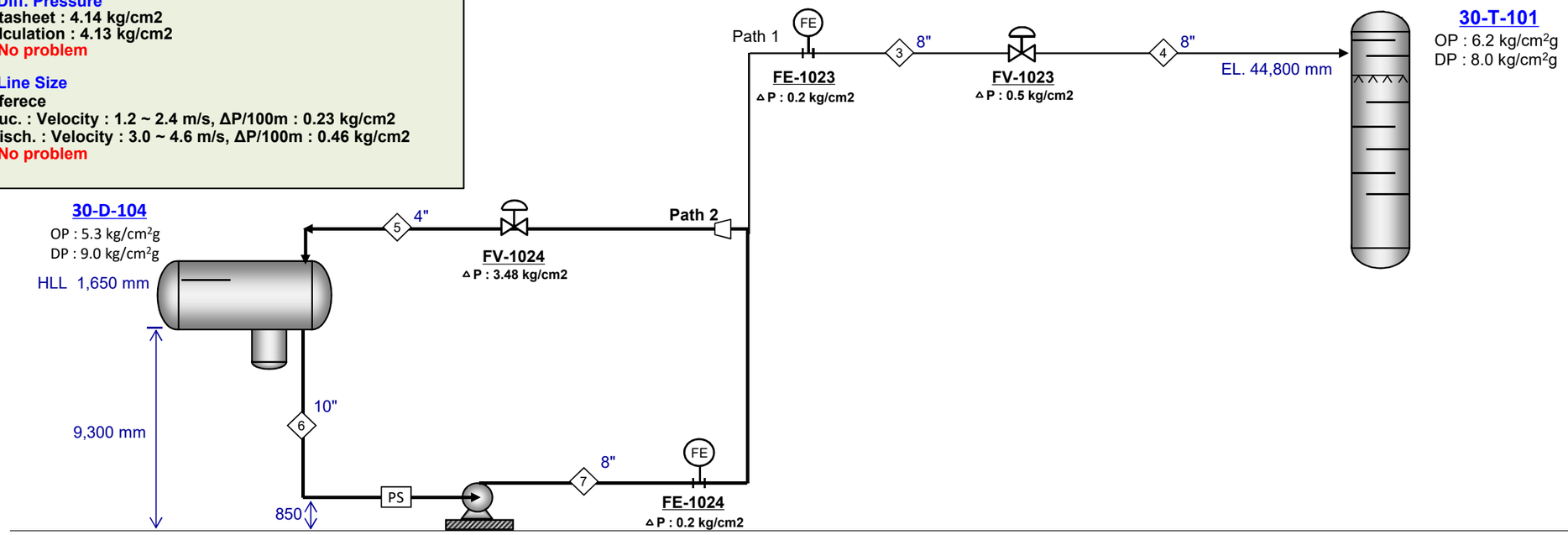

NOTE : 1. Assumed Data as below.
- Permanent Strainer △P = 0.07 kg/cm2
- Flow Element △P = 0.2 kg/cm2

PUMP CALCULATION		
ITEM NUMBER	`30-P-103A/B	
SUCTION	30-D-104	
Flow Rate	204.2	m3/hr
Operating Pres.	5.3	kg/cm².G
Design Pres.	9	kg/cm².G
Min. Static Head	9.3	meter
Max. Static Head	11.0	meter
Pump Shaft Level	0.85	meter
Vapor Pres.	6.33	kg/cm².A
Allowance	0	meter
Pipe Friction Loss	0.002	kg/cm²
Strainer	0.07	kg/cm²
Others		kg/cm²
Net Suction Pres.	5.75	kg/cm².G
Max. Suction Pres.	9.62	kg/cm².G
NPSH Available	7.27	meter
DISCHARGE	30-T-101	
Operating Pres.	5.3	kg/cm².G
Max. Static Head	11.4	meter
Pipe friction Loss	0.253	kg/cm².G
Pipe Gravity Loss	0.647	kg/cm³.G
Equip. Pres. Drop	0.2	kg/cm².G
Control Valves	3.5	kg/cm².G
Others		kg/cm².G
Disch. Press. Req'd	9.88	kg/cm².G
Diff. Pres.	4.13	kg/cm²
Diff. Head (Net)	67	meter
Hydr. Horsepower	8.8	KW
Est. Efficieny		%
Est. BHP		KW
Est. Shut-off Pres.	14.79	kg/cm².G
C.V dp / Friction	767.64	%

CV Input Data		
Item No.		
Des. Cap.		
Density		
D.P		
Char.		

CONTROL VALVES			
ITEM NO.	CAL. CV	RTD CV	% OPEN

		SUCTION			DISCHARGE																	
STREAM ID	UNIT	6			7	FE-1024	FV-1024	5														
Design Case																						
Phase		LIQUID			LIQUID			LIQUID														
Vapor Fraction																						
Normal Flow Rate	kg/hr	48,159			48,159			48,159														
Over Design	%	0			0			0														
Rated Flow Rate	kg/hr	48,159			48,159			48,159														
Temperature	°C	43.0			43.0			43.0														
Pressure @Inlet	kg/cm²G	5.30			9.88	9.88	9.68	6.20														
Pressure @Destination	kg/cm²G	5.75			9.88	9.68	6.20	5.30														
Line Size	inch	10			8			4														
Equivalent Length	M	63.1			8.0			69.1														
Elevation Change	M	-8.5			0.0			10.6														
Fluid, Density	kg/m³	613.1			613.1			613.1														
Fluid, Viscosity	cP	0.19			0.19			0.19														
Velocity	m/sec	0.43			0.68			2.66														
Pres. Drop by Friction	kg/cm²	0.002			0.001	0.000	0.000	0.252														
Pres. Drop by Gravity	kg/cm²	-0.518			0.000	0.000	0.000	0.647														
Pressure Drop / 100 M	kg/cm²	0.004			0.011			0.365														
Equipment Pres. Drop	kg/cm²	0.07				0.20																
CV PRESSURE DROP	kg/cm²						3.48															

LINE IDENTIFICATION		1	2	3	4	5	6	7	8	9	10	11	12	13	14	15	16	17
SIMU. STREAM ID																		
SERVICE						PUMP MIN. FLOW												
TYPE OF FLOW	(L/V/2PH)	LIQUID	LIQUID	LIQUID	LIQUID	LIQUID	LIQUID	LIQUID										
OPERATING CONDITION																		
Temperature	C	43	43	43	43	43	43	43										
Pressure @up	Kg/cm2.G																	
Pressure @down	Kg/cm2.G	0.50	-0.01	-0.01	-2.76	-0.90	0.52	0.00										
PIPING INFORMATION																		
Nominal Size	inch	10.0	8.0	8.0	8.0	4.0	10.0	8.0										
Schedule or Class	-	40	40	40	40	40	40	40										
Line length,straight	m	47.5	5.0	5.0	55.0	47.5	47.5	5.0										
Eqivalent Length Over Design Factor	-	0.25	0.50	0.50	0.50	0.50	0.25	0.50										
Net Elevation Change	m	(8.5)	0.0	0.0	44.0	10.6	(8.5)	0.0										
Equivalent Length	m	63.1	8.0	8.0	87.9	69.1	63.1	8.0										
Pipe inside Dia.	m	0.255	0.203	0.203	0.203	0.102	0.255	0.203										
Wall Roughness	mm	0.046	0.046	0.046	0.046	0.046	0.046	0.046										
LIQUID PHASE CALCULATION																		
Flow Rate	Kg/h	96,305	96,305	96,305	96,305	48,159	48,159	48,159										
Flow Rate Design Margin	%	30	30	30	30	0	0	0										
Density @PT	Kg/m3	613.1	613.1	613.1	613.1	613.1	613.1	613.1										
Viscosity @PT	cP	0.190	0.190	0.190	0.190	0.190	0.190	0.190										
Surface Tension	dyn/cm																	
Flow Rate, rated	kg/h	125,197	125,197	125,197	125,197	48,159	48,159	48,159										
Vol. Flow	m3/hr	204.2	204.2	204.2	204.2	78.6	78.6	78.6										
Velocity	m/s	1.11	1.76	1.76	1.76	2.66	0.43	0.68										
Reynolds No	-	9.16E+05	1.15E+06	1.15E+06	1.15E+06	8.77E+05	3.52E+05	4.42E+05										
Friction Factor	-	0.0145	0.0149	0.0149	0.0149	0.0169	0.0158	0.0158										
Press. @Out	Kg/cm2.G	0.504	-0.006	-0.006	-2.757	-0.899	0.516	-0.001										
Pressure Drop by Friction	Kg/cm2	0.0140	0.006	0.006	0.062	0.252	0.002	0.001										
Pressure Drop by Gravity	Kg/cm2	-0.518	0.000	0.000	2.695	0.647	-0.518	0.000										
Dp / 100 m (by friction)	Kg/cm2	0.0222	0.0708	0.0708	0.0708	0.3653	0.0036	0.0112										
VAPOR PHASE CALCULATION																		
Flow Rate,max op	Kg/h																	
Flow Rate Design Margin	%																	
Density @PT	Kg/m3																	
or MW	(-)																	
Compr. Z	(-)																	
Viscosity @PT	cP																	
Flow Rate,rated	Kg/h																	
Vol. Flow @in	m3/sec																	
Gas Density @in	Kg/m3																	
Velocity @in	m/s																	
Reynolds No	-																	
Friction Factor	-																	
Gas Dns @Out	Kg/m3																	
Velocity @Out	m/s																	
Mach no. @Out	-																	
Press. @Out	Kg/cm2.G																	
Pressure Drop by Friction	Kg/cm2																	
Pressure Drop by Gravity	Kg/cm2																	
Dp / 100 m (by friction)	Kg/cm2																	

30-P-104A/B

LOTTE E&C 롯데건설주식회사	JOB NO.		PREPD BY: J.H.Kim	DATE: Sep. 26 '22	PAGE: 1/2	0
	SERVICE	DEOCTANIZER REFLUX PUMP (PATH1)	CHKD BY: J.H.Myung	APPD BY: J.Y.Kim		

*** Result**

1) NPSHA

Datasheet : 5.99 m

Calculation : 9.29 m

-> No problem

1) Diff. Pressure

Datasheet : 4.17 kg/cm2

Calculation : 4.17 kg/cm2

-> No problem

2) Line Size

Referece

- Suc. : Velocity : 1.2 ~ 2.4 m/s, ΔP/100m : 0.23 kg/cm2

- Disch. : Velocity : 1.8 ~ 2.4 m/s, ΔP/100m : 0.92 kg/cm2

-> No problem

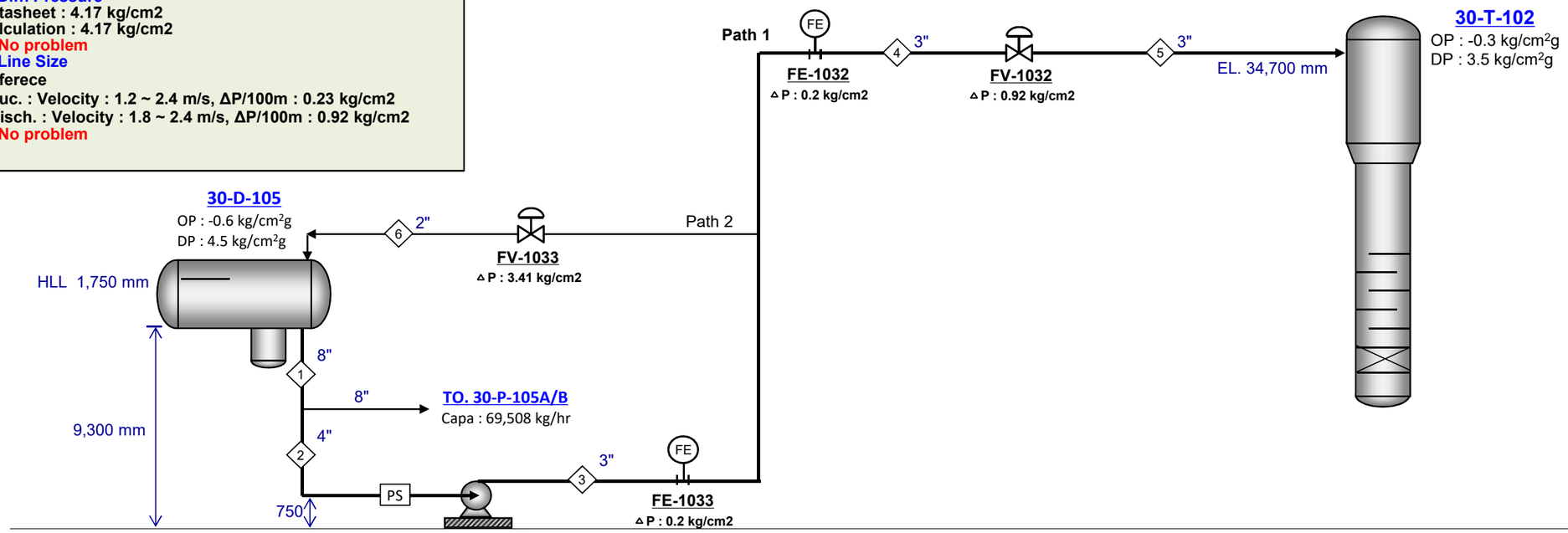

NOTE : 1. Assumed Data as below.
- Permanent Strainer △P = 0.07 kg/cm2, Flow Element △P = 0.2 kg/cm2
- Pump Shaft Level = 0.75 m
- Elevation of 30-D-105 is followed on plot plan base
(Plot Plan : 9.3 m, P&ID : 9.3 m)

CV Input Data		
Item No.		
Des. Cap.		
Density		
D.P		
Char.		

PUMP CALCULATION		
ITEM NUMBER	`30-P-104A/B	
SUCTION		
Flow Rate	20.9	m3/hr
Operating Pres.	-0.6	kg/cm².G
Design Pres.	4.5	kg/cm².G
Min. Static Head	9.3	meter
Max. Static Head	11.1	meter
Pump Shaft Level	0.75	meter
Vapor Pres.	0.289	kg/cm².A
Allowance	0	meter
Pipe Friction Loss	0.013	kg/cm²
Strainer	0.07	kg/cm²
Others		kg/cm²
Net Suction Pres.	0.02	kg/cm².G
Max. Suction Pres.	5.35	kg/cm².G
NPSH Available	9.29	meter
DISCHARGE		
Operating Pres.	-0.3	kg/cm².G
Max. Static Head	34.7	meter
Pipe friction Loss	0.111	kg/cm².G
Pipe Gravity Loss	2.790	kg/cm³.G
Equip. Pres. Drop	0.4	kg/cm².G
Control Valves	0.9	kg/cm².G
Others	0.27	kg/cm².G
Disch. Press. Req'd	4.19	kg/cm².G
Diff. Pres.	4.17	kg/cm²
Diff. Head (Net)	51	meter
Hydr. Horsepower	2.4	KW
Est. Efficieny		%
Est. BHP		KW
Est. Shut-off Pres.	10.56	kg/cm².G
C.V dp / Friction	117.86	%

CONTROL VALVES			
ITEM NO.	CAL. CV	RTD CV	% OPEN

		SUCTION			DISCHARGE																	
STREAM ID	UNIT	1	2		3	FE-1033	FE-1032	4	FV-1032	5												
Design Case																						
Phase		LIQUID	LIQUID		LIQUID			LIQUID		LIQUID												
Vapor Fraction																						
Normal Flow Rate	kg/hr	72,221	14,298		14,298			14,298		14,298												
Over Design	%	20	20		20			20		20												
Rated Flow Rate	kg/hr	86,665	17,157		17,157			17,157		17,157												
Temperature	°C	45.0	45.0		45.0			45.0		45.0												
Pressure @Inlet	kg/cm²G	-0.60	-0.60		4.19	4.18	3.98	3.78	3.78	2.86												
Pressure @Destination	kg/cm²G	-0.60	-0.25		4.18	3.98	3.78	3.78	2.86	-0.03												
Line Size	inch	8	4		3			3		3												
Equivalent Length	M	6.5	29.1		7.0			2.8		63.3												
Elevation Change	M	0.0	-5.3		0.0			0.0		34.0												
Fluid, Density	kg/m³	821.7	821.7		821.7			821.7		821.7												
Fluid, Viscosity	cP	0.33	0.33		0.33			0.33		0.33												
Velocity	m/sec	0.91	0.71		1.22			1.22		1.22												
Pres. Drop by Friction	kg/cm²	0.002	0.011		0.011	0.000	0.000	0.004	0.000	0.096												
Pres. Drop by Gravity	kg/cm²	0.000	-0.431		0.000	0.000	0.000	0.000	0.000	2.790												
Pressure Drop / 100 M	kg/cm²	0.027	0.038		0.151			0.151		0.151												
Equipment Pres. Drop	kg/cm²		0.07			0.20	0.20															
CV PRESSURE DROP	kg/cm²								0.92													

LOTTE E&C 롯데건설주식회사	JOB NO.		PREPD BY: J.H.Kim	DATE: Sep. 26 '22	PAGE: 2/2	0
	SERVICE	DEOCTANIZER REFLUX PUMP (PATH2)	CHKD BY: J.H.Myung	APPD BY: J.Y.Kim		

*** Result**

1) NPSHA

Datasheet : 5.99 m

Calculation : 9.44 m

-> No problem

1) Diff. Pressure

Datasheet : 4.17 kg/cm2

Calculation : 4.17 kg/cm2

-> No problem

2) Line Size

Referece

- Suc. : Velocity : 1.2 ~ 2.4 m/s, ΔP/100m : 0.23 kg/cm2

- Disch. : Velocity : 1.8 ~ 2.4 m/s, ΔP/100m : 0.92 kg/cm2

-> No problem

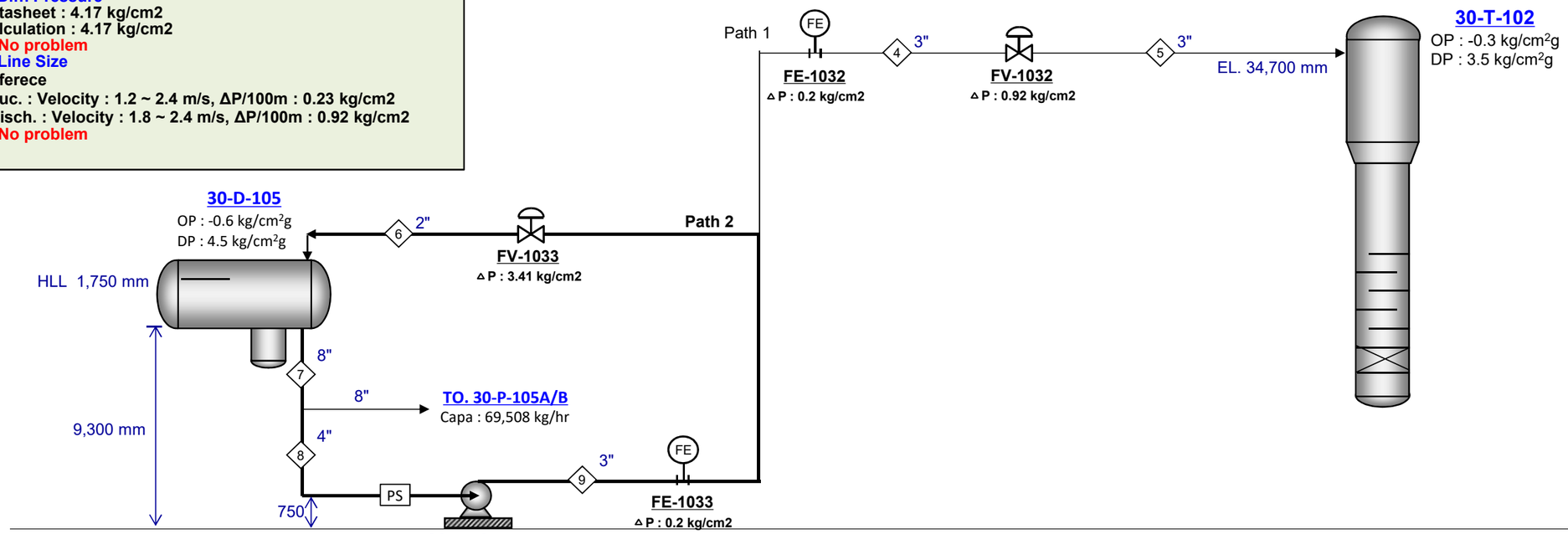

NOTE : 1. Assumed Data as below.
- Permanent Strainer △P = 0.07 kg/cm2, Flow Element △P = 0.2 kg/cm2
- Pump Shaft Level = 0.75 m
- Elevation of 30-D-105 is followed on plot plan base
(Plot Plan : 9.3 m, P&ID : 9.3 m)

CV Input Data		
Item No.		
Des. Cap.		
Density		
D.P		
Char.		

PUMP CALCULATION

ITEM NUMBER	`30-P-104A/B	
SUCTION		
Flow Rate	20.9	m3/hr
Operating Pres.	-0.6	kg/cm².G
Design Pres.	4.5	kg/cm².G
Min. Static Head	9.3	meter
Max. Static Head	11.1	meter
Pump Shaft Level	0.75	meter
Vapor Pres.	0.289	kg/cm².A
Allowance	0	meter
Pipe Friction Loss	0.001	kg/cm²
Strainer	0.07	kg/cm²
Others		kg/cm²
Net Suction Pres.	0.03	kg/cm².G
Max. Suction Pres.	5.35	kg/cm².G
NPSH Available	9.44	meter
DISCHARGE		
Operating Pres.	-0.6	kg/cm².G
Max. Static Head	11.5	meter
Pipe friction Loss	0.036	kg/cm².G
Pipe Gravity Loss	0.883	kg/cm³.G
Equip. Pres. Drop	0.2	kg/cm².G
Control Valves	3.4	kg/cm².G
Others	0.27	kg/cm².G
Disch. Press. Req'd	4.20	kg/cm².G
Diff. Pres.	4.17	kg/cm²
Diff. Head (Net)	51	meter
Hydr. Horsepower	0.7	KW
Est. Efficieny		%
Est. BHP		KW
Est. Shut-off Pres.	10.56	kg/cm².G
C.V dp / Friction	674.19	%

CONTROL VALVES

ITEM NO.	CAL. CV	RTD CV	% OPEN

		SUCTION			DISCHARGE																		
STREAM ID	UNIT	7	8		9	FE-1033	FV-1033	6															
Design Case																							
Phase		LIQUID	LIQUID		LIQUID			LIQUID															
Vapor Fraction																							
Normal Flow Rate	kg/hr	4,930	4,930		4,930			4,930															
Over Design	%	0	0		0			0															
Rated Flow Rate	kg/hr	4,930	4,930		4,930			4,930															
Temperature	°C	45.0	45.0		45.0			45.0															
Pressure @Inlet	kg/cm²G	-0.60	-0.60		4.20	4.20	4.00	0.59															
Pressure @Destination	kg/cm²G	-0.60	-0.24		4.20	4.00	0.59	-0.33															
Line Size	inch	8	4		3			2															
Equivalent Length	M	6.5	29.1		7.0			33.8															
Elevation Change	M	0.0	-5.3		0.0			10.8															
Fluid, Density	kg/m³	821.7	821.7		821.7			821.7															
Fluid, Viscosity	cP	0.33	0.33		0.33			0.33															
Velocity	m/sec	0.05	0.20		0.35			0.77															
Pres. Drop by Friction	kg/cm²	0.000	0.001		0.001	0.000	0.000	0.035															
Pres. Drop by Gravity	kg/cm²	0.000	-0.431		0.000	0.000	0.000	0.883															
Pressure Drop / 100 M	kg/cm²	0.000	0.004		0.014			0.103															
Equipment Pres. Drop	kg/cm²		0.07			0.20																	
CV PRESSURE DROP	kg/cm²						3.41																

LINE IDENTIFICATION		1	2	3	4	5	6	7	8	9	10	11	12	13	14	15	16	17
SIMU. STREAM ID																		
SERVICE				PUMP D/S			PUMP MIN. FLOW											
TYPE OF FLOW	(L/V/2PH)	LIQUID	LIQUID	LIQUID	LIQUID	LIQUID	LIQUID	LIQUID	LIQUID	LIQUID								
OPERATING CONDITION																		
Temperature	C	45	45	45	45	45	45	45	45	45								
Pressure @up	Kg/cm2.G																	
Pressure @down	Kg/cm2.G	0.00	0.42	-0.01	0.00	-2.89	-0.92	0.00	0.43	0.00								
PIPING INFORMATION																		
Nominal Size	inch	8.0	4.0	3.0	3.0	3.0	2.0	8.0	4.0	3.0								
Schedule or Class	-	40	40	40	40	40	40	40	40	40								
Line length,straight	m	5.0	20.0	5.0	2.0	45.0	25.0	5.0	20.0	5.0								
Eqivalent Length Over Design Factor	-	0.25	0.50	0.50	0.50	0.50	0.50	0.25	0.50	0.50								
Net Elevation Change	m	0.0	(5.3)	0.0	0.0	34.0	10.8	0.0	(5.3)	0.0								
Equivalent Length	m	6.5	29.1	7.0	2.8	63.3	33.8	6.5	29.1	7.0								
Pipe inside Dia.	m	0.203	0.102	0.078	0.078	0.078	0.053	0.203	0.102	0.078								
Wall Roughness	mm	0.046	0.046	0.046	0.046	0.046	0.046	0.046	0.046	0.046								
LIQUID PHASE CALCULATION																		
Flow Rate	Kg/h	72,221	14,298	14,298	14,298	14,298	4,930	4,930	4,930	4,930								
Flow Rate Design Margin	%	20	20	20	20	20	0	0	0	0								
Density @PT	Kg/m3	821.7	821.7	821.7	821.7	821.7	821.7	821.7	821.7	821.7								
Viscosity @PT	cP	0.330	0.330	0.330	0.330	0.330	0.330	0.330	0.330	0.330								
Surface Tension	dyn/cm																	
Flow Rate, rated	kg/h	86,665	17,157	17,157	17,157	17,157	4,930	4,930	4,930	4,930								
Vol. Flow	m3/hr	105.47	20.9	20.9	20.9	20.9	6.0	6.0	6.0	6.0								
Velocity	m/s	0.91	0.71	1.22	1.22	1.22	0.77	0.05	0.20	0.35								
Reynolds No	-	4.58E+05	1.80E+05	2.36E+05	2.36E+05	2.36E+05	1.01E+05	2.61E+04	5.17E+04	6.78E+04								
Friction Factor	-	0.0158	0.0188	0.0190	0.0190	0.0190	0.0217	0.0248	0.0223	0.0218								
Press. @Out	Kg/cm2.G	-0.002	0.420	-0.011	-0.004	-2.885	-0.918	0.000	0.430	-0.001								
Pressure Drop by Friction	Kg/cm2	0.0017	0.011	0.011	0.004	0.096	0.035	0.000	0.001	0.001								
Pressure Drop by Gravity	Kg/cm2	0.000	-0.431	0.000	0.000	2.790	0.883	0.000	-0.431	0.000								
Dp / 100 m (by friction)	Kg/cm2	0.0269	0.0383	0.1512	0.1512	0.1512	0.1028	0.0001	0.0038	0.0143								
VAPOR PHASE CALCULATION																		
Flow Rate,max op	Kg/h																	
Flow Rate Design Margin	%																	
Density @PT	Kg/m3																	
or MW	(-)																	
Compr. Z	(-)																	
Viscosity @PT	cP																	
Flow Rate,rated	Kg/h																	
Vol. Flow @in	m3/sec																	
Gas Density @in	Kg/m3																	
Velocity @in	m/s																	
Reynolds No	-																	
Friction Factor	-																	
Gas Dns @Out	Kg/m3																	
Velocity @Out	m/s																	
Mach no. @Out	-																	
Press. @Out	Kg/cm2.G																	
Pressure Drop by Friction	Kg/cm2																	
Pressure Drop by Gravity	Kg/cm2																	
Dp / 100 m (by friction)	Kg/cm2																	

30-P-105A/B

LOTTE E&C 롯데건설주식회사

JOB NO.		PREPD BY:	J.H.Kim	DATE:	Sep. 26 '22	PAGE:	1/2	0
SERVICE	GHU-II FEED PUMP (PATH1)	CHKD BY:	J.H.Myung	APPD BY:	J.Y.Kim			

*** Result**

1) NPSHA
Datasheet : 7.58 m
Calculation : 7.58 m
-> No Problem

2) Diff. Pressure
Datasheet : 34.19 kg/cm2
Calculation : 34.18 kg/cm2
-> No Problem

3) Line Size
Referece
- Suc. : Velocity : 1.2 ~ 2.4 m/s, ΔP/100m : 0.23 kg/cm2
- Disch. : Velocity : 2.4 ~ 3.0 m/s, ΔP/100m : 0.92 kg/cm2

-> No Problem

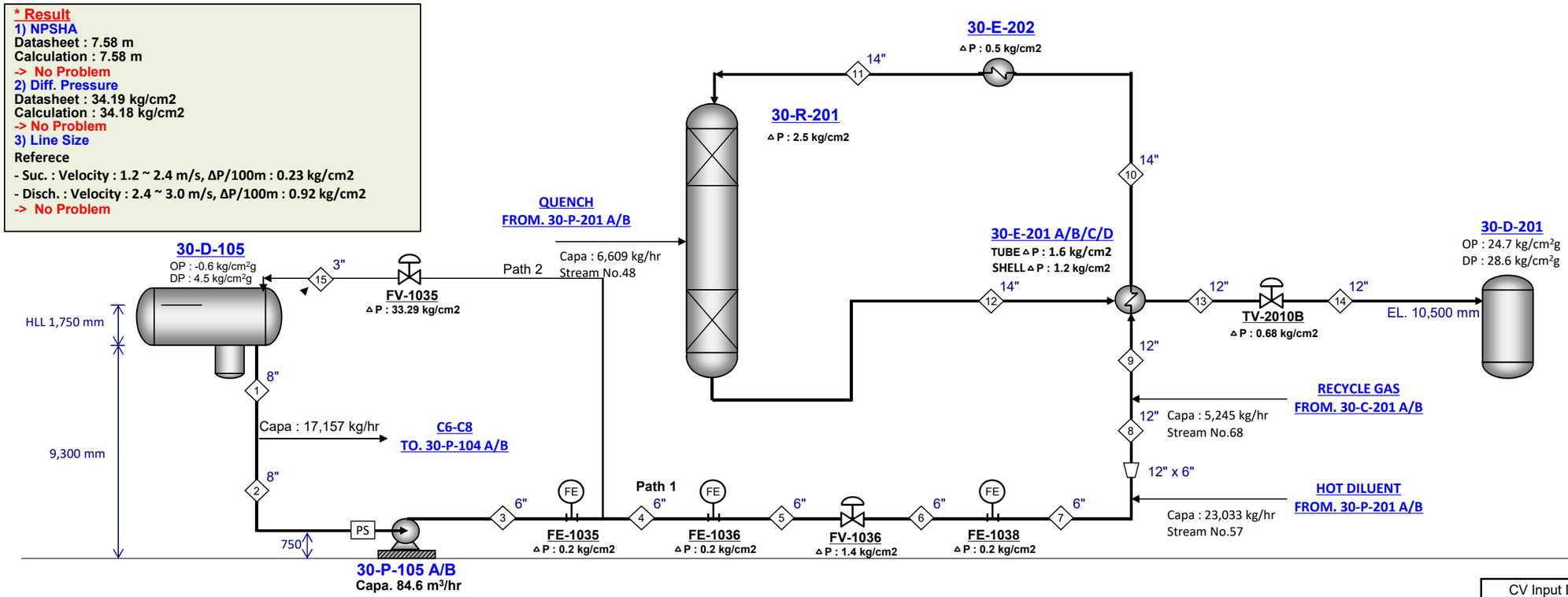

NOTE : 1. Assumed Data as below.
- Permanent Strainer △P = 0.07 kg/cm2, Flow Element △P = 0.2 kg/cm2
- Pump Shaft Level = 0.75 m

CV Input Data		
Item No.		
Des. Cap.		
Density		
D.P		
Char.		

PUMP CALCULATION

ITEM NUMBER	30-P-105A/B	
SUCTION		
Flow Rate	84.6	m3/hr
Operating Pres.	-0.6	kg/cm².G
Design Pres.	4.5	kg/cm².G
Min. Static Head	9.3	meter
Max. Static Head	11.05	meter
Pump Shaft Level	0.75	meter
Vapor Pres.	0.433	kg/cm².A
Allowance	0	meter
Pipe Friction Loss	0.010	kg/cm²
Strainer	0.07	kg/cm²
Others		kg/cm²
Net Suction Pres.	0.02	kg/cm².G
Max. Suction Pres.	5.35	kg/cm².G
NPSH Available	7.58	meter
DISCHARGE		
Operating Pres.	24.7	kg/cm².G
Max. Static Head	10.5	meter
Pipe friction Loss	0.226	kg/cm².G
Pipe Gravity Loss	0.801	kg/cm³.G
Equip. Pres. Drop	6.4	kg/cm².G
Control Valves	2.1	kg/cm².G
Others		kg/cm².G
Disch. Press. Req'd	34.21	kg/cm².G
Diff. Pres.	34.18	kg/cm²
Diff. Head (Net)	416	meter
Hydr. Horsepower	78.7	KW
Est. Efficieny		%
Est. BHP		KW
Est. Shut-off Pres.	48.08	kg/cm².G
C.V dp / Friction	31.39	%

CONTROL VALVES

ITEM NO.	CAL. CV	RTD CV	% OPEN

		SUCTION			DISCHARGE																				
STREAM ID	UNIT	1	2		3	FE-1035	4	FE-1036	5	FV-1036	6	FE-1038	7	8	9	E-201A~D	10	E-202	11	R-201	12	E-201A~D	13	14	
Design Case																									
Phase		LIQUID	LIQUID		LIQUID		LIQUID		LIQUID		LIQUID		LIQUID	LIQUID	2PH		VAPOR		VAPOR		VAPOR		2PH	2PH	
Vapor Fraction															0.058		1.000		1.0		1.0		0.2	0.2	
Normal Flow Rate	kg/hr	78,786	63,189		63,189		63,189		63,189		63,189		63,189	84,128	89,117		89,117		89,117		95,125		95,125	95,125	
Over Design	%	10	10		10		10		10		10		10	10	10		10		10		10		10	10	
Rated Flow Rate	kg/hr	86,665	69,508		69,508		69,508		69,508		69,508		69,508	92,541	98,029		98,029		98,029		104,638		104,638	104,638	
Temperature	°C	45.0	45.0		45.0		45.0		45.0		45.0		45.0	69.0	69.0		281.0		310.0		350.0		137.0	137.0	
Pressure @Inlet	kg/cm²G	-0.60	-0.60		34.21	34.20	34.00	34.00	33.80	33.79	32.39	32.39	32.19	31.38	31.38	31.34	29.74	29.72	29.22	29.19	26.69	26.65	25.45	24.76	
Pressure @Destination	kg/cm²G	-0.60	0.02		34.20	34.00	34.00	33.80	33.79	32.39	32.39	32.19	31.38	31.38	31.34	29.74	29.72	29.22	29.19	26.69	26.65	25.45	24.76	24.70	
Line Size	inch	8	8		6		6		6		6		6	12	12		14		14		14		12	12	
Equivalent Length	M	6.5	45.5		7.7		7.7		7.7		7.7		8	9	85		35		35		44		9	68	
Elevation Change	M	0.0	-8.6		0.0		0.0		0.0		0.0		10	0	0		0		0		0		0	0	
Fluid, Density	kg/m³	821.7	821.7		821.7		821.7		821.7		821.7		821.7	800.2	189.3		27.0		25.0		23.2		142.7	140.3	
Fluid, Viscosity	cP	0.33	0.33		0.33		0.33		0.33		0.33		0.33	0.28			0.02		0.02		0.02				
Velocity	m/sec	0.91	0.73		1.26		1.26		1.26		1.26		1.26	0.44			11.13		12.01		13.83				
Pres. Drop by Friction	kg/cm²	0.002	0.008		0.005	0.000	0.005	0.000	0.005	0.000	0.005	0.000	0.005	0.000	0.040	0.000	0.024	0.000	0.026	0.000	0.040	0.000	0.007	0.062	
Pres. Drop by Gravity	kg/cm²	0.000	-0.703		0.000	0.000	0.000	0.000	0.000	0.000	0.000	0.000	0.801	0.000	0.000	0.000	0.000	0.000	0.000	0.000	0.000	0.000	0.000	0.000	
Pressure Drop / 100 M	kg/cm²	0.027	0.018		0.070		0.070		0.070		0.070		0.070	0.004	0.046		0.068		0.074		0.092		0.088	0.090	
Equipment Pres. Drop	kg/cm²		0.07			0.20		0.20				0.20				1.60		0.50		2.50		1.20			
CV PRESSURE DROP	kg/cm²									1.40													0.68		

LOTTE E&C 롯데건설주식회사	JOB NO.		PREPD BY:	J.H.Kim	DATE:	Sep. 26 '22	PAGE:	2/2	0
	SERVICE	GHU-II FEED PUMP (PATH2)	CHKD BY:	J.H.Myung	APPD BY:	J.Y.Kim			

*** Result**

1) NPSHA
Datasheet : 7.58 m
Calculation : 7.68 m
-> No Problem

2) Diff. Pressure
Datasheet : 34.19 kg/cm2
Calculation : 34.19 kg/cm2
-> No Problem

3) Line Size
Referece
- Suc. : Velocity : 1.2 ~ 2.4 m/s, ΔP/100m : 0.23 kg/cm2
- Disch. : Velocity : 2.4 ~ 3.0 m/s, ΔP/100m : 0.92 kg/cm2

-> No Problem

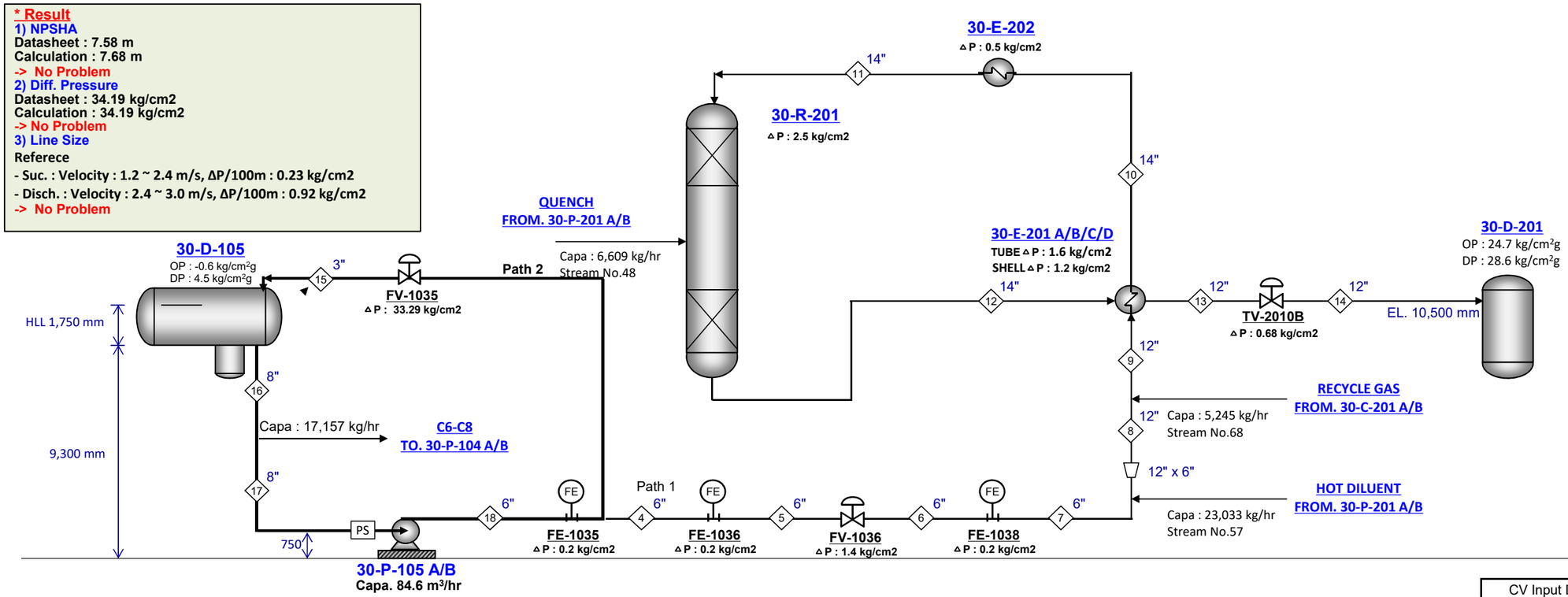

NOTE : 1. Assumed Data as below.
- Permanent Strainer △P = 0.07 kg/cm2, Flow Element △P = 0.2 kg/cm2
- Pump Shaft Level = 0.75 m

CV Input Data		
Item No.		
Des. Cap.		
Density		
D.P		
Char.		

PUMP CALCULATION

ITEM NUMBER	30-P-105A/B	
SUCTION		
Flow Rate	84.6	m3/hr
Operating Pres.	-0.6	kg/cm2.G
Design Pres.	4.5	kg/cm2.G
Min. Static Head	9.3	meter
Max. Static Head	11.05	meter
Pump Shaft Level	0.75	meter
Vapor Pres.	0.433	kg/cm2.A
Allowance	0	meter
Pipe Friction Loss	0.001	kg/cm2
Strainer	0.07	kg/cm2
Others		kg/cm2
Net Suction Pres.	0.03	kg/cm2.G
Max. Suction Pres.	5.35	kg/cm2.G
NPSH Available	7.68	meter
DISCHARGE		
Operating Pres.	-0.6	kg/cm2.G
Max. Static Head	11.5	meter
Pipe friction Loss	0.172	kg/cm2.G
Pipe Gravity Loss	0.883	kg/cm3.G
Equip. Pres. Drop	0.2	kg/cm2.G
Control Valves	33.3	kg/cm2.G
Others	0.28	kg/cm2.G
Disch. Press. Req'd	34.23	kg/cm2.G
Diff. Pres.	34.19	kg/cm2
Diff. Head (Net)	416	meter
Hydr. Horsepower	27.9	KW
Est. Efficieny		%
Est. BHP		KW
Est. Shut-off Pres.	48.09	kg/cm2.G
C.V dp / Friction	5102.84	%

CONTROL VALVES

ITEM NO.	CAL. CV	RTD CV	% OPEN

		SUCTION			DISCHARGE			
STREAM ID	UNIT	16	17		18	FE-1035	FV-1035	15
Design Case								
Phase		LIQUID	LIQUID		LIQUID			LIQUID
Vapor Fraction								
Normal Flow Rate	kg/hr	24,651	24,651		24,651			24,651
Over Design	%	0	0		0			0
Rated Flow Rate	kg/hr	24,651	24,651		24,651			24,651
Temperature	°C	45.0	45.0		45.0			45.0
Pressure @Inlet	kg/cm2G	-0.60	-0.60		34.23	34.22	34.02	0.73
Pressure @Destination	kg/cm2G	-0.60	0.03		34.22	34.02	0.73	-0.32
Line Size	inch	8	8		6			3
Equivalent Length	M	6.5	45.5		7.7			56.3
Elevation Change	M	0.0	-8.6		0.0			10.8
Fluid, Density	kg/m3	821.7	821.7		821.7			821.7
Fluid, Viscosity	cP	0.33	0.33		0.33			0.33
Velocity	m/sec	0.26	0.26		0.45			1.75
Pres. Drop by Friction	kg/cm2	0.000	0.001		0.001	0.000	0.000	0.172
Pres. Drop by Gravity	kg/cm2	0.000	-0.703		0.000	0.000	0.000	0.883
Pressure Drop / 100 M	kg/cm2	0.003	0.003		0.010			0.305
Equipment Pres. Drop	kg/cm2		0.07			0.20		
CV PRESSURE DROP	kg/cm2						33.29	

LINE IDENTIFICATION		1	2	3	4	5	6	7	8	9	10	11	12	13	14	15	16	17	18
SIMU. STREAM ID																			
SERVICE				Pump DS							E-711 A/B/C/D		R-702 A/B			PUMP MIN. FLOW			
TYPE OF FLOW	(L/V/2PH)	LIQUID	LIQUID	LIQUID	LIQUID	LIQUID	LIQUID	LIQUID	LIQUID	2PH	VAPOR	VAPOR	VAPOR	2PH	2PH	LIQUID	LIQUID	LIQUID	LIQUID
OPERATING CONDITION																			
Temperature	C	45	45	45	45	45	45	45	69	69	281	310	350	137	137	45	45	45	45
Pressure @up	Kg/cm2.G									31.51				25.58	24.89				
Pressure @down	Kg/cm2.G	0.00	0.69	-0.01	-0.01	-0.01	-0.01	-0.81	0.00	31.47	-0.02	-0.03	-0.04	25.57	24.83				
PIPING INFORMATION																			
Nominal Size	inch	8.0	8.0	6.0	6.0	6.0	6.0	6.0	12.0	12.0	14.0	14.0	14.0	12.0	12.0	3.0	8.0	8.0	6.0
Schedule or Class	-	40	40	40	40	40	40	40	40	40	20	20	20	40	40	40	40	40	40
Line length,straight	m	5.0	35.0	5.0	5.0	5.0	5.0	5.0	5.0	50.0	20.0	20.0	25.0	5.0	40	40.0	5.0	35.0	5.0
Eqivalent Length Over Design Factor	-	0.25	0.25	0.50	0.50	0.50	0.50	0.50	0.50	0.50	0.50	0.50	0.50	0.50	0.50	0.50	0.25	0.25	0.50
Net Elevation Change	m	0.0	(8.6)	0.0	0.0	0.0	0.0	9.8	0.0	0.0	0.0	0.0	0.0	0.0	0.0	10.8	0.0	(8.6)	0.0
Equivalent Length	m	6.5	45.5	7.7	7.7	7.7	7.7	7.7	8.5	85.5	35.1	35.1	43.9	8.5	68.4	56.3	6.5	45.5	7.7
Pipe inside Dia.	m	0.203	0.203	0.154	0.154	0.154	0.154	0.154	0.303	0.303	0.340	0.340	0.340	0.303	0.303	0.078	0.203	0.203	0.154
Wall Roughness	mm	0.046	0.046	0.046	0.046	0.046	0.046	0.046	0.046	0.046	0.046	0.046	0.046	0.046	0.046	0.046	0.046	0.046	0.046
LIQUID PHASE CALCULATION																			
Flow Rate	Kg/h	78,786	63,189	63,189	63,189	63,189	63,189	63,189	84,128	83,984				74,033	73,655	24,651	24,651	24,651	24,651
Flow Rate Design Margin	%	10	10	10	10	10	10	10	10	10				10	10				
Density @PT	Kg/m3	821.7	821.7	821.7	821.7	821.7	821.7	821.7	800.2	796.0				719.1	719.9	821.7	821.7	821.7	821.7
Viscosity @PT	cP	0.330	0.330	0.330	0.330	0.330	0.330	0.330	0.280	0.3				0.180	0.180	0.330	0.330	0.330	0.330
Surface Tension	dyn/cm									20.8				13.2	13.2				
Flow Rate, rated	kg/h	86,665	69,508	69,508	69,508	69,508	69,508	69,508	92,541	92,382				81,436	81,021	24,651	24,651	24,651	24,651
Vol. Flow	m3/hr	105.5	84.6	84.6	84.6	84.6	84.6	84.6	115.6	116.1				113.2	112.5	30.0	30.0	30.0	30.0
Velocity	m/s	0.91	0.73	1.26	1.26	1.26	1.26	1.26	0.44	0.45				0.44	0.43	1.75	0.26	0.26	0.45
Reynolds No	-	4.58E+05	3.67E+05	4.84E+05	4.84E+05	4.84E+05	4.84E+05	4.84E+05	3.85E+05	3.99E+05				5.28E+05	5.25E+05	3.39E+05	1.30E+05	1.30E+05	1.72E+05
Friction Factor	-	0.0158	0.0161	0.0163	0.0163	0.0163	0.0163	0.0163	0.0154	0.0153				0.0149	0.0149	0.0186	0.0183	0.0183	0.0180
Press. @Out	Kg/cm2.G	-0.002	0.695	-0.005	-0.005	-0.005	-0.005	-0.807	0.000	31.507				25.580	24.888	-1.055	0.000	0.701	-0.001
Pressure Drop by Friction	Kg/cm2	0.0017	0.008	0.005	0.005	0.005	0.005	0.005	0.000	0.003				0.000	0.002	0.172	0.000	0.001	0.001
Pressure Drop by Gravity	Kg/cm2	0.000	-0.703	0.000	0.000	0.000	0.000	0.801	0.000							0.883	0.000	-0.703	0.000
Dp / 100 m (by friction)	Kg/cm2	0.0269	0.0177	0.0705	0.0705	0.0705	0.0705	0.0705	0.0041							0.3046	0.0025	0.0025	0.0098
VAPOR PHASE CALCULATION																			
Flow Rate,max op	Kg/h									5,133	89,117	89,117	95,125	21,092	21,470				
Flow Rate Design Margin	%									10	10	10	10	10	10				
Density @PT	Kg/m3									4.62	27.0	25.0	23.19	12.18	12.00				
or MW	(-)																		
Compr. Z	(-)																		
Viscosity @PT	cP									0.011	0.019	0.019	0.020	0.016	0.016				
Flow Rate,rated	Kg/h									5,646	98,029	98,029	104,638	23,201	23,617				
Vol. Flow @in	m3/sec									0.34	1.01	1.09	1.25	0.53	0.55				
Gas Density @in	Kg/m3									4.62	26.98	25.01	23.19	12.18	12.00				
Velocity @in	m/s									4.70	11.13	12.01	13.83	7.33	7.57				
Reynolds No	-									5.99E+05	5.37E+06	5.37E+06	5.45E+06	1.69E+06	1.72E+06				
Friction Factor	-									0.0147	0.0130	0.0130	0.0130	0.0137	0.0137				
Gas Dns @Out	Kg/m3									4.624	26.354	24.382	22.281	12.179	11.995				
Velocity @Out	m/s									4.698	11.397	12.319	14.389	7.328	7.574				
Mach no. @Out	-									0.005	0.157	0.164	0.184	0.013	0.014				
Press. @Out	Kg/cm2.G									31.508	-0.024	-0.026	-0.040	25.579	24.879				
Pressure Drop by Friction	Kg/cm2									0.002	0.024	0.026	0.040	0.001	0.011				
Pressure Drop by Gravity	Kg/cm2										0.000	0.000	0.000						
Dp / 100 m (by friction)	Kg/cm2										0.0682	0.0738	0.0922						

LINE IDENTIFICATION		1	2	3	4	5	6	7	8	9	10	11	12	13	14	15	16	17	18
TWO-PHASE CALCULATION METHOD SELECTION										DuklerII				DuklerII	DuklerII				
TWO-PHASE CALCULATION (HTFS)																			
Vapor Flow rate @ outlet	Kg/hr									5,646				23,201	23,617				
Upward Angle	deg																		
C factor										18.131				13.546	13.630				
Liquid + Vapor density	Kg/m3									207.010				123.291	120.746				
Mach No.										0.024				0.034	0.035				
Slip Ratio										3.615				3.137	3.174				
Void Fraction										0.744				0.843	0.846				
Pressure Drop by Acceleration										0.000				0.000	0.000				
Pressure Drop by Friction	Kg/cm2									0.055				0.010	0.081				
Pres. Drop by Gravity	Kg/cm2									0.000				0.000	0.000				
TWO-PHASE CALCULATION (Homogeneous)																			
Bulk density	Kg/m3									66.65				47.14	45.72				
Bulk viscosity, centipoise	cP									0.033				0.025	0.025				
Velocity, m/sec	m/s									5.144				7.763	8.004				
Reynolds number	-									3.10E+06				4.40E+06	4.46E+06				
Friction factor	-									0.013				0.013	0.013				
Pressure Drop by Friction	Kg/cm2									0.034				0.005	0.045				
Pressure Drop by Gravity	Kg/cm2									0.000				0.000	0.000				
TWO-PHASE CALCULATION (Dukler)																			
In-place density	Kg/m3									189.30				142.72	140.33				
Reynolds number	-									1.43E+06				2.39E+06	2.41E+06				
Friction factor	-									0.014				0.014	0.014				
Pressure Drop by Friction	Kg/cm2									0.040				0.007	0.062				
Pressure Drop by Gravity	Kg/cm2									0.000				0.000	0.000				
Press. @Out	Kg/cm2.G									31.470				25.573	24.828				
Press. Drop	Kg/cm2									0.040				0.007	0.062				
FLOW REGIME FOR VERTICAL																			
Simpson	X-Axis(Xd)									0.002				0.003	0.003				
	Y-Axis(Fr)									0.208				0.558	0.572				
	Flow Regime									Intermit				Intermit	Intermit				
Griffith and Wallies	X-Axis									8.90				20.27	21.54				
	Y-Axis									0.91				0.94	0.95				
	Flow Regime									Slug				Annular Mist	Annular Mist				
Taitel and Dukler	Flow Regime									Annular				Annular	Annular				
(1) Bubble-Slug	X-Axis									37.18				63.53	65.65				
Annular trans	Y-Axis									0.10				0.06	0.06				
(2) Slug-Chum	X-Axis									2.98				4.50	4.64				
Transition	Y-Axis									0.91				0.94	0.95				
	2ph Re no.									4.60E+06				9.40E+06	9.71E+06				
(3) Annular-Churn	X-Axis									1.27				0.48	0.46				
Slug Trans.	Y-Axis									2.83				8.27	8.48				
FLOW REGIME FOR HORIZONTAL																			
Taitel and Dukler	X-Axis(Xp)									1.27				0.48	0.46				
	Y-Axis(Fr)									0.21				0.56	0.57				
	Y-Axis(Xt)									0.21				0.06	0.18				
	Y-Axis(Xk)									131.54				405.20	414.19				
	Flow Regime									Slug				Annular	Annular				
Baker	X-Axis									75.42				36.76	35.66				
	Y-Axis									9129				24318	24924				
	Flow Regime									Annular				Annular	Annular				

LOTTE E&C
롯데건설주식회사

JOB NO.		PREPD BY:	J.H.Kim	DATE:	Sep. 26 '22	PAGE:	1/1	0
SERVICE	GHU-II FEED PUMP (PATH1)	CHKD BY:	J.H.Myung	APPD BY:	J.Y.Kim			

*** Result**

1) NPSHA
Datasheet : 7.58 m
Calculation : 7.61 m
-> No Problem

2) Diff. Pressure
Datasheet : 34.19 kg/cm2
Calculation : 34.19 kg/cm2
-> No Problem

3) Line Size
Referece
- Suc. : Velocity : 1.2 ~ 2.4 m/s, ΔP/100m : 0.23 kg/cm2
- Disch. : Velocity : 2.4 ~ 3.0 m/s, ΔP/100m : 0.92 kg/cm2

-> No Problem

CASE B EOR

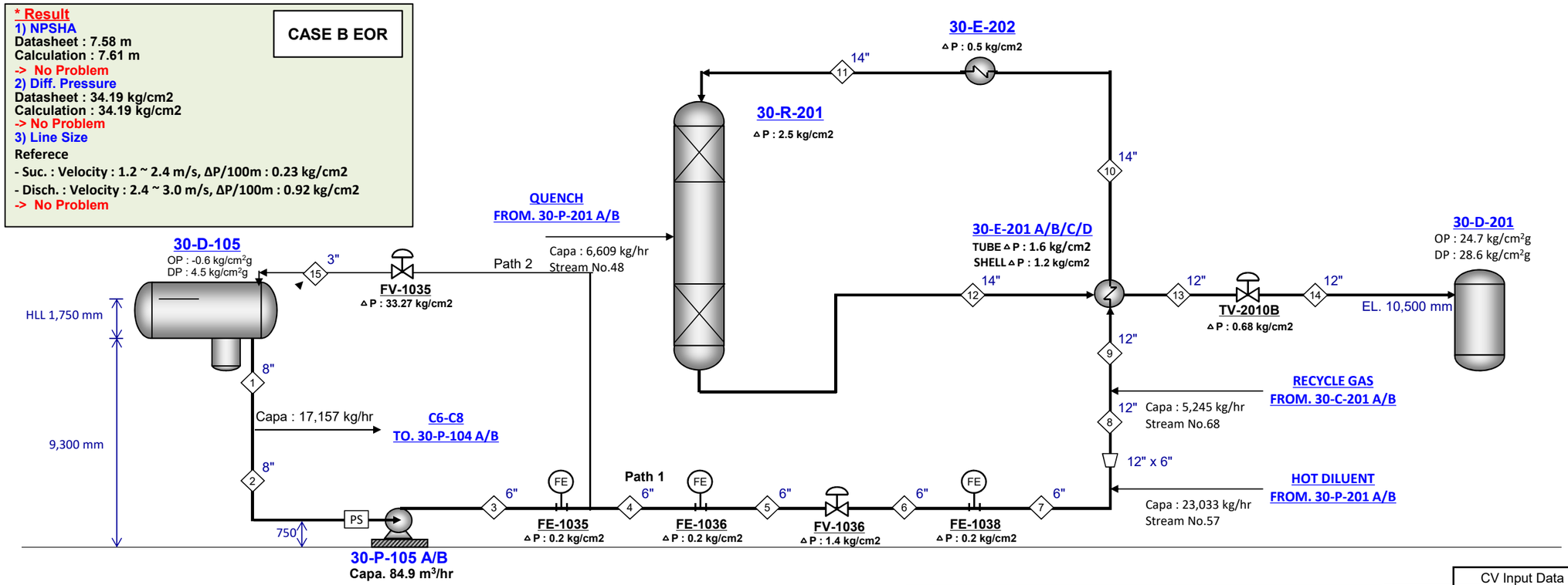

NOTE : 1. Assumed Data as below.
- Permanent Strainer △P = 0.07 kg/cm2, Flow Element △P = 0.2 kg/cm2
- Pump Shaft Level = 0.75 m

CV Input Data		
Item No.		
Des. Cap.		
Density		
D.P		
Char.		

PUMP CALCULATION

ITEM NUMBER	30-P-105A/B	
SUCTION		
Flow Rate	61.5	m3/hr
Operating Pres.	-0.6	kg/cm².G
Design Pres.	4.5	kg/cm².G
Min. Static Head	9.3	meter
Max. Static Head	11.05	meter
Pump Shaft Level	0.75	meter
Vapor Pres.	0.433	kg/cm².A
Allowance	0	meter
Pipe Friction Loss	0.005	kg/cm²
Strainer	0.07	kg/cm²
Others		kg/cm²
Net Suction Pres.	0.01	kg/cm².G
Max. Suction Pres.	5.33	kg/cm².G
NPSH Available	7.61	meter
DISCHARGE		
Operating Pres.	24.7	kg/cm².G
Max. Static Head	10.5	meter
Pipe friction Loss	0.239	kg/cm².G
Pipe Gravity Loss	0.783	kg/cm³.G
Equip. Pres. Drop	6.4	kg/cm².G
Control Valves	2.1	kg/cm².G
Others		kg/cm².G
Disch. Press. Req'd	34.20	kg/cm².G
Diff. Pres.	34.19	kg/cm²
Diff. Head (Net)	426	meter
Hydr. Horsepower	57.3	KW
Est. Efficieny		%
Est. BHP		KW
Est. Shut-off Pres.	48.07	kg/cm².G
C.V dp / Friction	31.33	%

CONTROL VALVES

ITEM NO.	CAL. CV	RTD CV	% OPEN

		SUCTION			DISCHARGE																				
STREAM ID	UNIT	1	2		3	FE-1035	4	FE-1036	5	FV-1036	6	FE-1038	7	8	9	E-201A~D	10	E-202	11	R-201	12	E-201A~D	13	14	
Design Case																									
Phase		LIQUID	LIQUID		LIQUID		LIQUID		LIQUID		LIQUID		LIQUID	LIQUID	2PH		VAPOR		VAPOR		VAPOR		2PH	2PH	
Vapor Fraction															0.081		1.000		1.0		1.0		0.3	0.3	
Normal Flow Rate	kg/hr	61,808	44,921		44,921		44,921		44,921		44,921		44,921	84,733	89,873		89,873		89,873		99,885		99,885	99,885	
Over Design	%	0	10		10		10		10		10		10	10	10		10		10		10		10	10	
Rated Flow Rate	kg/hr	61,808	49,413		49,413		49,413		49,413		49,413		49,413	93,206	98,860		98,860		98,860		109,874		109,874	109,874	
Temperature	°C	45.0	45.0		45.0		45.0		45.0		45.0		45.0	67.0	66.0		243.0		260.0		310.0		127.0	127.0	
Pressure @Inlet	kg/cm²G	-0.60	-0.60		34.20	34.20	34.00	34.00	33.80	33.79	32.39	32.39	32.19	31.40	31.40	31.36	29.76	29.74	29.24	29.21	26.71	26.67	25.47	24.78	
Pressure @Destination	kg/cm²G	-0.60	0.01		34.20	34.00	34.00	33.80	33.79	32.39	32.39	32.19	31.40	31.40	31.36	29.76	29.74	29.24	29.21	26.71	26.67	25.47	24.78	24.70	
Line Size	inch	8	8		6		6		6		6		6	12	12		14		14		14		12	12	
Equivalent Length	M	6.5	45.5		7.7		7.7		7.7		7.7		8	9	85		35		35		44		9	68	
Elevation Change	M	0.0	-8.6		0.0		0.0		0.0		0.0		10	0	0		0		0		0		0	0	
Fluid, Density	kg/m³	803.2	803.2		803.2		803.2		803.2		803.2		803.2	751.9	176.7		26.7		25.3		24.3		133.2	130.8	
Fluid, Viscosity	cP	0.33	0.33		0.33		0.33		0.33		0.33		0.33	0.23			0.02		0.02		0.02				
Velocity	m/sec	0.66	0.53		0.92		0.92		0.92		0.92		0.92	0.48			11.34		11.99		13.88				
Pres. Drop by Friction	kg/cm²	0.001	0.004		0.003	0.000	0.003	0.000	0.003	0.000	0.003	0.000	0.003	0.000	0.044	0.000	0.025	0.000	0.026	0.000	0.043	0.000	0.009	0.077	
Pres. Drop by Gravity	kg/cm²	0.000	-0.687		0.000	0.000	0.000	0.000	0.000	0.000	0.000	0.000	0.783	0.000	0.000	0.000	0.000	0.000	0.000	0.000	0.000	0.000	0.000	0.000	
Pressure Drop / 100 M	kg/cm²	0.014	0.009		0.037		0.037		0.037		0.037		0.037	0.004	0.052		0.070		0.074		0.097		0.109	0.113	
Equipment Pres. Drop	kg/cm²		0.07			0.20		0.20				0.20				1.60		0.50		2.50		1.20			
CV PRESSURE DROP	kg/cm²									1.40													0.68		

LINE IDENTIFICATION		1	2	3	4	5	6	7	8	9	10	11	12	13	14	15	16	17
SIMU. STREAM ID																		
SERVICE				Pump DS							E-711 A/B/C/D		R-702 A/B			PUMP MIN. FLOW		
TYPE OF FLOW	(L/V/2PH)	LIQUID	LIQUID	LIQUID	LIQUID	LIQUID	LIQUID	LIQUID	LIQUID	2PH	VAPOR	VAPOR	VAPOR	2PH	2PH	LIQUID		
OPERATING CONDITION																		
Temperature	C	45	45	45	45	45	45	45	67	66	243	260	310	127	127	45		
Pressure @up	Kg/cm2.G									31.51				25.58	24.89			
Pressure @down	Kg/cm2.G	0.00	0.68	0.00	0.00	0.00	0.00	-0.79	0.00	31.47	-0.02	-0.03	-0.04	25.57	24.81			
PIPING INFORMATION																		
Nominal Size	inch	8.0	8.0	6.0	6.0	6.0	6.0	6.0	12.0	12.0	14.0	14.0	14.0	12.0	12.0	3.0		
Schedule or Class	-	40	40	40	40	40	40	40	40	40	20	20	20	40	40	40		
Line length,straight	m	5.0	35.0	5.0	5.0	5.0	5.0	5.0	5.0	50.0	20.0	20.0	25.0	5.0	40	40.0		
Eqivalent Length Over Design Factor	-	0.25	0.25	0.50	0.50	0.50	0.50	0.50	0.50	0.50	0.50	0.50	0.50	0.50	0.50	0.50		
Net Elevation Change	m	0.0	(8.6)	0.0	0.0	0.0	0.0	9.8	0.0	0.0	0.0	0.0	0.0	0.0	0.0	10.8		
Equivalent Length	m	6.5	45.5	7.7	7.7	7.7	7.7	7.7	8.5	85.5	35.1	35.1	43.9	8.5	68.4	56.3		
Pipe inside Dia.	m	0.203	0.203	0.154	0.154	0.154	0.154	0.154	0.303	0.303	0.340	0.340	0.340	0.303	0.303	0.078		
Wall Roughness	mm	0.046	0.046	0.046	0.046	0.046	0.046	0.046	0.046	0.046	0.046	0.046	0.046	0.046	0.046	0.046		
LIQUID PHASE CALCULATION																		
Flow Rate	Kg/h	61,808	44,921	44,921	44,921	44,921	44,921	44,921	84,733	82,622				70,784	70,278	24,651		
Flow Rate Design Margin	%		10	10	10	10	10	10	10	10				10	10			
Density @PT	Kg/m3	803.2	803.2	803.2	803.2	803.2	803.2	803.2	751.9	755.6				682.8	683.8	821.7		
Viscosity @PT	cP	0.330	0.330	0.330	0.330	0.330	0.330	0.330	0.230	0.24				0.160	0.160	0.330		
Surface Tension	dyn/cm									17.9				11.2	11.3			
Flow Rate, rated	kg/h	61,808	49,413	49,413	49,413	49,413	49,413	49,413	93,206	90,884				77,862	77,306	24,651		
Vol. Flow	m3/hr	77.0	61.5	61.5	61.5	61.5	61.5	61.5	124.0	120.3				114.0	113.1	30.0		
Velocity	m/s	0.66	0.53	0.92	0.92	0.92	0.92	0.92	0.48	0.46				0.44	0.43	1.75		
Reynolds No	-	3.27E+05	2.61E+05	3.44E+05	3.44E+05	3.44E+05	3.44E+05	3.44E+05	4.73E+05	4.42E+05				5.68E+05	5.64E+05	3.39E+05		
Friction Factor	-	0.0163	0.0167	0.0168	0.0168	0.0168	0.0168	0.0168	0.0151	0.0152				0.0148	0.0148	0.0186		
Press. @Out	Kg/cm2.G	-0.001	0.682	-0.003	-0.003	-0.003	-0.003	-0.786	0.000	31.506				25.580	24.888	-1.055		
Pressure Drop by Friction	Kg/cm2	0.0009	0.004	0.003	0.003	0.003	0.003	0.003	0.000	0.004				0.000	0.002	0.172		
Pressure Drop by Gravity	Kg/cm2	0.000	-0.687	0.000	0.000	0.000	0.000	0.783	0.000							0.883		
Dp / 100 m (by friction)	Kg/cm2	0.0144	0.0095	0.0374	0.0374	0.0374	0.0374	0.0374	0.0043							0.3046		
VAPOR PHASE CALCULATION																		
Flow Rate,max op	Kg/h									7,251	89,873	89,873	99,885	29,101	29,607			
Flow Rate Design Margin	%									10	10	10	10	10	10			
Density @PT	Kg/m3									6.06	26.7	25.3	24.25	15.58	15.33			
or MW	(-)																	
Compr. Z	(-)																	
Viscosity @PT	cP									0.013	0.019	0.019	0.019	0.016	0.016			
Flow Rate,rated	Kg/h									7,976	98,860	98,860	109,874	32,011	32,568			
Vol. Flow @in	m3/sec									0.37	1.03	1.09	1.26	0.57	0.59			
Gas Density @in	Kg/m3									6.06	26.72	25.26	24.25	15.58	15.33			
Velocity @in	m/s									5.06	11.34	11.99	13.88	7.90	8.17			
Reynolds No	-									7.16E+05	5.42E+06	5.42E+06	6.02E+06	2.33E+06	2.37E+06			
Friction Factor	-									0.0145	0.0130	0.0130	0.0129	0.0135	0.0135			
Gas Dns @Out	Kg/m3									6.058	26.083	24.621	23.246	15.579	15.321			
Velocity @Out	m/s									5.064	11.613	12.303	14.482	7.904	8.177			
Mach no. @Out	-									0.006	0.159	0.164	0.189	0.016	0.017			
Press. @Out	Kg/cm2.G									31.507	-0.025	-0.026	-0.043	25.578	24.874			
Pressure Drop by Friction	Kg/cm2									0.003	0.025	0.026	0.043	0.002	0.016			
Pressure Drop by Gravity	Kg/cm2										0.000	0.000	0.000					
Dp / 100 m (by friction)	Kg/cm2										0.0701	0.0743	0.0974					

LINE IDENTIFICATION		1	2	3	4	5	6	7	8	9	10	11	12	13	14	15	16	17
TWO-PHASE CALCULATION METHOD SELECTION										DuklerII				DuklerII	DuklerII			
TWO-PHASE CALCULATION (HTFS)																		
Vapor Flow rate @ outlet	Kg/hr									7,976				32,011	32,568			
Upward Angle	deg																	
C factor										16.989				11.907	12.001			
Liquid + Vapor density	Kg/m3									183.596				109.188	106.706			
Mach No.										0.025				0.036	0.037			
Slip Ratio										3.397				2.940	2.975			
Void Fraction										0.763				0.860	0.863			
Pressure Drop by Acceleration										0.000				0.000	0.000			
Pressure Drop by Friction	Kg/cm2									0.064				0.011	0.089			
Pres. Drop by Gravity	Kg/cm2									0.000				0.000	0.000			
TWO-PHASE CALCULATION (Homogeneous)																		
Bulk density	Kg/m3									62.56				46.06	44.64			
Bulk viscosity, centipoise	cP									0.032				0.024	0.023			
Velocity, m/sec	m/s									5.527				8.342	8.607			
Reynolds number	-									3.28E+06				4.94E+06	5.01E+06			
Friction factor	-									0.013				0.013	0.013			
Pressure Drop by Friction	Kg/cm2									0.037				0.006	0.050			
Pressure Drop by Gravity	Kg/cm2									0.000				0.000	0.000			
TWO-PHASE CALCULATION (Dukler)																		
In-place density	Kg/m3									176.71				133.19	130.77			
Reynolds number	-									1.56E+06				2.97E+06	3.01E+06			
Friction factor	-									0.014				0.013	0.013			
Pressure Drop by Friction	Kg/cm2									0.044				0.009	0.077			
Pressure Drop by Gravity	Kg/cm2									0.000				0.000	0.000			
Press. @Out	Kg/cm2.G									31.466				25.571	24.813			
Press. Drop	Kg/cm2									0.044				0.009	0.077			
FLOW REGIME FOR VERTICAL																		
Simpson	X-Axis(Xd)									0.002				0.004	0.004			
	Y-Axis(Fr)									0.264				0.700	0.718			
	Flow Regime									Intermit				Intermit	Intermit			
Griffith and Wallies	X-Axis									10.27				23.41	24.91			
	Y-Axis									0.92				0.95	0.95			
	Flow Regime									Slug				Annular Mist	Annular Mist			
Taitel and Dukler	Flow Regime									Annular				Annular	Annular			
(1) Bubble-Slug	X-Axis									41.10				70.59	72.84			
Annular trans	Y-Axis									0.09				0.06	0.05			
(2) Slug-Chum	X-Axis									3.21				4.84	4.99			
Transition	Y-Axis									0.92				0.95	0.95			
	2ph Re no.									5.28E+06				1.08E+07	1.12E+07			
(3) Annular-Churn	X-Axis									1.04				0.38	0.37			
Slug Trans.	Y-Axis									3.68				10.66	10.91			
FLOW REGIME FOR HORIZONTAL																		
Taitel and Dukler	X-Axis(Xp)									1.04				0.38	0.37			
	Y-Axis(Fr)									0.26				0.70	0.72			
	Y-Axis(Xt)									0.22				0.06	0.18			
	Y-Axis(Xk)									175.48				527.69	538.78			
	Flow Regime									Slug				Annular	Annular			
Baker	X-Axis									67.76				32.93	31.59			
	Y-Axis									11563				30444	31202			
	Flow Regime									Annular				Dispersed	Dispersed			

30-P-106A/B

LOTTE E&C 롯데건설주식회사

JOB NO.		PREPD BY:	J.H.Kim	DATE:	Sep. 26 '22	PAGE:	1/2	0
SERVICE	DEOCTANIZER BOTTOM PUMP (PATH1)	CHKD BY:	J.H.Myung	APPD BY:	J.Y.Kim			

*** Result**

1) NPSHA
Datasheet : 4.62 m
Calculation : 4.61 m
-> No Problem

1) Diff. Pressure
Datasheet : 7.35 kg/cm2
Calculation : 7.35 kg/cm2
-> No problem

2) Line Size
Referece
- Suc. : Velocity : 1.2 ~ 2.4 m/s, ΔP/100m : 0.23 kg/cm2
- Disch. : Velocity : 1.8 ~ 2.4 m/s, ΔP/100m : 0.92 kg/cm2

-> No problem

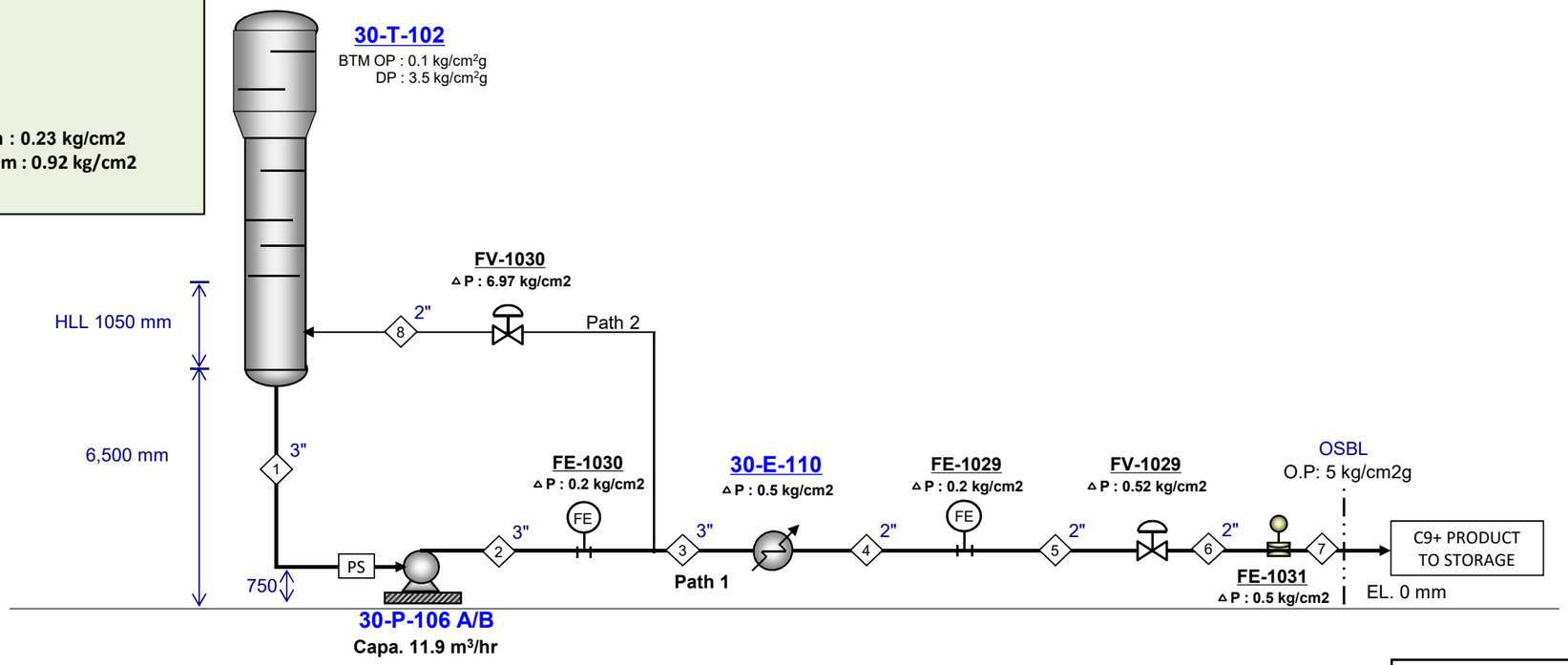

NOTE : 1. Assumed Data as below.
- Permanent Strainer △P = 0.07 kg/cm2
- Flow Element △P = 0.2 kg/cm2
- Warm-up Flow = 0.2 m3/hr

CV Input Data		
Item No.		
Des. Cap.		
Density		
D.P		
Char.		

PUMP CALCULATION

ITEM NUMBER	30-P-106A/B	
SUCTION		
Flow Rate	12.1	m3/hr
Operating Pres.	0.1	kg/cm².G
Design Pres.	3.5	kg/cm².G
Min. Static Head	6.5	meter
Max. Static Head	7.55	meter
Pump Shaft Level	0.75	meter
Vapor Pres.	1.133	kg/cm².A
Allowance	0	meter
Pipe Friction Loss	0.016	kg/cm²
Strainer	0.07	kg/cm²
Others		kg/cm²
Net Suction Pres.	0.45	kg/cm².G
Max. Suction Pres.	4.02	kg/cm².G
NPSH Available	4.61	meter
DISCHARGE		
Operating Pres.	5.0	kg/cm².G
Max. Static Head	0.8	meter
Pipe friction Loss	0.884	kg/cm².G
Pipe Gravity Loss	0.000	kg/cm³.G
Equip. Pres. Drop	1.4	kg/cm².G
Control Valves	0.5	kg/cm².G
Others		kg/cm².G
Disch. Press. Req'd	7.80	kg/cm².G
Diff. Pres.	7.35	kg/cm²
Diff. Head (Net)	97	meter
Hydr. Horsepower	2.4	KW
Est. Efficieny		%
Est. BHP		KW
Est. Shut-off Pres.	13.21	kg/cm².G
C.V dp / Friction	22.76	%

CONTROL VALVES

ITEM NO.	CAL. CV	RTD CV	% OPEN

		SUCTION			DISCHARGE										
STREAM ID	UNIT	1			2	FE-1030	3	E-110	4	FE-1029	5	FV-1029	6	FE-1031	7
Design Case															
Phase		LIQUID			LIQUID		LIQUID		LIQUID		LIQUID		LIQUID		LIQUID
Vapor Fraction															
Normal Flow Rate	kg/hr	8,334			8,334		8,193		8,193		8,193		8,193		8,193
Over Design	%	10			10		10		10		10		10		10
Rated Flow Rate	kg/hr	9,168			9,168		9,012		9,012		9,012		9,012		9,012
Temperature	°C	178.0			178.0		178.0		50.0		50.0		50.0		50.0
Pressure @Inlet	kg/cm²G	0.10			7.80	7.80	7.60	7.58	7.08	7.06	6.86	6.83	6.31	6.27	5.77
Pressure @Destination	kg/cm²G	0.45			7.80	7.60	7.58	7.08	7.06	6.86	6.83	6.31	6.27	5.77	5.00
Line Size	inch	3			3		3		2		2		2		2
Equivalent Length	M	33.7			7.0		46.5		6.8		6.8		14		234
Elevation Change	M	-5.8			0.0		0.0		0.0		0.0		0.0		0
Fluid, Density	kg/m³	758.9			758.9		758.9		864.6		864.6		864.6		864.6
Fluid, Viscosity	cP	0.24			0.24		0.24		0.65		0.65		0.65		0.65
Velocity	m/sec	0.70			0.70		0.69		1.34		1.34		1.34		1.34
Pres. Drop by Friction	kg/cm²	0.016			0.003	0.000	0.022	0.000	0.022	0.000	0.022	0.000	0.045	0.000	0.770
Pres. Drop by Gravity	kg/cm²	-0.436			0.000	0.000	0.000	0.000	0.000	0.000	0.000	0.000	0.000	0.000	0.000
Pressure Drop / 100 M	kg/cm²	0.048			0.048		0.046		0.329		0.329		0.329		0.329
Equipment Pres. Drop	kg/cm²	0.07				0.20		0.5		0.20				0.50	
CV PRESSURE DROP	kg/cm²											0.52			

LOTTE E&C 롯데건설주식회사	JOB NO.		PREPD BY: J.H.Kim	DATE: Sep. 26 '22	PAGE: 2/2	0
	SERVICE	DEOCTANIZER BOTTOM PUMP (PATH2)	CHKD BY: J.H.Myung	APPD BY: J.Y.Kim		

*** Result**

1) NPSHA
Datasheet : 4.62 m
Calculation : 4.79 m
-> No Problem

1) Diff. Pressure
Datasheet : 7.35 kg/cm2
Calculation : 7.35 kg/cm2
-> No problem

2) Line Size
Referece
- Suc. : Velocity : 1.2 ~ 2.4 m/s, ΔP/100m : 0.23 kg/cm2
- Disch. : Velocity : 1.8 ~ 2.4 m/s, ΔP/100m : 0.92 kg/cm2

-> No problem

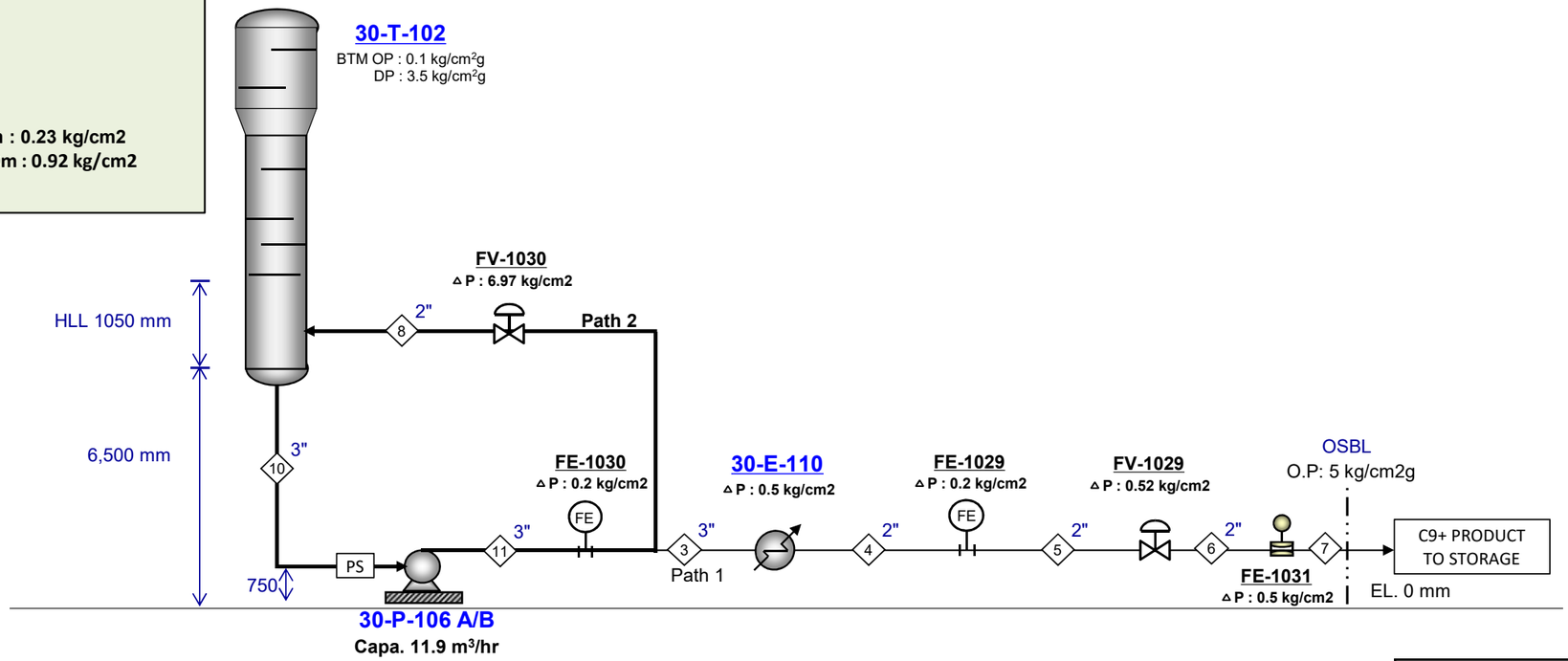

NOTE : 1. Assumed Data as below.
- Permanent Strainer △P = 0.07 kg/cm2
- Flow Element △P = 0.2 kg/cm2
- Warm-up Flow = 0.2 m3/hr

CV Input Data		
Item No.		
Des. Cap.		
Density		
D.P		
Char.		

PUMP CALCULATION

ITEM NUMBER	30-P-106A/B	
SUCTION		
Flow Rate	12.1	m3/hr
Operating Pres.	0.1	kg/cm2.G
Design Pres.	3.5	kg/cm2.G
Min. Static Head	6.5	meter
Max. Static Head	7.55	meter
Pump Shaft Level	0.75	meter
Vapor Pres.	1.133	kg/cm2.A
Allowance	0	meter
Pipe Friction Loss	0.003	kg/cm2
Strainer	0.07	kg/cm2
Others		kg/cm2
Net Suction Pres.	0.46	kg/cm2.G
Max. Suction Pres.	4.02	kg/cm2.G
NPSH Available	4.79	meter
DISCHARGE		
Operating Pres.	0.1	kg/cm2.G
Max. Static Head	7.6	meter
Pipe friction Loss	0.025	kg/cm2.G
Pipe Gravity Loss	0.516	kg/cm3.G
Equip. Pres. Drop	0.2	kg/cm2.G
Control Valves	7.0	kg/cm2.G
Others		kg/cm2.G
Disch. Press. Req'd	7.81	kg/cm2.G
Diff. Pres.	7.35	kg/cm2
Diff. Head (Net)	97	meter
Hydr. Horsepower	1.0	KW
Est. Efficieny		%
Est. BHP		KW
Est. Shut-off Pres.	13.20	kg/cm2.G
C.V dp / Friction	3091.06	%

CONTROL VALVES

ITEM NO.	CAL. CV	RTD CV	% OPEN

STREAM ID	UNIT	SUCTION 10			DISCHARGE 11	FE-1030	FV-1030	8
Design Case								
Phase		LIQUID			LIQUID			LIQUID
Vapor Fraction								
Normal Flow Rate	kg/hr	3,795			3,795			3,795
Over Design	%	0			0			0
Rated Flow Rate	kg/hr	3,795			3,795			3,795
Temperature	°C	178.0			178.0			178.0
Pressure @Inlet	kg/cm2G	0.10			7.81	7.81	7.61	0.64
Pressure @Destination	kg/cm2G	0.46			7.81	7.61	0.64	0.10
Line Size	inch	3			3			2
Equivalent Length	M	33.7			7.0			37.9
Elevation Change	M	-5.8			0.0			6.8
Fluid, Density	kg/m3	758.9			758.9			758.9
Fluid, Viscosity	cP	0.24			0.24			0.24
Velocity	m/sec	0.29			0.29			0.64
Pres. Drop by Friction	kg/cm2	0.003			0.001	0.000	0.000	0.025
Pres. Drop by Gravity	kg/cm2	-0.436			0.000	0.000	0.000	0.516
Pressure Drop / 100 M	kg/cm2	0.009			0.009			0.066
Equipment Pres. Drop	kg/cm2	0.07				0.20		
CV PRESSURE DROP	kg/cm2						6.97	

LINE IDENTIFICATION		1	2	3	4	5	6	7	8	9	10	11	12	13	14	15	16	17
SIMU. STREAM ID																		
SERVICE			Pump DS						PUMP MIN. FLOW									
TYPE OF FLOW	(L/V/2PH)	LIQUID	LIQUID	LIQUID	LIQUID	LIQUID	LIQUID	LIQUID	LIQUID	LIQUID	LIQUID	LIQUID						
OPERATING CONDITION																		
Temperature	C	178	178	178	50	50	50	50	178	50	178	178						
Pressure @up	Kg/cm2.G																	
Pressure @down	Kg/cm2.G	0.42	0.00	-0.02	-0.02	-0.02	-0.04	-0.77	-0.54	-1.21	0.43	0.00						
PIPING INFORMATION																		
Nominal Size	inch	3.0	3.0	3.0	2.0	2.0	2.0	2.0	2.0	2.0	3.0	3.0						
Schedule or Class	-	40	40	40	40	40	40	40	40	40	40	40						
Line length,straight	m	28.0	5.0	33.0	5.0	5.0	10.0	173.0	28.0	180.0	28.0	5.0						
Eqivalent Length Over Design Factor	-	0.25	0.5	0.5	0.5	0.5	0.5	0.5	0.50	0.5	0.25	0.5						
Net Elevation Change	m	(5.8)							6.8	4.8	(5.8)							
Equivalent Length	m	33.7	7.0	46.5	6.8	6.8	13.5	234.1	37.9	243.6	33.7	7.0						
Pipe inside Dia.	m	0.078	0.078	0.078	0.053	0.053	0.053	0.053	0.053	0.053	0.078	0.078						
Wall Roughness	mm	0.046	0.046	0.046	0.046	0.046	0.046	0.046	0.046	0.046	0.046	0.046						
LIQUID PHASE CALCULATION																		
Flow Rate	Kg/h	8,334	8,334	8,193	8,193	8,193	8,193	8,193	3,795	8,193	3,795	3,795						
Flow Rate Design Margin	%	10	10	10	10	10	10	10		10								
Density @PT	Kg/m3	758.9	758.9	758.9	864.6	864.6	864.6	864.6	758.9	864.6	758.9	758.9						
Viscosity @PT	cP	0.240	0.240	0.240	0.650	0.650	0.650	0.650	0.240	0.650	0.240	0.240						
Surface Tension	dyn/cm																	
Flow Rate, rated	kg/h	9,168	9,168	9,012	9,012	9,012	9,012	9,012	3,795	9,012	3,795	3,795						
Vol. Flow	m3/hr	12.1	12.1	11.9	10.4	10.4	10.4	10.4	5.0	10.4	5.0	5.0						
Velocity	m/s	0.70	0.70	0.69	1.34	1.34	1.34	1.34	0.64	1.34	0.29	0.29						
Reynolds No	-	1.73E+05	1.73E+05	1.70E+05	9.34E+04	9.34E+04	9.34E+04	9.34E+04	1.07E+05	9.34E+04	7.18E+04	7.18E+04						
Friction Factor	-	0.0195	0.0195	0.0195	0.0219	0.0219	0.0219	0.0219	0.0216	0.0219	0.0216	0.0216						
Press. @Out	Kg/cm2.G	0.420	-0.003	-0.022	-0.022	-0.022	-0.045	-0.770	-0.541	-1.212	0.433	-0.001						
Pressure Drop by Friction	Kg/cm2	0.0162	0.003	0.022	0.022	0.022	0.045	0.770	0.025	0.802	0.003	0.001						
Pressure Drop by Gravity	Kg/cm2	-0.436	0.000	0.000	0.000	0.000	0.000	0.000	0.516	0.411	-0.436	0.000						
Dp / 100 m (by friction)	Kg/cm2	0.0479	0.0479	0.0464	0.3291	0.3291	0.3291	0.3291	0.0656	0.3291	0.0091	0.0091						
VAPOR PHASE CALCULATION																		
Flow Rate,max op	Kg/h																	
Flow Rate Design Margin	%																	
Density @PT	Kg/m3																	
or MW	(-)																	
Compr. Z	(-)																	
Viscosity @PT	cP																	
Flow Rate,rated	Kg/h																	
Vol. Flow @in	m3/sec																	
Gas Density @in	Kg/m3																	
Velocity @in	m/s																	
Reynolds No	-																	
Friction Factor	-																	
Gas Dns @Out	Kg/m3																	
Velocity @Out	m/s																	
Mach no. @Out	-																	
Press. @Out	Kg/cm2.G																	
Pressure Drop by Friction	Kg/cm2																	
Pressure Drop by Gravity	Kg/cm2																	
Dp / 100 m (by friction)	Kg/cm2																	

30-P-201A/B

LOTTE E&C 롯데건설주식회사

JOB NO.		PREPD BY:	J.H.Kim	DATE:	Sep. 26 '22	PAGE:	1/3	0
SERVICE	GHU-II RECYCLE PUMP (PATH 1)	CHKD BY:	J.H.Myung	APPD BY:	J.Y.Kim			

*** Result**

1) NPSHA
Datasheet : 3.34 m
Calculation : 3.79 m
-> No Problem

2) Diff. Pressure
Datasheet : 8.47 kg/cm2
Calculation : 8.47 kg/cm2
-> No Problem

3) Line Size
Referece
- Suc. : Velocity : 1.2 ~ 2.4 m/s, ΔP/100m : 0.23 kg/cm2
- Disch. : Velocity : 2.4 ~ 3.0 m/s, ΔP/100m : 0.92 kg/cm2

PATH 1

GOVERNING CASE

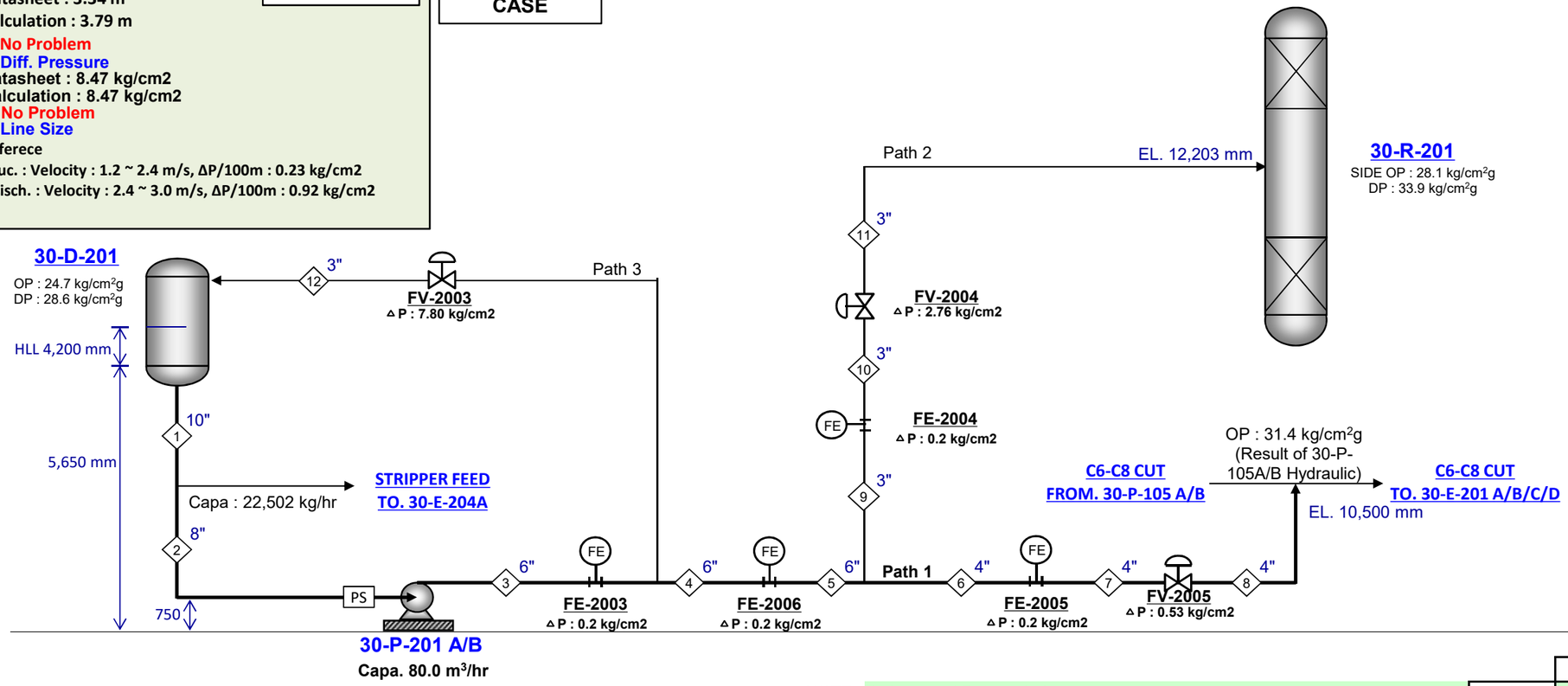

NOTE : 1. Assumed Data as below.
- Permanent Strainer △P = 0.07 kg/cm2
- Flow Element △P = 0.2 kg/cm2

CV Input Data		
Item No.		
Des. Cap.		
Density		
D.P		
Char.		

PUMP CALCULATION		
ITEM NUMBER	**30-P-201A/B**	
SUCTION		
Flow Rate	80.3	m3/hr
Operating Pres.	24.7	kg/cm².G
Design Pres.	28.6	kg/cm².G
Min. Static Head	5.65	meter
Max. Static Head	9.85	meter
Pump Shaft Level	0.75	meter
Vapor Pres.	25.73	kg/cm².A
Allowance	0	meter
Pipe Friction Loss	0.006	kg/cm²
Strainer	0.07	kg/cm²
Others		kg/cm²
Net Suction Pres.	24.96	kg/cm².G
Max. Suction Pres.	29.22	kg/cm².G
NPSH Available	3.79	meter
DISCHARGE		
Operating Pres.	31.4	kg/cm².G
Max. Static Head	10.5	meter
Pipe friction Loss	0.226	kg/cm².G
Pipe Gravity Loss	0.669	kg/cm².G
Equip. Pres. Drop	0.6	kg/cm².G
Control Valves	0.5	kg/cm².G
Others		kg/cm².G
Disch. Press. Req'd	33.42	kg/cm².G
Diff. Pres.	8.47	kg/cm²
Diff. Head (Net)	124	meter
Hydr. Horsepower	18.5	KW
Est. Efficieny		%
Est. BHP		KW
Est. Shut-off Pres.	39.80	kg/cm².G
C.V dp / Friction	64.14	%

CONTROL VALVES			
ITEM NO.	CAL. CV	RTD CV	% OPEN

		SUCTION			DISCHARGE																	
STREAM ID	UNIT	1	2		3	FE-2003	4	FE-2006	5	6	FE-2005	7	FV-2005	8								
Design Case																						
Phase		LIQUID	LIQUID		LIQUID		LIQUID		LIQUID	LIQUID		LIQUID		LIQUID								
Vapor Fraction																						
Normal Flow Rate	kg/hr	70,369	49,913		49,913		49,727		49,727	39,812		39,812		39,812								
Over Design	%	10	10		10		10		10	10		10		10								
Rated Flow Rate	kg/hr	77,406	54,905		54,905		54,699		54,699	43,793		43,793		43,793								
Temperature	°C	150.0	150.0		150.0		150.0		150.0	150.0		150.0		150.0								
Pressure @Inlet	kg/cm²G	24.70	24.70		33.42	33.42	33.22	33.22	33.02	33.01	32.99	32.79	32.77	32.24								
Pressure @Destination	kg/cm²G	24.70	24.93		33.42	33.22	33.22	33.02	33.01	32.99	32.79	32.77	32.24	31.40								
Line Size	inch	10	8		6		6		6	4		4		4								
Equivalent Length	M	6.6	42.9		7.7		7.7		7.7	7.3		7.3		65								
Elevation Change	M	0.0	-4.5		0.0		0.0		0.0	0.0		0.0		10								
Fluid, Density	kg/m³	684.0	684.0		684.0		684.0		684.0	685.8		685.8		685.8								
Fluid, Viscosity	cP	0.16	0.16		0.16		0.16		0.16	0.16		0.16		0.16								
Velocity	m/sec	0.62	0.69		1.20		1.19		1.19	2.16		2.16		2.16								
Pres. Drop by Friction	kg/cm²	0.001	0.005		0.004	0.000	0.004	0.000	0.004	0.020	0.000	0.020	0.000	0.175								
Pres. Drop by Gravity	kg/cm²	0.000	-0.304		0.000	0.000	0.000	0.000	0.000	0.000	0.000	0.000	0.000	0.669								
Pressure Drop / 100 M	kg/cm²	0.008	0.013		0.051		0.051		0.051	0.269		0.269		0.269								
Equipment Pres. Drop	kg/cm²		0.07			0.20		0.20			0.20											
CV PRESSURE DROP	kg/cm²												0.53									

LOTTE E&C 롯데건설주식회사	JOB NO.		PREPD BY: J.H.Kim	DATE: Sep. 26 '22	PAGE: 2/3	0
	SERVICE	GHU-II RECYCLE PUMP (PATH 2)	CHKD BY: J.H.Myung	APPD BY: J.Y.Kim		

*** Result**

PATH 2

1) NPSHA
Datasheet : 3.34 m
Calculation : 3.79 m
-> No Problem
2) Diff. Pressure
Datasheet : 8.47 kg/cm2
Calculation : 8.47 kg/cm2
-> No Problem
3) Line Size
Referece
- Suc. : Velocity : 1.2 ~ 2.4 m/s, ΔP/100m : 0.23 kg/cm2
- Disch. : Velocity : 2.4 ~ 3.0 m/s, ΔP/100m : 0.92 kg/cm2

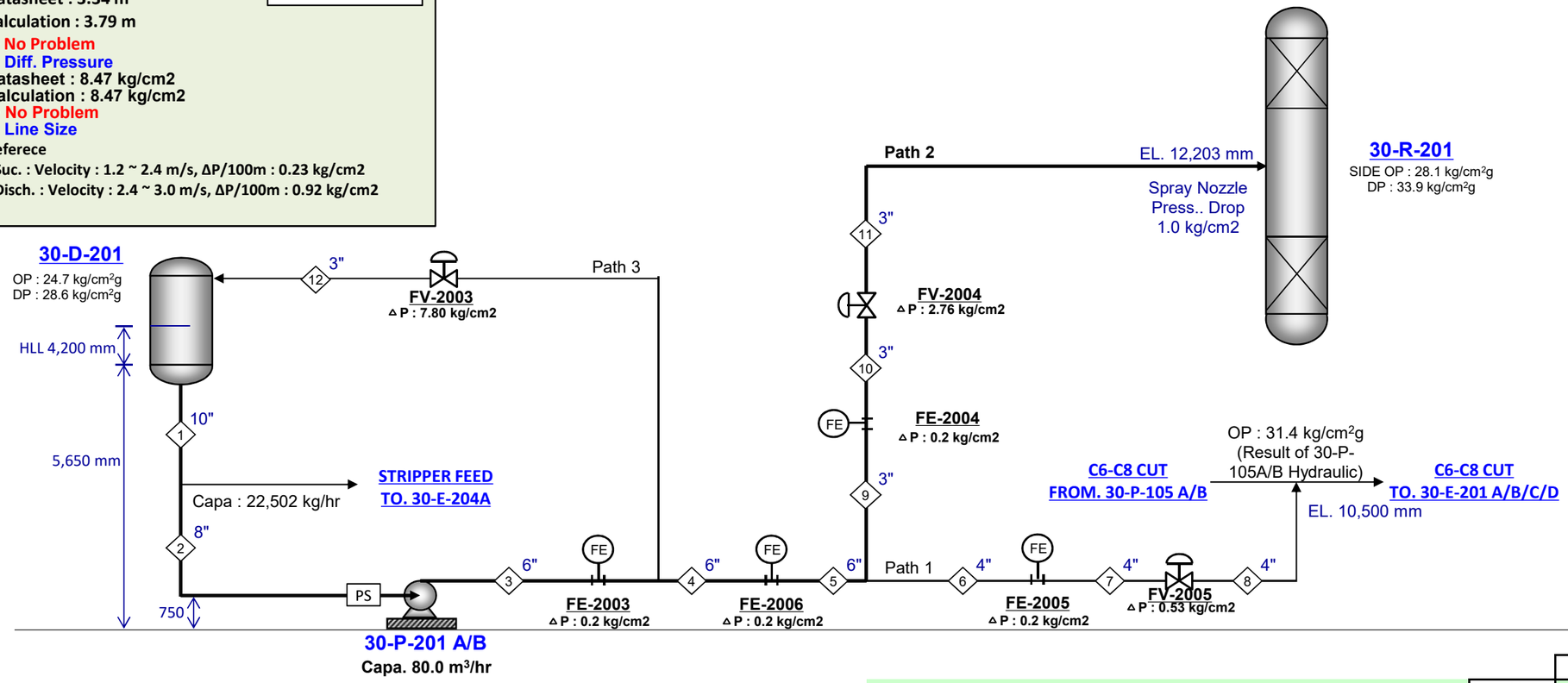

NOTE : 1. Assumed Data as below.
- Permanent Strainer △P = 0.07 kg/cm2
- Flow Element △P = 0.2 kg/cm2

	CV Input Data	
Item No.		
Des. Cap.		
Density		
D.P		
Char.		

PUMP CALCULATION		
ITEM NUMBER	**30-P-201A/B**	
SUCTION		
Flow Rate	80.3	m3/hr
Operating Pres.	24.7	kg/cm².G
Design Pres.	28.6	kg/cm².G
Min. Static Head	5.65	meter
Max. Static Head	9.85	meter
Pump Shaft Level	0.75	meter
Vapor Pres.	25.733	kg/cm².A
Allowance	0	meter
Pipe Friction Loss	0.006	kg/cm²
Strainer	0.07	kg/cm²
Others		kg/cm²
Net Suction Pres.	24.96	kg/cm².G
Max. Suction Pres.	29.22	kg/cm².G
NPSH Available	3.79	meter
DISCHARGE		
Operating Pres.	28.1	kg/cm².G
Max. Static Head	12.20	meter
Pipe friction Loss	0.086	kg/cm².G
Pipe Gravity Loss	0.784	kg/cm².G
Equip. Pres. Drop	1.6	kg/cm².G
Control Valves	2.8	kg/cm².G
Others	0.1	kg/cm².G
Disch. Press. Req'd	33.43	kg/cm².G
Diff. Pres.	8.47	kg/cm²
Diff. Head (Net)	124	meter
Hydr. Horsepower	18.5	KW
Est. Efficieny		%
Est. BHP		KW
Est. Shut-off Pres.	39.81	kg/cm².G
C.V dp / Friction	154.58	%

CONTROL VALVES			
ITEM NO.	CAL. CV	RTD CV	% OPEN

		SUCTION			DISCHARGE																	
STREAM ID	UNIT	1	2		3	FE-2003	4	FE-2006	5	9	FE-2004	10	FV-2004	11	Spray Nozzle							
Design Case																						
Phase		LIQUID	LIQUID		LIQUID		LIQUID		LIQUID	LIQUID		LIQUID		LIQUID								
Vapor Fraction																						
Normal Flow Rate	kg/hr	70,369	49,913		49,913		49,727		49,727	10,012		10,012		10,012								
Over Design	%	10	10		10		10		10	10		10		10								
Rated Flow Rate	kg/hr	77,406	54,905		54,905		54,699		54,699	11,013		11,013		11,013								
Temperature	°C	150.0	150.0		150.0		150.0		150.0	150.0		150.0		150.0								
Pressure @Inlet	kg/cm²G	24.70	24.70		33.43	33.43	33.23	33.22	33.02	33.02	33.01	32.81	32.81	30.05	29.20							
Pressure @Destination	kg/cm²G	24.70	24.93		33.43	33.23	33.22	33.02	33.02	33.01	32.81	32.81	30.05	29.20	28.20							
Line Size	inch	10	8		6		6		6	3		3		3								
Equivalent Length	M	6.6	42.9		7.7		7.7		7.7	7.0		7.0		87								
Elevation Change	M	0.0	-4.5		0.0		0.0		0.0	0.0		0.0		11								
Fluid, Density	kg/m³	684.0	684.0		684.0		684.0		684.0	684.9		684.9		684.9								
Fluid, Viscosity	cP	0.16	0.16		0.16		0.16		0.16	0.16		0.16		0.16								
Velocity	m/sec	0.62	0.69		1.20		1.19		1.19	0.94		0.94		0.94								
Pres. Drop by Friction	kg/cm²	0.001	0.005		0.004	0.000	0.004	0.000	0.004	0.005	0.000	0.005	0.000	0.063	0.000							
Pres. Drop by Gravity	kg/cm²	0.000	-0.304		0.000	0.000	0.000	0.000	0.000	0.000	0.000	0.000	0.000	0.784	0.000							
Pressure Drop / 100 M	kg/cm²	0.008	0.013		0.051		0.051		0.051	0.073		0.073		0.073								
Equipment Pres. Drop	kg/cm²		0.07			0.20		0.20			0.20				1.00							
CV PRESSURE DROP	kg/cm²												2.76									

LOTTE E&C 롯데건설주식회사	JOB NO.		PREPD BY: J.H.Kim	DATE: Sep. 26 '22	PAGE: 3/3	0
	SERVICE	GHU-II RECYCLE PUMP (PATH3)	CHKD BY: J.H.Myung	APPD BY: J.Y.Kim		

*** Result**

1) NPSHA

Datasheet : 3.34 m

Calculation : 3.87 m

-> No Problem

2) Diff. Pressure

Datasheet : 8.47 kg/cm2

Calculation : 8.46 kg/cm2

-> No Problem

3) Line Size

Referece

- Suc. : Velocity : 1.2 ~ 2.4 m/s, ΔP/100m : 0.23 kg/cm2

- Disch. : Velocity : 2.4 ~ 3.0 m/s, ΔP/100m : 0.92 kg/cm2

PATH 3

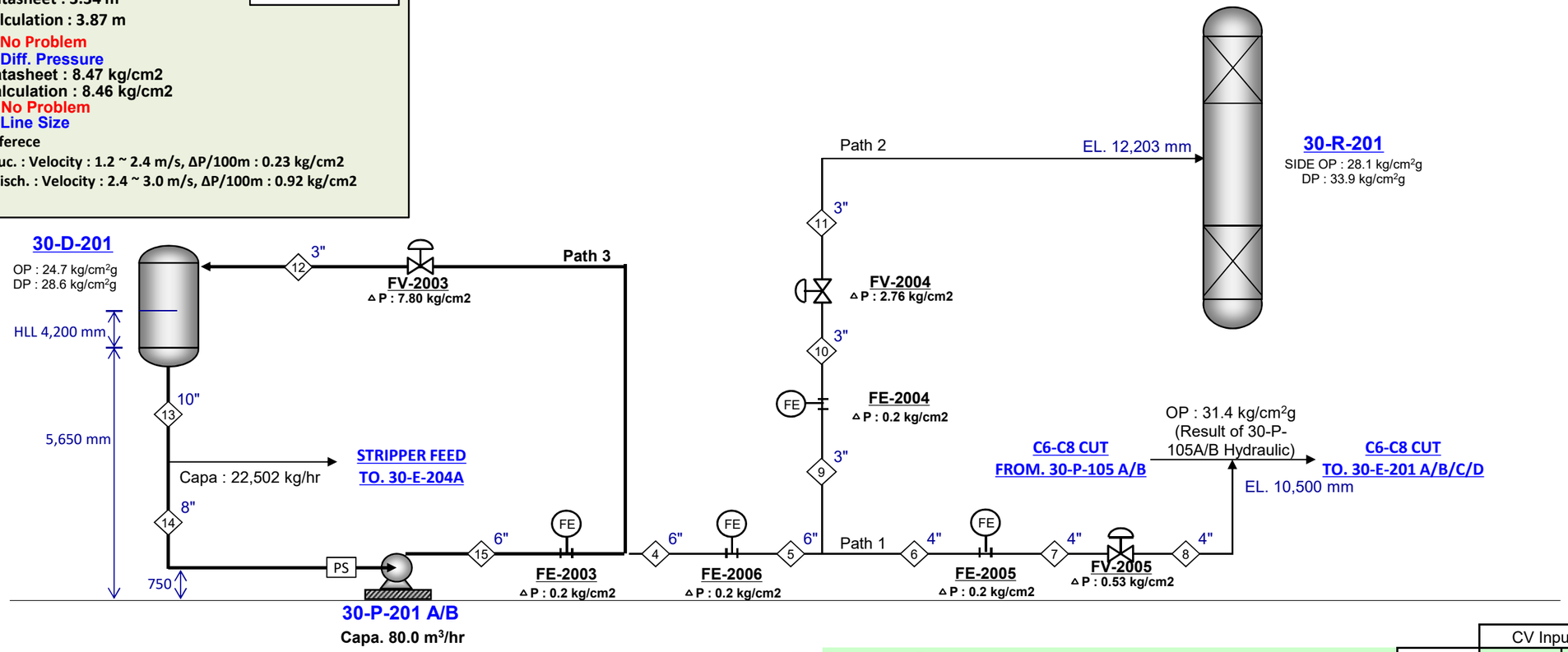

NOTE : 1. Assumed Data as below.
- Permanent Strainer △P = 0.07 kg/cm2
- Flow Element △P = 0.2 kg/cm2

CV Input Data		
Item No.		
Des. Cap.		
Density		
D.P		
Char.		

PUMP CALCULATION		
ITEM NUMBER	**30-P-201A/B**	
SUCTION		
Flow Rate	80.3	m3/hr
Operating Pres.	24.7	kg/cm².G
Design Pres.	28.6	kg/cm².G
Min. Static Head	5.65	meter
Max. Static Head	9.85	meter
Pump Shaft Level	0.75	meter
Vapor Pres.	25.73	kg/cm².A
Allowance	0	meter
Pipe Friction Loss	0.000	kg/cm²
Strainer	0.07	kg/cm²
Others		kg/cm²
Net Suction Pres.	24.96	kg/cm².G
Max. Suction Pres.	29.22	kg/cm².G
NPSH Available	3.87	meter
DISCHARGE		
Operating Pres.	24.7	kg/cm².G
Max. Static Head	10.5	meter
Pipe friction Loss	0.060	kg/cm².G
Pipe Gravity Loss	0.667	kg/cm².G
Equip. Pres. Drop	0.2	kg/cm².G
Control Valves	7.8	kg/cm².G
Others		kg/cm².G
Disch. Press. Req'd	33.43	kg/cm².G
Diff. Pres.	8.46	kg/cm²
Diff. Head (Net)	124	meter
Hydr. Horsepower	4.6	KW
Est. Efficieny		%
Est. BHP		KW
Est. Shut-off Pres.	39.80	kg/cm².G
C.V dp / Friction	2998.33	%

CONTROL VALVES			
ITEM NO.	CAL. CV	RTD CV	% OPEN

		SUCTION			DISCHARGE																	
STREAM ID	UNIT	13	14		15	FE-2003	FV-2003	12														
Design Case																						
Phase		LIQUID	LIQUID		LIQUID			LIQUID														
Vapor Fraction																						
Normal Flow Rate	kg/hr	13,680	13,680		13,680			13,680														
Over Design	%	0	0		0			0														
Rated Flow Rate	kg/hr	13,680	13,680		13,680			13,680														
Temperature	°C	150.0	150.0		150.0			150.0														
Pressure @Inlet	kg/cm²G	24.70	24.70		33.43	33.43	33.23	25.43														
Pressure @Destination	kg/cm²G	24.70	24.93		33.43	33.23	25.43	24.70														
Line Size	inch	10	8		6			3														
Equivalent Length	M	6.6	42.9		7.7			53.5														
Elevation Change	M	0.0	-4.5		0.0			9.8														
Fluid, Density	kg/m³	684.0	684.0		684.0			684.0														
Fluid, Viscosity	cP	0.16	0.16		0.16			0.16														
Velocity	m/sec	0.11	0.17		0.30			1.16														
Pres. Drop by Friction	kg/cm²	0.000	0.000		0.000	0.000	0.000	0.060														
Pres. Drop by Gravity	kg/cm²	0.000	-0.304		0.000	0.000	0.000	0.667														
Pressure Drop / 100 M	kg/cm²	0.000	0.001		0.004			0.112														
Equipment Pres. Drop	kg/cm²		0.07			0.20																
CV PRESSURE DROP	kg/cm²						7.80															

LINE IDENTIFICATION		1	2	3	4	5	6	7	8	9	10	11	12	13	14	15	16	17
SIMU. STREAM ID							Path 1			Path 2								
SERVICE				Pump DS									PUMP MIN. FLOW					
TYPE OF FLOW	(L/V/2PH)	LIQUID	LIQUID	LIQUID	LIQUID	LIQUID	LIQUID	LIQUID	LIQUID	LIQUID	LIQUID	LIQUID	LIQUID	LIQUID	LIQUID	LIQUID		
OPERATING CONDITION																		
Temperature	C	150	150	150	150	150	150	150	150	150	150	150	150	150	150	150		
Pressure @up	Kg/cm2.G	24.70	24.70	33.42	33.22	33.02	33.01	32.79	32.00	33.02	32.81	30.00	33.19					
Pressure @down	Kg/cm2.G	24.70	25.00	33.42	33.22	33.01	32.99	32.77	31.16	33.01	32.81	29.15	32.46	0.00	0.30	0.00		
PIPING INFORMATION																		
Nominal Size	inch	10.0	8.0	6.0	6.0	6.0	4.0	4.0	4.0	3.0	3.0	3.0	3.0	10.0	8.0	6.0		
Schedule or Class	-	40	40	40	40	40	40	40	40	40	40	40	40	40	40	40		
Line length,straight	m	5.0	33.0	5.0	5.0	5.0	5.0	5.0	44.8	5.0	5.0	61.5	38.0	5.0	33.0	5.0		
Eqivalent Length Over Design Factor	-	0.25	0.25	0.50	0.50	0.50	0.50	0.50	0.50	0.50	0.50	0.50	0.50	0.25	0.25	0.50		
Net Elevation Change	m		(4.5)	0.0	0.0	0.0	0.0	0.0	9.8			11.5	9.8		(4.5)	0.0		
Equivalent Length	m	6.6	42.9	7.7	7.7	7.7	7.3	7.3	65.1	7.0	7.0	86.6	53.5	6.6	42.9	7.7		
Pipe inside Dia.	m	0.255	0.203	0.154	0.154	0.154	0.102	0.102	0.102	0.078	0.078	0.078	0.078	0.255	0.203	0.154		
Wall Roughness	mm	0.046	0.046	0.046	0.046	0.046	0.046	0.046	0.046	0.046	0.046	0.046	0.046	0.046	0.046	0.046		
LIQUID PHASE CALCULATION																		
Flow Rate	Kg/h	70,369	49,913	49,913	49,727	49,727	39,812	39,812	39,812	10,012	10,012	10,012	13,680	13,680	13,680	13,680		
Flow Rate Design Margin	%	10	10	10	10	10	10	10	10	10	10	10	0	0	0	0		
Density @PT	Kg/m3	684.0	684.0	684.0	684.0	684.0	685.8	685.8	685.8	684.9	684.9	684.9	684.0	684.0	684.0	684.0		
Viscosity @PT	cP	0.160	0.160	0.160	0.160	0.160	0.160	0.160	0.160	0.160	0.160	0.160	0.160	0.160	0.160	0.160		
Surface Tension	dyn/cm																	
Flow Rate, rated	kg/h	77,406	54,905	54,905	54,699	54,699	43,793	43,793	43,793	11,013	11,013	11,013	13,680	13,680	13,680	13,680		
Vol. Flow	m3/hr	113.2	80.3	80.3	80.0	80.0	63.9	63.9	63.9	16.1	16.1	16.1	20.0	20.0	20.0	20.0		
Velocity	m/s	0.62	0.69	1.20	1.19	1.19	2.16	2.16	2.16	0.94	0.94	0.94	1.16	0.11	0.17	0.30		
Reynolds No	-	6.72E+05	5.99E+05	7.88E+05	7.85E+05	7.85E+05	9.47E+05	9.47E+05	9.47E+05	3.12E+05	3.12E+05	3.12E+05	3.88E+05	1.19E+05	1.49E+05	1.96E+05		
Friction Factor	-	0.0149	0.0155	0.0158	0.0158	0.0158	0.0169	0.0169	0.0169	0.0187	0.0187	0.0187	0.0184	0.0184	0.0180	0.0178		
Press. @Out	Kg/cm2.G	24.699	24.998	33.421	33.217	33.013	32.994	32.774	31.156	33.013	32.808	29.152	32.463	0.000	0.304	0.000		
Pressure Drop by Friction	Kg/cm2	0.0005	0.005	0.004	0.004	0.004	0.020	0.020	0.175	0.005	0.005	0.063	0.060	0.000	0.000	0.000		
Pressure Drop by Gravity	Kg/cm2	0.000	-0.304	0.000	0.000	0.000	0.000	0.000	0.669	0.000	0.000	0.784	0.667	0.000	-0.304	0.000		
Dp / 100 m (by friction)	Kg/cm2	0.0078	0.0127	0.0513	0.0509	0.0509	0.2693	0.2693	0.2693	0.0733	0.0733	0.0733	0.1119	0.0003	0.0009	0.0036		
VAPOR PHASE CALCULATION																		
Flow Rate,max op	Kg/h																	
Flow Rate Design Margin	%																	
Density @PT	Kg/m3																	
or MW	(-)																	
Compr. Z	(-)																	
Viscosity @PT	cP																	
Flow Rate,rated	Kg/h																	
Vol. Flow @in	m3/sec																	
Gas Density @in	Kg/m3																	
Velocity @in	m/s																	
Reynolds No	-																	
Friction Factor	-																	
Gas Dns @Out	Kg/m3																	
Velocity @Out	m/s																	
Mach no. @Out	-																	
Press. @Out	Kg/cm2.G																	
Pressure Drop by Friction	Kg/cm2																	
Pressure Drop by Gravity	Kg/cm2																	
Dp / 100 m (by friction)	Kg/cm2																	

LOTTE E&C 롯데건설주식회사

JOB NO.		PREPD BY:	J.H.Kim	DATE:	Sep. 26 '22	PAGE:	1/1	0
SERVICE	GHU-II RECYCLE PUMP (PATH 1)	CHKD BY:	J.H.Myung	APPD BY:	J.Y.Kim			

*** Result**

1) NPSHA
Datasheet : 3.34 m
Calculation : 3.9 m
-> No Problem

2) Diff. Pressure
Datasheet : 8.47 kg/cm2
Calculation : 8.47 kg/cm2
-> No Problem

3) Line Size
Referece
- Suc. : Velocity : 1.2 ~ 2.4 m/s, ΔP/100m : 0.23 kg/cm2
- Disch. : Velocity : 2.4 ~ 3.0 m/s, ΔP/100m : 0.92 kg/cm2

PATH 1

GOVERNING CASE

CASE A EOR

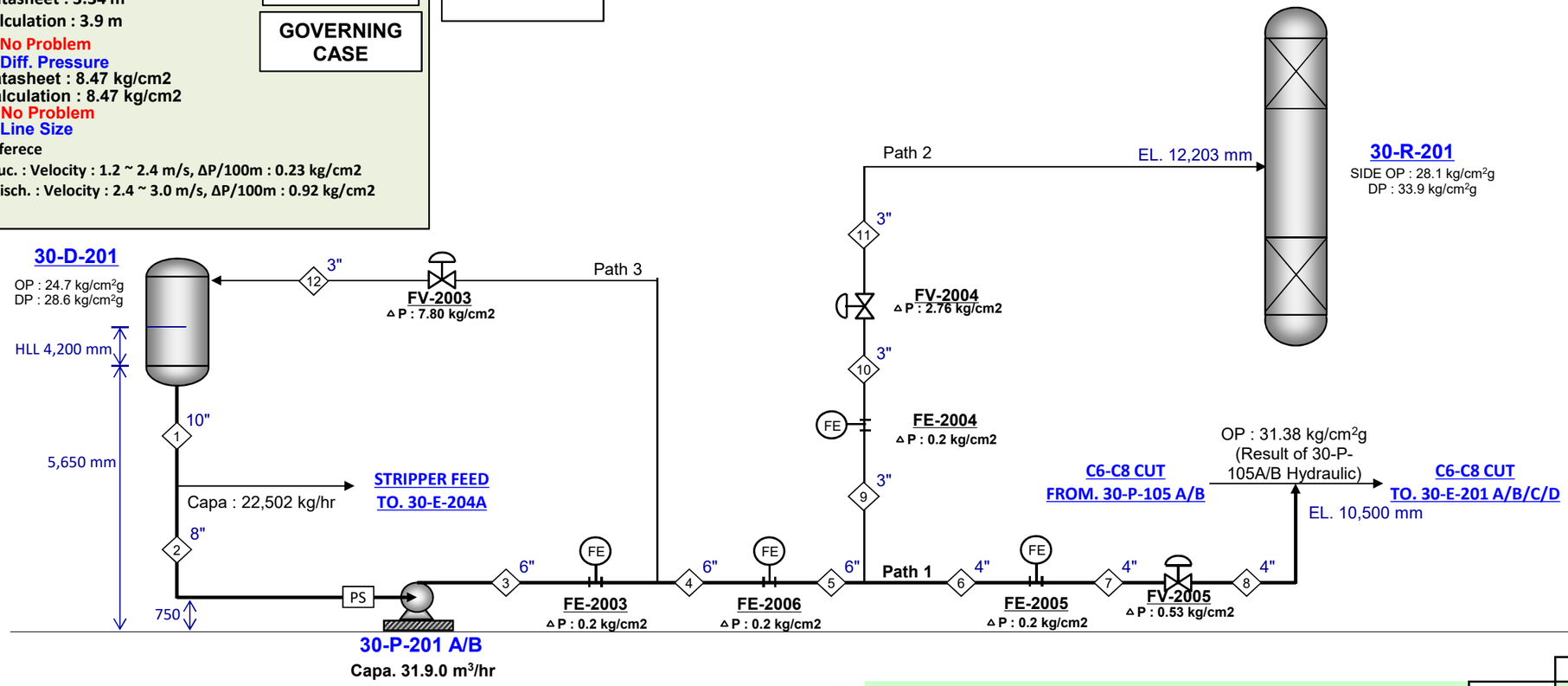

NOTE : 1. Assumed Data as below.
- Permanent Strainer △P = 0.07 kg/cm2
- Flow Element △P = 0.2 kg/cm2

CV Input Data		
Item No.		
Des. Cap.		
Density		
D.P		
Char.		

PUMP CALCULATION		
ITEM NUMBER	30-P-201A/B	
SUCTION		
Flow Rate	41.5	m3/hr
Operating Pres.	24.7	kg/cm².G
Design Pres.	28.6	kg/cm².G
Min. Static Head	5.65	meter
Max. Static Head	9.85	meter
Pump Shaft Level	0.75	meter
Vapor Pres.	25.73	kg/cm².A
Allowance	0	meter
Pipe Friction Loss	0.002	kg/cm²
Strainer	0.07	kg/cm²
Others		kg/cm²
Net Suction Pres.	24.98	kg/cm².G
Max. Suction Pres.	29.26	kg/cm².G
NPSH Available	3.90	meter
DISCHARGE		
Operating Pres.	31.38	kg/cm².G
Max. Static Head	10.5	meter
Pipe friction Loss	0.062	kg/cm².G
Pipe Gravity Loss	0.703	kg/cm².G
Equip. Pres. Drop	0.6	kg/cm².G
Control Valves	0.6	kg/cm².G
Others	0.15	kg/cm².G
Disch. Press. Req'd	33.46	kg/cm².G
Diff. Pres.	8.47	kg/cm²
Diff. Head (Net)	118	meter
Hydr. Horsepower	9.6	KW
Est. Efficieny		%
Est. BHP		KW
Est. Shut-off Pres.	39.85	kg/cm².G
C.V dp / Friction	68.98	%

CONTROL VALVES			
ITEM NO.	CAL. CV	RTD CV	% OPEN

		SUCTION			DISCHARGE																	
STREAM ID	UNIT	1	2		3	FE-2003	4	FE-2006	5	6	FE-2005	7	FV-2005	8								
Design Case																						
Phase		LIQUID	LIQUID		LIQUID		LIQUID		LIQUID	LIQUID		LIQUID		LIQUID								
Vapor Fraction																						
Normal Flow Rate	kg/hr	73,654	27,143		27,143		26,947		26,947	20,939		20,939		20,939								
Over Design	%	10	10		10		10		10	10		10		10								
Rated Flow Rate	kg/hr	81,019	29,858		29,858		29,642		29,642	23,033		23,033		23,033								
Temperature	°C	137.0	137.0		137.0		137.0		137.0	137.0		137.0		137.0								
Pressure @Inlet	kg/cm²G	24.70	24.70		33.46	33.45	33.25	33.25	33.05	33.05	33.05	32.85	32.84	32.28								
Pressure @Destination	kg/cm²G	24.70	24.95		33.45	33.25	33.25	33.05	33.05	33.05	32.85	32.84	32.28	31.53								
Line Size	inch	10	8		6		6		6	4		4		4								
Equivalent Length	M	6.6	42.9		7.7		7.7		7.7	7.3		7.3		65								
Elevation Change	M	0.0	-4.5		0.0		0.0		0.0	0.0		0.0		10								
Fluid, Density	kg/m³	719.9	719.9		719.9		719.9		719.9	721.5		721.5		721.5								
Fluid, Viscosity	cP	0.18	0.18		0.18		0.18		0.18	0.18		0.18		0.18								
Velocity	m/sec	0.61	0.36		0.62		0.61		0.61	1.08		1.08		1.08								
Pres. Drop by Friction	kg/cm²	0.001	0.002		0.001	0.000	0.001	0.000	0.001	0.005	0.000	0.005	0.000	0.048								
Pres. Drop by Gravity	kg/cm²	0.000	-0.320		0.000	0.000	0.000	0.000	0.000	0.000	0.000	0.000	0.000	0.703								
Pressure Drop / 100 M	kg/cm²	0.008	0.004		0.015		0.015		0.015	0.073		0.073		0.073								
Equipment Pres. Drop	kg/cm²		0.07			0.20		0.20			0.20											
CV PRESSURE DROP	kg/cm²												0.56									

LINE IDENTIFICATION		1	2	3	4	5	6	7	8	9	10	11	12	13	14	15	16	17
SIMU. STREAM ID							Path 1			Path 2								
SERVICE				Pump DS									PUMP MIN. FLOW					
TYPE OF FLOW	(L/V/2PH)	LIQUID	LIQUID	LIQUID	LIQUID	LIQUID	LIQUID	LIQUID	LIQUID	LIQUID	LIQUID	LIQUID	LIQUID					
OPERATING CONDITION																		
Temperature	C	137	137	137	137	137	137	137	137	150	150	150	150					
Pressure @up	Kg/cm2.G	24.70	24.70	33.46	33.25	33.05	33.05	32.85	32.00	#REF!	#REF!	30.00	33.19					
Pressure @down	Kg/cm2.G	24.70	25.02	33.45	33.25	33.05	33.05	32.84	31.25	#REF!	#REF!	29.20	32.49					
PIPING INFORMATION																		
Nominal Size	inch	10.0	8.0	6.0	6.0	6.0	4.0	4.0	4.0	3.0	3.0	3.0	3.0					
Schedule or Class	-	40	40	40	40	40	40	40	40	40	40	40	40					
Line length,straight	m	5.0	33.0	5.0	5.0	5.0	5.0	5.0	44.8	5.0	5.0	61.5	38.0					
Eqivalent Length Over Design Factor	-	0.25	0.25	0.50	0.50	0.50	0.50	0.50	0.50	0.50	0.50	0.50	0.50					
Net Elevation Change	m		(4.5)	0.0	0.0	0.0	0.0	0.0	9.8			11.5	9.3					
Equivalent Length	m	6.6	42.9	7.7	7.7	7.7	7.3	7.3	65.1	7.0	7.0	86.6	53.5					
Pipe inside Dia.	m	0.255	0.203	0.154	0.154	0.154	0.102	0.102	0.102	0.078	0.078	0.078	0.078					
Wall Roughness	mm	0.046	0.046	0.046	0.046	0.046	0.046	0.046	0.046	0.046	0.046	0.046	0.046					
LIQUID PHASE CALCULATION																		
Flow Rate	Kg/h	73,654	27,143	27,143	26,947	26,947	20,939	20,939	20,939	5,389	5,389	5,389	13,680					
Flow Rate Design Margin	%	10	10	10	10	10	10	10	10	10	10	10	0					
Density @PT	Kg/m3	719.9	719.9	719.9	719.9	719.9	721.5	721.5	721.5	684.9	684.9	684.9	684.0					
Viscosity @PT	cP	0.180	0.180	0.180	0.180	0.180	0.180	0.180	0.180	0.160	0.160	0.160	0.160					
Surface Tension	dyn/cm																	
Flow Rate, rated	kg/h	81,019	29,858	29,858	29,642	29,642	23,033	23,033	23,033	5,928	5,928	5,928	13,680					
Vol. Flow	m3/hr	112.5	41.5	41.5	41.2	41.2	31.9	31.9	31.9	8.7	8.7	8.7	20.0					
Velocity	m/s	0.61	0.36	0.62	0.61	0.61	1.08	1.08	1.08	0.50	0.50	0.50	1.16					
Reynolds No	-	6.25E+05	2.89E+05	3.81E+05	3.78E+05	3.78E+05	4.43E+05	4.43E+05	4.43E+05	1.68E+05	1.68E+05	1.68E+05	3.88E+05					
Friction Factor	-	0.0149	0.0165	0.0166	0.0166	0.0166	0.0175	0.0175	0.0175	0.0196	0.0196	0.0196	0.0184					
Press. @Out	Kg/cm2.G	24.699	25.018	33.454	33.253	33.052	33.046	32.841	31.249	#REF!	#REF!	29.196	32.494					
Pressure Drop by Friction	Kg/cm2	0.0005	0.002	0.001	0.001	0.001	0.005	0.005	0.048	0.002	0.002	0.019	0.060					
Pressure Drop by Gravity	Kg/cm2	0.000	-0.320	0.000	0.000	0.000	0.000	0.000	0.703	0.000	0.000	0.784	0.636					
Dp / 100 m (by friction)	Kg/cm2	0.0081	0.0038	0.0151	0.0149	0.0149	0.0732	0.0732	0.0732	0.0223	0.0223	0.0223	0.1119					
VAPOR PHASE CALCULATION																		
Flow Rate,max op	Kg/h																	
Flow Rate Design Margin	%																	
Density @PT	Kg/m3																	
or MW	(-)																	
Compr. Z	(-)																	
Viscosity @PT	cP																	
Flow Rate,rated	Kg/h																	
Vol. Flow @in	m3/sec																	
Gas Density @in	Kg/m3																	
Velocity @in	m/s																	
Reynolds No	-																	
Friction Factor	-																	
Gas Dns @Out	Kg/m3																	
Velocity @Out	m/s																	
Mach no. @Out	-																	
Press. @Out	Kg/cm2.G																	
Pressure Drop by Friction	Kg/cm2																	
Pressure Drop by Gravity	Kg/cm2																	
Dp / 100 m (by friction)	Kg/cm2																	

30-P-202A/B

LOTTE E&C 롯데건설주식회사	JOB NO.		PREPD BY:	J.H.Kim	DATE:	Sep. 26 '22	PAGE:	1/2	0
	SERVICE	STRIPPER REFLUX PUMP (PATH1)	CHKD BY:	J.H.Myung	APPD BY:	J.Y.Kim			

*** Result**

1) NPSHA
Datasheet : 3.97 m
Calculation : 3.97 m
-> No Problem

2) Diff. Pressure
Datasheet : 3.57 kg/cm2
Calculation : 3.57 kg/cm2
-> No Problem

3) Line Size
Referece
- Suc. : Velocity : 1.2 ~ 2.4 m/s, ΔP/100m : 0.23 kg/cm2
- Disch. : Velocity : 1.8 ~ 2.4 m/s, ΔP/100m : 0.92 kg/cm2

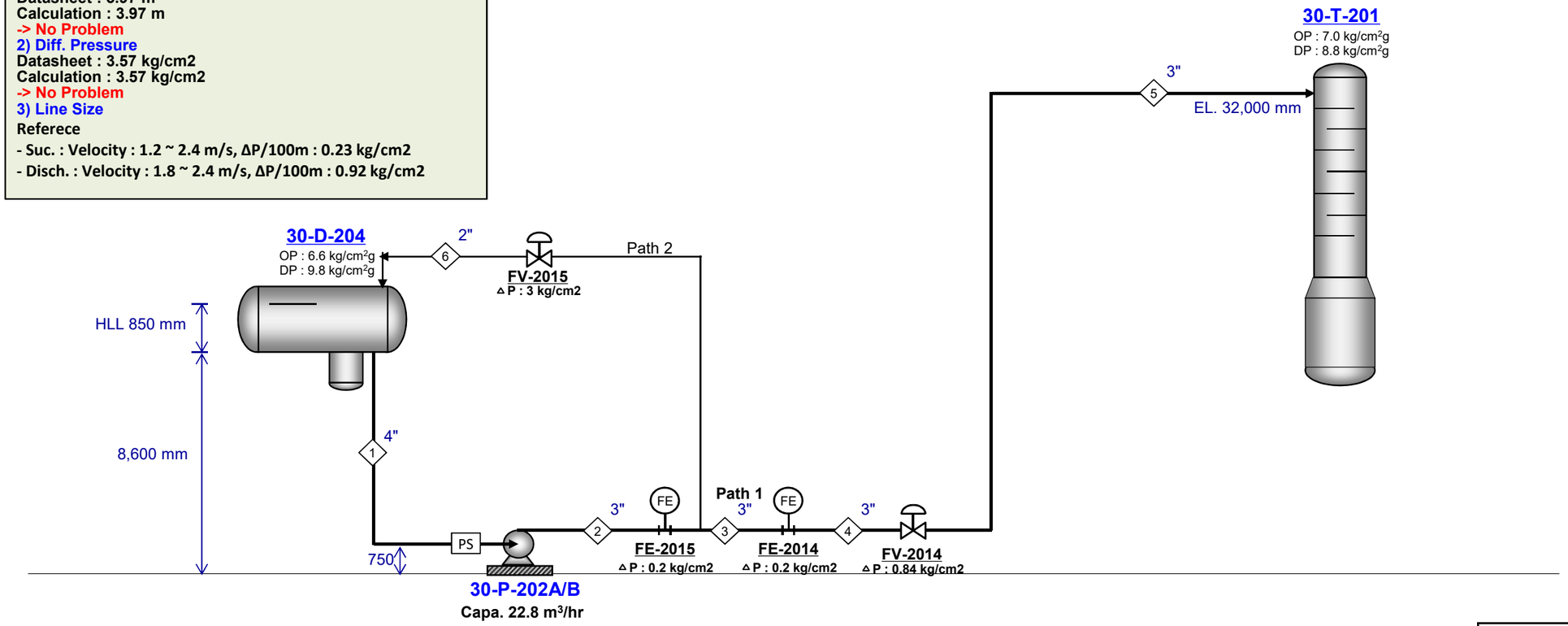

NOTE : 1. Assumed Data as below.
- Permanent Strainer △P = 0.07 kg/cm2, Flow Element △P = 0.2 kg/cm2
- Pump Shaft Level = 0.75 m
- Elevation of 30-D-204 is followed on plot plan base
(Plot Plan : 8.6 m, P&ID : 8.6 m)

CV Input Data		
Item No.		
Des. Cap.		
Density		
D.P		
Char.		

PUMP CALCULATION

ITEM NUMBER	`30-P-202A/B	
SUCTION		
Flow Rate	22.8	m3/hr
Operating Pres.	6.6	kg/cm².G
Design Pres.	9.8	kg/cm².G
Min. Static Head	6	meter
Max. Static Head	6.85	meter
Pump Shaft Level	0.75	meter
Vapor Pres.	7.63	kg/cm².A
Allowance	0	meter
Pipe Friction Loss	0.016	kg/cm²
Strainer	0.07	kg/cm²
Others		kg/cm²
Net Suction Pres.	6.87	kg/cm².G
Max. Suction Pres.	10.21	kg/cm².G
NPSH Available	3.97	meter
DISCHARGE		
Operating Pres.	7	kg/cm².G
Max. Static Head	32.0	meter
Pipe friction Loss	0.108	kg/cm².G
Pipe Gravity Loss	2.087	kg/cm³.G
Equip. Pres. Drop	0.4	kg/cm².G
Control Valves	0.8	kg/cm².G
Others		kg/cm².G
Disch. Press. Req'd	10.44	kg/cm².G
Diff. Pres.	3.57	kg/cm²
Diff. Head (Net)	53	meter
Hydr. Horsepower	2.2	KW
Est. Efficieny		%
Est. BHP		KW
Est. Shut-off Pres.	14.67	kg/cm².G
C.V dp / Friction	165.40	%

CONTROL VALVES

ITEM NO.	CAL. CV	RTD CV	% OPEN

STREAM ID	UNIT	1			2	FE-2015	3	FE-2014	4	FV-2014	5
		SUCTION			DISCHARGE						
Design Case											
Phase		LIQUID			LIQUID		LIQUID		LIQUID		LIQUID
Vapor Fraction											
Normal Flow Rate	kg/hr	12,690			12,690		12,690		12,690		12,690
Over Design	%	20			20		20		20		20
Rated Flow Rate	kg/hr	15,228			15,228		15,228		15,228		15,228
Temperature	°C	43.0			43.0		43.0		43.0		43.0
Pressure @Inlet	kg/cm²G	6.60			10.44	10.42	10.22	10.21	10.01	10.00	9.16
Pressure @Destination	kg/cm²G	6.87			10.42	10.22	10.21	10.01	10.00	9.16	7.00
Line Size	inch	4			3		3		3		3
Equivalent Length	M	43.0			7.0		7.0		7.0		53.7
Elevation Change	M	-5.3			0.0		0.0		0.0		31.3
Fluid, Density	kg/m³	667.9			667.9		667.9		667.9		667.9
Fluid, Viscosity	cP	0.23			0.23		0.23		0.23		0.23
Velocity	m/sec	0.77			1.33		1.33		1.33		1.33
Pres. Drop by Friction	kg/cm²	0.016			0.010	0.000	0.010	0.000	0.010	0.000	0.077
Pres. Drop by Gravity	kg/cm²	-0.351			0.000	0.000	0.000	0.000	0.000	0.000	2.087
Pressure Drop / 100 M	kg/cm²	0.036			0.144		0.144		0.144		0.144
Equipment Pres. Drop	kg/cm²	0.07				0.20		0.20			
CV PRESSURE DROP	kg/cm²									0.84	

LOTTE E&C 롯데건설주식회사	JOB NO.		PREPD BY: J.H.Kim	DATE: Sep. 26 '22	PAGE: 2/2	0
	SERVICE	STRIPPER REFLUX PUMP (PATH2)	CHKD BY: J.H.Myung	APPD BY: J.Y.Kim		

*** Result**

1) NPSHA
Datasheet : 3.97 m
Calculation : 4.18 m
-> No Problem

2) Diff. Pressure
Datasheet : 3.57 kg/cm2
Calculation : 3.56 kg/cm2
-> No Problem

3) Line Size
Referece
- Suc. : Velocity : 1.2 ~ 2.4 m/s, ΔP/100m : 0.23 kg/cm2
- Disch. : Velocity : 1.8 ~ 2.4 m/s, ΔP/100m : 0.92 kg/cm2

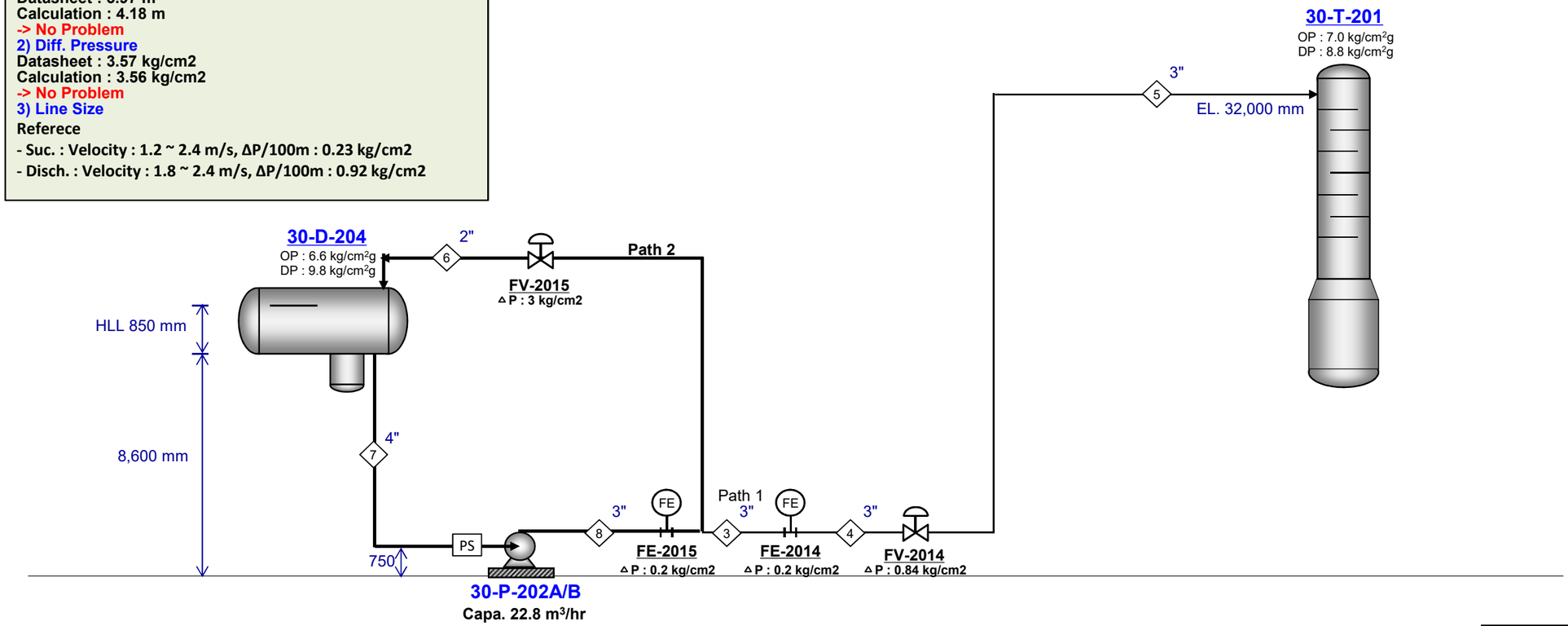

NOTE : 1. Assumed Data as below.
- Permanent Strainer △P = 0.07 kg/cm2, Flow Element △P = 0.2 kg/cm2
- Pump Shaft Level = 0.75 m
- Elevation of 30-D-204 is followed on plot plan base
(Plot Plan : 8.6 m, P&ID : 8.6 m)

CV Input Data		
Item No.		
Des. Cap.		
Density		
D.P		
Char.		

PUMP CALCULATION

ITEM NUMBER	`30-P-202A/B	
SUCTION		
Flow Rate	22.8	m3/hr
Operating Pres.	6.6	kg/cm².G
Design Pres.	9.8	kg/cm².G
Min. Static Head	6	meter
Max. Static Head	6.85	meter
Pump Shaft Level	0.75	meter
Vapor Pres.	7.63	kg/cm².A
Allowance	0	meter
Pipe Friction Loss	0.001	kg/cm²
Strainer	0.07	kg/cm²
Others		kg/cm²
Net Suction Pres.	6.88	kg/cm².G
Max. Suction Pres.	10.21	kg/cm².G
NPSH Available	4.18	meter
DISCHARGE		
Operating Pres.	6.6	kg/cm².G
Max. Static Head	9.8	meter
Pipe friction Loss	0.040	kg/cm².G
Pipe Gravity Loss	0.604	kg/cm³.G
Equip. Pres. Drop	0.2	kg/cm².G
Control Valves	3.0	kg/cm².G
Others		kg/cm².G
Disch. Press. Req'd	10.44	kg/cm².G
Diff. Pres.	3.56	kg/cm²
Diff. Head (Net)	53	meter
Hydr. Horsepower	0.6	KW
Est. Efficieny		%
Est. BHP		KW
Est. Shut-off Pres.	14.66	kg/cm².G
C.V dp / Friction	1251.03	%

CONTROL VALVES

ITEM NO.	CAL. CV	RTD CV	% OPEN

		SUCTION			DISCHARGE																	
STREAM ID	UNIT	7			8	FE-2015	FV-2015	6														
Design Case																						
Phase		LIQUID			LIQUID			LIQUID														
Vapor Fraction																						
Normal Flow Rate	kg/hr	4,007			4,007			4,007														
Over Design	%	0			0			0														
Rated Flow Rate	kg/hr	4,007			4,007			4,007														
Temperature	°C	43.0			43.0			43.0														
Pressure @Inlet	kg/cm²G	6.60			10.44	10.44	10.24	7.24														
Pressure @Destination	kg/cm²G	6.88			10.44	10.24	7.24	6.60														
Line Size	inch	4			3			2														
Equivalent Length	M	43.0			7.0			47.4														
Elevation Change	M	-5.3			0.0			9.1														
Fluid, Density	kg/m³	667.9			667.9			667.9														
Fluid, Viscosity	cP	0.23			0.23			0.23														
Velocity	m/sec	0.20			0.35			0.77														
Pres. Drop by Friction	kg/cm²	0.001			0.001	0.000	0.000	0.039														
Pres. Drop by Gravity	kg/cm²	-0.351			0.000	0.000	0.000	0.604														
Pressure Drop / 100 M	kg/cm²	0.003			0.011			0.082														
Equipment Pres. Drop	kg/cm²	0.07				0.20																
CV PRESSURE DROP	kg/cm²						3.00															

LINE IDENTIFICATION		1	2	3	4	5	6	7	8	9	10	11	12	13	14	15	16	17
SIMU. STREAM ID																		
SERVICE			Pump DS				PUMP MIN. FLOW											
TYPE OF FLOW	(L/V/2PH)	LIQUID	LIQUID	LIQUID	LIQUID	LIQUID	LIQUID	LIQUID	LIQUID							6.6		
OPERATING CONDITION																		
Temperature	C	43	43	43	43	43	43	43	43									
Pressure @up	Kg/cm2.G	6.60	10.44	10.22	10.01	9.16												
Pressure @down	Kg/cm2.G	6.94	10.42	10.21	10.00	7.00	-0.64	0.35	0.00									
PIPING INFORMATION																7.63		
Nominal Size	inch	4.0	3.0	3.0	3.0	3.0	2.0	4.0	3.0									
Schedule or Class	-	40	40	40	40	40	40	40	40									
Line length,straight	m	35.0	5.0	5.0	5.0	38.2	35.0	35.0	5.0									
Eqivalent Length Over Design Factor	-	0.25	0.50	0.50	0.50	0.50	0.50	0.25	0.50									
Net Elevation Change	m	(5.3)				31.3	9.1	(5.3)										
Equivalent Length	m	43.0	7.0	7.0	7.0	53.7	47.4	43.0	7.0									
Pipe inside Dia.	m	0.102	0.078	0.078	0.078	0.078	0.053	0.102	0.078									
Wall Roughness	mm	0.046	0.046	0.046	0.046	0.046	0.046	0.046	0.046									
LIQUID PHASE CALCULATION																		
Flow Rate	Kg/h	12,690	12,690	12,690	12,690	12,690	4,007	4,007	4,007									
Flow Rate Design Margin	%	20	20	20	20	20	0	0	0									
Density @PT	Kg/m3	667.9	667.9	667.9	667.9	667.9	667.9	667.9	667.9									
Viscosity @PT	cP	0.230	0.230	0.230	0.230	0.230	0.230	0.230	0.230									
Surface Tension	dyn/cm																	
Flow Rate, rated	kg/h	15,228	15,228	15,228	15,228	15,228	4,007	4,007	4,007									
Vol. Flow	m3/hr	22.8	22.8	22.8	22.8	22.8	6.0	6.0	6.0									
Velocity	m/s	0.77	1.33	1.33	1.33	1.33	0.77	0.20	0.35									
Reynolds No	-	2.29E+05	3.00E+05	3.00E+05	3.00E+05	3.00E+05	1.17E+05	6.03E+04	7.91E+04									
Friction Factor	-	0.0183	0.0187	0.0187	0.0187	0.0187	0.0214	0.0217	0.0213									
Press. @Out	Kg/cm2.G	6.935	10.425	10.215	10.005	7.000	-0.643	0.349	-0.001									
Pressure Drop by Friction	Kg/cm2	0.0156	0.010	0.010	0.010	0.077	0.039	0.001	0.001									
Pressure Drop by Gravity	Kg/cm2	-0.351	0.000	0.000	0.000	2.087	0.604	-0.351	0.000									
Dp / 100 m (by friction)	Kg/cm2	0.0363	0.1441	0.1441	0.1441	0.1441	0.0823	0.0030	0.0114									
VAPOR PHASE CALCULATION																		
Flow Rate,max op	Kg/h																	
Flow Rate Design Margin	%																	
Density @PT	Kg/m3																	
or MW	(-)																	
Compr. Z	(-)																	
Viscosity @PT	cP																	
Flow Rate,rated	Kg/h																	
Vol. Flow @in	m3/sec																	
Gas Density @in	Kg/m3																	
Velocity @in	m/s																	
Reynolds No	-																	
Friction Factor	-																	
Gas Dns @Out	Kg/m3																	
Velocity @Out	m/s																	
Mach no. @Out	-																	
Press. @Out	Kg/cm2.G																	
Pressure Drop by Friction	Kg/cm2																	
Pressure Drop by Gravity	Kg/cm2																	
Dp / 100 m (by friction)	Kg/cm2																	

LOTTE E&C 롯데건설주식회사	JOB NO.		PREPD BY: J.H.Kim	DATE: Sep. 26 '22	PAGE: 1/1	0
	SERVICE	STRIPPER REFLUX PUMP (PATH1)	CHKD BY: J.H.Myung	APPD BY: J.Y.Kim		

*** Result**

1) NPSHA
Datasheet : 3.97 m
Calculation : 3.95 m
-> No Problem

2) Diff. Pressure
Datasheet : 3.57 kg/cm2
Calculation : 3.37 kg/cm2
-> No Problem

3) Line Size
Referece
- Suc. : Velocity : 1.2 ~ 2.4 m/s, ΔP/100m : 0.23 kg/cm2
- Disch. : Velocity : 1.8 ~ 2.4 m/s, ΔP/100m : 1.38 kg/cm2

CASE B EOR

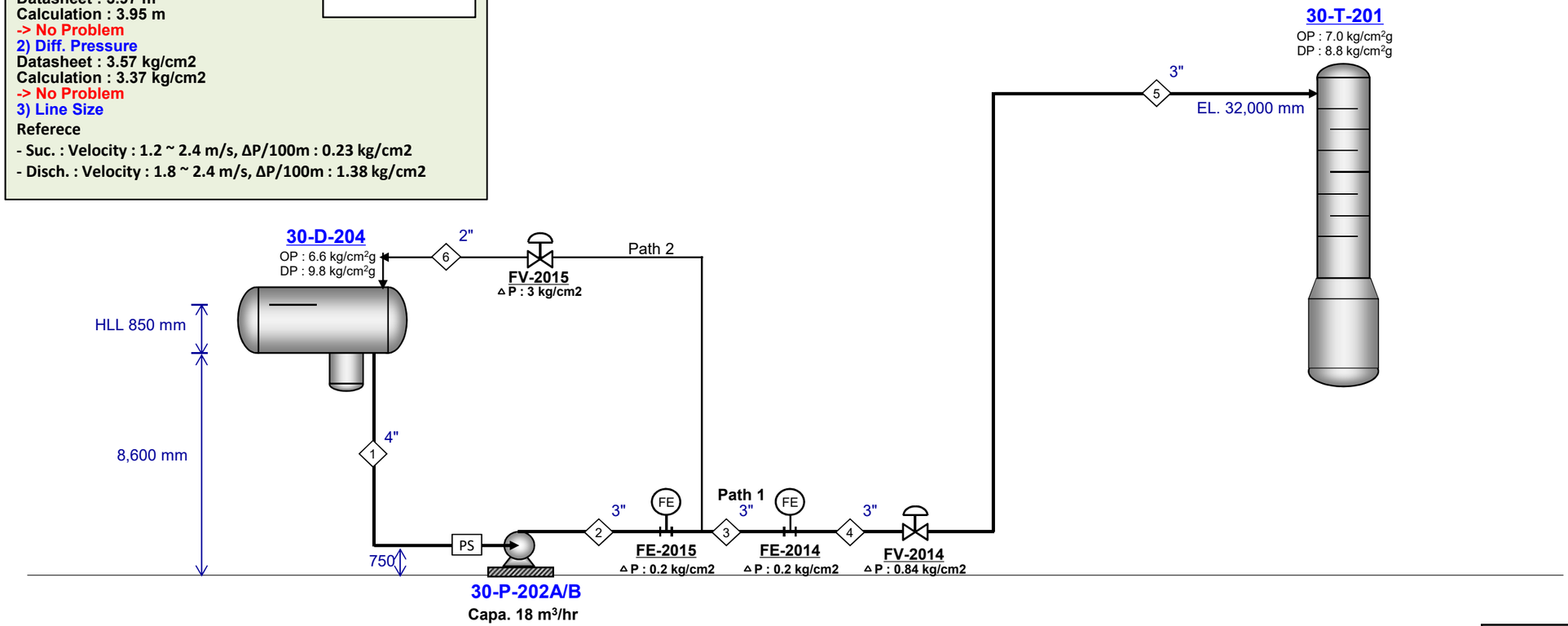

NOTE : 1. Assumed Data as below.
- Permanent Strainer △P = 0.07 kg/cm2, Flow Element △P = 0.2 kg/cm2
- Pump Shaft Level = 0.75 m
- Elevation of 30-D-204 is followed on plot plan base
(Plot Plan : 8.6 m, P&ID : 8.6 m)

CV Input Data		
Item No.		
Des. Cap.		
Density		
D.P		
Char.		

PUMP CALCULATION

ITEM NUMBER	`30-P-202A/B	
SUCTION		
Flow Rate	18.0	m3/hr
Operating Pres.	6.6	kg/cm².G
Design Pres.	9.8	kg/cm².G
Min. Static Head	6	meter
Max. Static Head	6.85	meter
Pump Shaft Level	0.75	meter
Vapor Pres.	7.63	kg/cm².A
Allowance	0	meter
Pipe Friction Loss	0.009	kg/cm²
Strainer	0.07	kg/cm²
Others		kg/cm²
Net Suction Pres.	6.84	kg/cm².G
Max. Suction Pres.	10.17	kg/cm².G
NPSH Available	3.95	meter
DISCHARGE		
Operating Pres.	7	kg/cm².G
Max. Static Head	32.0	meter
Pipe friction Loss	0.062	kg/cm².G
Pipe Gravity Loss	1.905	kg/cm³.G
Equip. Pres. Drop	0.4	kg/cm².G
Control Valves	0.8	kg/cm².G
Others		kg/cm².G
Disch. Press. Req'd	10.21	kg/cm².G
Diff. Pres.	3.37	kg/cm²
Diff. Head (Net)	55	meter
Hydr. Horsepower	1.7	KW
Est. Efficieny		%
Est. BHP		KW
Est. Shut-off Pres.	14.38	kg/cm².G
C.V dp / Friction	181.76	%

CONTROL VALVES

ITEM NO.	CAL. CV	RTD CV	% OPEN

STREAM ID	UNIT	SUCTION 1			DISCHARGE 2	FE-2015	3	FE-2014	4	FV-2014	5
Design Case											
Phase		LIQUID			LIQUID		LIQUID		LIQUID		LIQUID
Vapor Fraction											
Normal Flow Rate	kg/hr	9,160			9,160		9,160		9,160		9,160
Over Design	%	20			20		20		20		20
Rated Flow Rate	kg/hr	10,992			10,992		10,992		10,992		10,992
Temperature	°C	43.0			43.0		43.0		43.0		43.0
Pressure @Inlet	kg/cm²G	6.60			10.21	10.20	10.00	10.00	9.80	9.79	8.95
Pressure @Destination	kg/cm²G	6.84			10.20	10.00	10.00	9.80	9.79	8.95	7.00
Line Size	inch	4			3		3		3		3
Equivalent Length	M	43.0			7.0		7.0		7.0		53.7
Elevation Change	M	-5.3			0.0		0.0		0.0		31.3
Fluid, Density	kg/m³	609.5			609.5		609.5		609.5		609.5
Fluid, Viscosity	cP	0.19			0.19		0.19		0.19		0.19
Velocity	m/sec	0.61			1.05		1.05		1.05		1.05
Pres. Drop by Friction	kg/cm²	0.009			0.006	0.000	0.006	0.000	0.006	0.000	0.045
Pres. Drop by Gravity	kg/cm²	-0.320			0.000	0.000	0.000	0.000	0.000	0.000	1.905
Pressure Drop / 100 M	kg/cm²	0.021			0.083		0.083		0.083		0.083
Equipment Pres. Drop	kg/cm²	0.07				0.20		0.20			
CV PRESSURE DROP	kg/cm²									0.84	

LINE IDENTIFICATION		1	2	3	4	5	6	7	8	9	10	11	12	13	14	15	16	17
SIMU. STREAM ID																		
SERVICE			Pump DS															
TYPE OF FLOW	(L/V/2PH)	LIQUID	LIQUID	LIQUID	LIQUID	LIQUID										6.6		
OPERATING CONDITION																		
Temperature	C	43	43	43	43	43												
Pressure @up	Kg/cm2.G	6.60	10.21	10.00	9.80	8.95												
Pressure @down	Kg/cm2.G	6.91	10.20	10.00	9.79	7.00												
PIPING INFORMATION																7.63		
Nominal Size	inch	4.0	3.0	3.0	3.0	3.0												
Schedule or Class	-	40	40	40	40	40												
Line length,straight	m	35.0	5.0	5.0	5.0	38.2												
Eqivalent Length Over Design Factor	-	0.25	0.50	0.50	0.50	0.50												
Net Elevation Change	m	(5.3)				31.3												
Equivalent Length	m	43.0	7.0	7.0	7.0	53.7												
Pipe inside Dia.	m	0.102	0.078	0.078	0.078	0.078												
Wall Roughness	mm	0.046	0.046	0.046	0.046	0.046												
LIQUID PHASE CALCULATION																		
Flow Rate	Kg/h	9,160	9,160	9,160	9,160	9,160												
Flow Rate Design Margin	%	20	20	20	20	20												
Density @PT	Kg/m3	609.5	609.5	609.5	609.5	609.5												
Viscosity @PT	cP	0.190	0.190	0.190	0.190	0.190												
Surface Tension	dyn/cm																	
Flow Rate, rated	kg/h	10,992	10,992	10,992	10,992	10,992												
Vol. Flow	m3/hr	18.0	18.0	18.0	18.0	18.0												
Velocity	m/s	0.61	1.05	1.05	1.05	1.05												
Reynolds No	-	2.00E+05	2.63E+05	2.63E+05	2.63E+05	2.63E+05												
Friction Factor	-	0.0185	0.0189	0.0189	0.0189	0.0189												
Press. @Out	Kg/cm2.G	6.911	10.201	9.995	9.789	7.000												
Pressure Drop by Friction	Kg/cm2	0.0090	0.006	0.006	0.006	0.045												
Pressure Drop by Gravity	Kg/cm2	-0.320	0.000	0.000	0.000	1.905												
Dp / 100 m (by friction)	Kg/cm2	0.0210	0.0830	0.0830	0.0830	0.0830												
VAPOR PHASE CALCULATION																		
Flow Rate,max op	Kg/h																	
Flow Rate Design Margin	%																	
Density @PT	Kg/m3																	
or MW	(-)																	
Compr. Z	(-)																	
Viscosity @PT	cP																	
Flow Rate,rated	Kg/h																	
Vol. Flow @in	m3/sec																	
Gas Density @in	Kg/m3																	
Velocity @in	m/s																	
Reynolds No	-																	
Friction Factor	-																	
Gas Dns @Out	Kg/m3																	
Velocity @Out	m/s																	
Mach no. @Out	-																	
Press. @Out	Kg/cm2.G																	
Pressure Drop by Friction	Kg/cm2																	
Pressure Drop by Gravity	Kg/cm2																	
Dp / 100 m (by friction)	Kg/cm2																	

30-P-301A/B

LOTTE E&C 롯데건설주식회사

JOB NO.		PREPD BY:	J.H.Kim	DATE:	Sep. 26 '22	PAGE:	1 / 4	0
SERVICE	Deheptanizer Reflux Pump (Path 1)	CHKD BY:	J.H.Myung	APPD BY:	J.Y.Kim			

*** Result**

1) Diff. Pressure

Datasheet : 6.16 kg/cm2
PATH1 Calculation : 6.16 kg/cm2
-> No problem

2) Line Size

Reference
- Suc. : Velocity : 1.2 ~ 2.4 m/s, ΔP/100m : 0.23 kg/cm2
- Disch. : Velocity : 2.4 ~ 3.0 m/s, ΔP/100m : 0.92 kg/cm2

PATH1 Calculation :
-> No problem

PATH 1

GOVERNING

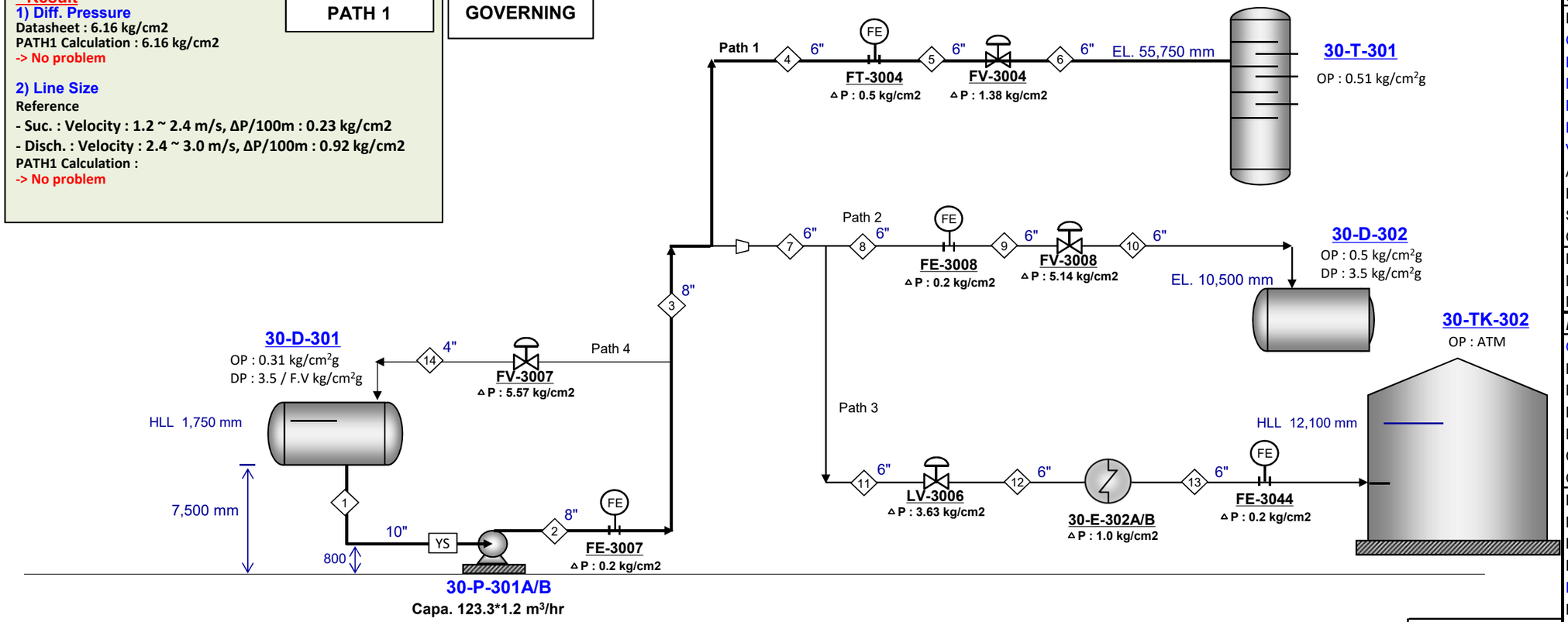

NOTE : 1. Assumed Data as below.
- Strainer △P = 0.07 kg/cm2
- Flowmeter △P = 0.2 kg/cm2

2. Rated capacity is designed according to the licensor datasheet

CV Input Data		
Item No.		
Des. Cap.		
Density		
D.P		
Char.		

PUMP CALCULATION

ITEM NUMBER	30-P-301A/B	
SUCTION		
Flow Rate	148.0	m3/hr
Operating Pres.	0.31	kg/cm².G
Design Pres.	3.5	kg/cm².G
Min. Static Head	7.5	meter
Max. Static Head	9.25	meter
Pump Shaft Level	0.8	meter
Vapor Pres.	1.001	kg/cm².A
Allowance	0	meter
Pipe Friction Loss	0.006	kg/cm²
Strainer	0.07	kg/cm²
Others		kg/cm²
Net Suction Pres.	0.76	kg/cm².G
Max. Suction Pres.	4.16	kg/cm².G
NPSH Available	10.12	meter
DISCHARGE		
Operating Pres.	0.51	kg/cm².G
Max. Static Head	55.8	meter
Pipe friction Loss	0.049	kg/cm².G
Pipe Gravity Loss	4.275	kg/cm³.G
Equip. Pres. Drop	0.7	kg/cm².G
Control Valves	1.4	kg/cm².G
Others		kg/cm².G
Disch. Press. Req'd	6.91	kg/cm².G
Diff. Pres.	6.16	kg/cm²
Diff. Head (Net)	79	meter
Hydr. Horsepower	24.8	KW
Est. Efficieny		%
Est. BHP		KW
Est. Shut-off Pres.	11.86	kg/cm².G
C.V dp / Friction	184.21	%

CONTROL VALVES

ITEM NO.	CAL. CV	RTD CV	% OPEN

		SUCTION			DISCHARGE																	
STREAM ID	UNIT	1			2	FE-3007	3	4	FE-3004	5	FV-3004	6										
Design Case																						
Phase		LIQUID			LIQUID		LIQUID	LIQUID		LIQUID		LIQUID										
Vapor Fraction																						
Normal Flow Rate	kg/hr	95,927			95,927		95,927	37,796		37,796		37,796										
Over Design	%	20			20		20	20		20		20										
Rated Flow Rate	kg/hr	115,113			115,113		115,113	45,355		45,355		45,355										
Temperature	°C	79.0			79.0		79.0	79.0		79.0		79.0										
Pressure @Inlet	kg/cm²G	0.31			6.91	6.91	6.71	6.70	6.70	6.20	6.20	4.82										
Pressure @Destination	kg/cm²G	0.76			6.91	6.71	6.70	6.70	6.20	6.20	4.82	0.51										
Line Size	inch	10			8		8	6		6		6										
Equivalent Length	M	39.8			8.0		16.0	15.3		7.7		92.0										
Elevation Change	M	-6.7			0.0		0.0	0.0		0.0		55.0										
Fluid, Density	kg/m³	778.0			778.0		778.0	778.0		778.0		778.0										
Fluid, Viscosity	cP	0.306			0.306		0.306	0.306		0.306		0.306										
Velocity	m/sec	0.81			1.27		1.27	0.87		0.87		0.87										
Pres. Drop by Friction	kg/cm²	0.006			0.004	0.000	0.008	0.005	0.000	0.002	0.000	0.030										
Pres. Drop by Gravity	kg/cm²	-0.521			0.000	0.000	0.000	0.000	0.000	0.000	0.000	4.275										
Pressure Drop / 100 M	kg/cm²	0.015			0.049		0.049	0.033		0.033		0.033										
Equipment Pres. Drop	kg/cm²	0.07				0.20			0.50													
CV PRESSURE DROP	kg/cm²										1.38											

LOTTE E&C 롯데건설주식회사	JOB NO.		PREPD BY:	J.H.Kim	DATE:	Sep. 26 '22	PAGE:	2 / 4	0
	SERVICE	Deheptanizer Reflux Pump (Path 2)	CHKD BY:	J.H.Myung	APPD BY:	J.Y.Kim			

*** Result**

PATH 2

1) Diff. Pressure

Datasheet : 6.16 kg/cm2
PATH2 Calculation : 6.15 kg/cm2
-> No problem

2) Line Size

Reference
- Suc. : Velocity : 1.2 ~ 2.4 m/s, ΔP/100m : 0.23 kg/cm2
- Disch. : Velocity : 2.4 ~ 3.0 m/s, ΔP/100m : 0.92 kg/cm2

PATH2 Calculation :
-> No problem

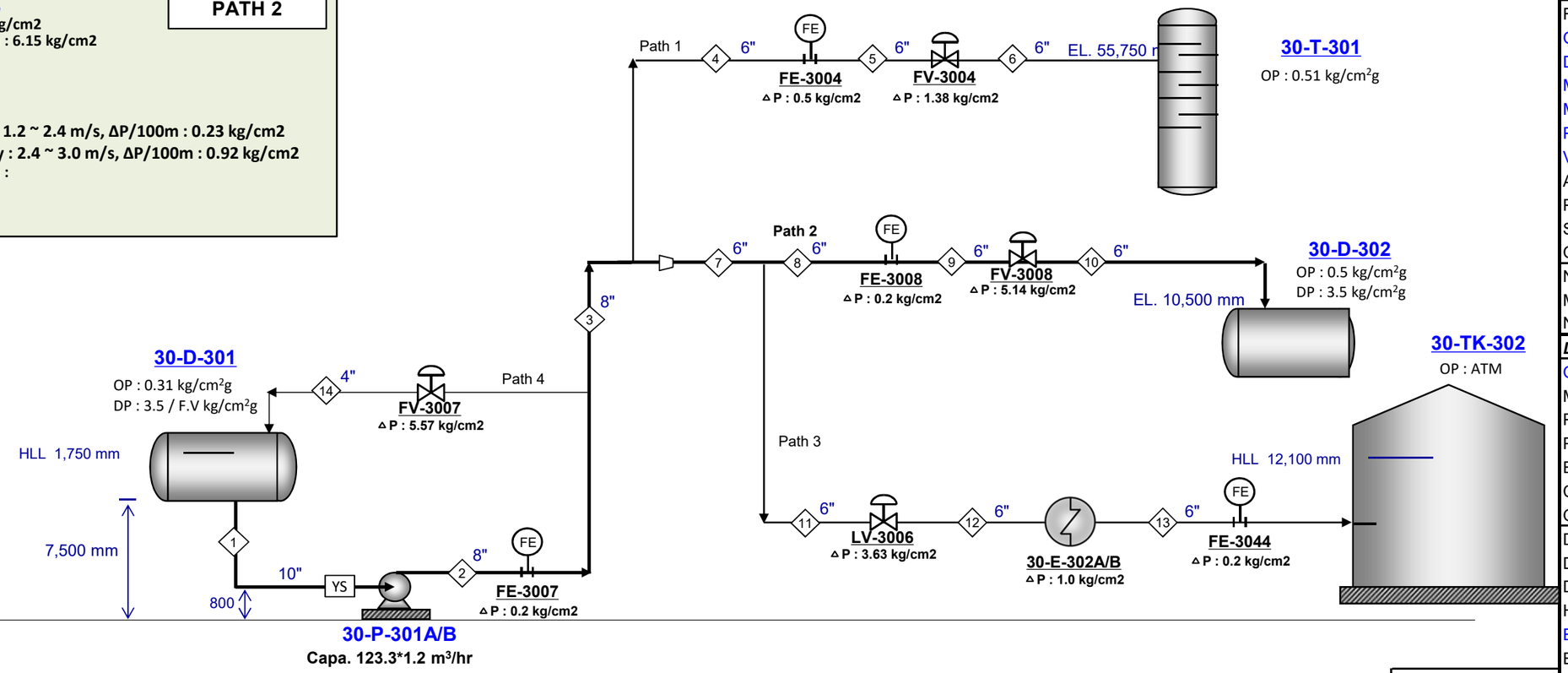

NOTE : 1. Assumed Data as below.
- Strainer △P = 0.07 kg/cm2
- Flowmeter △P = 0.2 kg/cm2

2. Rated capacity is designed according to the licensor datasheet

CV Input Data		
Item No.		
Des. Cap.		
Density		
D.P		
Char.		

PUMP CALCULATION

ITEM NUMBER	30-P-301A/B	
SUCTION		
Flow Rate	148.0	m3/hr
Operating Pres.	0.31	kg/cm².G
Design Pres.	3.5	kg/cm².G
Min. Static Head	7.5	meter
Max. Static Head	9.25	meter
Pump Shaft Level	0.8	meter
Vapor Pres.	1.001	kg/cm².A
Allowance	0	meter
Pipe Friction Loss	0.006	kg/cm²
Strainer	0.07	kg/cm²
Others		kg/cm²
Net Suction Pres.	0.76	kg/cm².G
Max. Suction Pres.	4.16	kg/cm².G
NPSH Available	10.12	meter
DISCHARGE		
Operating Pres.	0.5	kg/cm².G
Max. Static Head	10.5	meter
Pipe friction Loss	0.112	kg/cm².G
Pipe Gravity Loss	0.755	kg/cm³.G
Equip. Pres. Drop	0.4	kg/cm².G
Control Valves	5.1	kg/cm².G
Others		kg/cm².G
Disch. Press. Req'd	6.91	kg/cm².G
Diff. Pres.	6.15	kg/cm²
Diff. Head (Net)	79	meter
Hydr. Horsepower	24.8	KW
Est. Efficieny		%
Est. BHP		KW
Est. Shut-off Pres.	11.85	kg/cm².G
C.V dp / Friction	1003.81	%

CONTROL VALVES

ITEM NO.	CAL. CV	RTD CV	% OPEN

		SUCTION			DISCHARGE																	
STREAM ID	UNIT	1			2	FE-3007	3	7	8	FE-3008	9	FV-3008	10									
Design Case																						
Phase		LIQUID			LIQUID		LIQUID	LIQUID	LIQUID		LIQUID		LIQUID									
Vapor Fraction																						
Normal Flow Rate	kg/hr	95,927			95,927		95,927	74,014	74,014		74,014		74,014									
Over Design	%	20			20		20	20	20		20		20									
Rated Flow Rate	kg/hr	115,113			115,113		115,113	88,816	88,816		88,816		88,816									
Temperature	°C	79.0			79.0		79.0	79.0	79.0		79.0		79.0									
Pressure @Inlet	kg/cm²G	0.31			6.91	6.90	6.70	6.70	6.67	6.65	6.45	6.44	1.30									
Pressure @Destination	kg/cm²G	0.76			6.90	6.70	6.70	6.67	6.65	6.45	6.44	1.30	0.50									
Line Size	inch	10			8		8	6	6		6		6									
Equivalent Length	M	39.8			8.0		16.0	23.0	15.3		7.7		38									
Elevation Change	M	-6.7			0.0		0.0	0.0	0.0		0.0		9.7									
Fluid, Density	kg/m³	778.0			778.0		778.0	778.0	778.0		778.0		778.0									
Fluid, Viscosity	cP	0.306			0.306		0.306	0.306	0.306		0.306		0.306									
Velocity	m/sec	0.81			1.27		1.27	1.70	1.70		1.70		1.70									
Pres. Drop by Friction	kg/cm²	0.006			0.004	0.000	0.008	0.027	0.018	0.000	0.009	0.000	0.046									
Pres. Drop by Gravity	kg/cm²	-0.521			0.000	0.000	0.000	0.000	0.000	0.000	0.000	0.000	0.755									
Pressure Drop / 100 M	kg/cm²	0.015			0.049		0.049	0.119	0.119		0.119		0.119									
Equipment Pres. Drop	kg/cm²	0.07				0.20				0.20												
CV PRESSURE DROP	kg/cm²											5.14										

LOTTE E&C 롯데건설주식회사	JOB NO.		PREPD BY: J.H.Kim	DATE: Sep. 26 '22	PAGE: 3 / 4	0
	SERVICE	Deheptanizer Reflux Pump (Path 3)	CHKD BY: J.H.Myung	APPD BY: J.Y.Kim		

*** Result**

PATH 3

1) Diff. Pressure

Datasheet : 6.16 kg/cm2
PATH3 Calculation : 6.15 kg/cm2
-> No problem

2) Line Size

Reference
- Suc. : Velocity : 1.2 ~ 2.4 m/s, ΔP/100m : 0.23 kg/cm2
- Disch. : Velocity : 2.4 ~ 3.0 m/s, ΔP/100m : 0.92 kg/cm2

PATH3 Calculation :
-> No problem

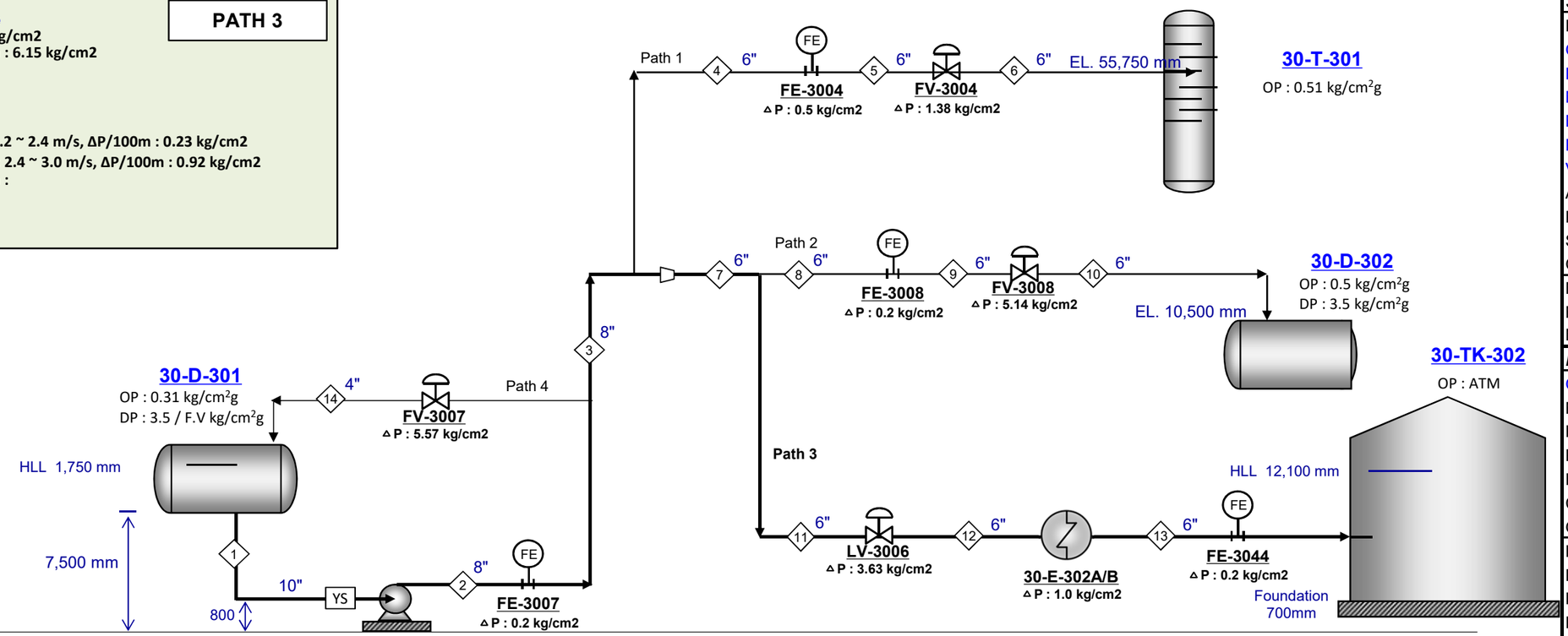

NOTE : 1. Assumed Data as below.
- Strainer △P = 0.07 kg/cm2
- Flowmeter △P = 0.2 kg/cm2

2. Rated capacity is designed according to the licensor datasheet

CV Input Data		
Item No.		
Des. Cap.		
Density		
D.P		
Char.		

PUMP CALCULATION

ITEM NUMBER	30-P-301A/B	
SUCTION		
Flow Rate	148.0	m3/hr
Operating Pres.	0.31	kg/cm².G
Design Pres.	3.5	kg/cm².G
Min. Static Head	7.5	meter
Max. Static Head	9.25	meter
Pump Shaft Level	0.8	meter
Vapor Pres.	1.001	kg/cm².A
Allowance	0	meter
Pipe Friction Loss	0.006	kg/cm²
Strainer	0.07	kg/cm²
Others		kg/cm²
Net Suction Pres.	0.76	kg/cm².G
Max. Suction Pres.	4.16	kg/cm².G
NPSH Available	10.12	meter
DISCHARGE		
Operating Pres.	ATM	kg/cm².G
Max. Static Head	12.8	meter
Pipe friction Loss	0.398	kg/cm².G
Pipe Gravity Loss	0.979	kg/cm³.G
Equip. Pres. Drop	1.4	kg/cm².G
Control Valves	3.6	kg/cm².G
Others	0.5	kg/cm².G
Disch. Press. Req'd	6.91	kg/cm².G
Diff. Pres.	6.15	kg/cm²
Diff. Head (Net)	79	meter
Hydr. Horsepower	24.8	KW
Est. Efficieny		%
Est. BHP		KW
Est. Shut-off Pres.	11.85	kg/cm².G
C.V dp / Friction	157.98	%

CONTROL VALVES

ITEM NO.	CAL. CV	RTD CV	% OPEN

		SUCTION			DISCHARGE																	
STREAM ID	UNIT	1			2	FE-3007	3	7	11	LV-3006	12	30-E-302A/B	13	FE-3044								
Design Case																						
Phase		LIQUID			LIQUID		LIQUID	LIQUID	LIQUID		LIQUID		LIQUID									
Vapor Fraction																						
Normal Flow Rate	kg/hr	95,927			95,927		95,927	74,014	74,014		74,014		74,014									
Over Design	%	20			20		20	20	20		20		20									
Rated Flow Rate	kg/hr	115,113			115,113		115,113	88,816	88,816		88,816		88,816									
Temperature	°C	79.0			79.0		79.0	79.0	79.0		79.0		40.0									
Pressure @Inlet	kg/cm²G	0.31			6.91	6.90	6.70	6.70	6.67	6.65	3.02	3.00	2.00	0.70								
Pressure @Destination	kg/cm²G	0.76			6.90	6.70	6.70	6.67	6.65	3.02	3.00	2.00	0.70	0.50								
Line Size	inch	10			8		8	6	6		6		6									
Equivalent Length	M	39.8			8.0		16.0	23.0	15.3		15.3		275.9									
Elevation Change	M	-6.7			0.0		0.0	0.0	0.0		0.0		12.0									
Fluid, Density	kg/m³	778.0			778.0		778.0	778.0	778.0		778.0		816.1									
Fluid, Viscosity	cP	0.306			0.306		0.306	0.306	0.306		0.306		0.469									
Velocity	m/sec	0.81			1.27		1.27	1.70	1.70		1.70		1.62									
Pres. Drop by Friction	kg/cm²	0.006			0.004	0.000	0.008	0.027	0.018	0.000	0.018	0.000	0.322	0.000								
Pres. Drop by Gravity	kg/cm²	-0.521			0.000	0.000	0.000	0.000	0.000	0.000	0.000	0.000	0.979	0.000								
Pressure Drop / 100 M	kg/cm²	0.015			0.049		0.049	0.119	0.119		0.119		0.117									
Equipment Pres. Drop	kg/cm²	0.07				0.20						1.00		0.20								
CV PRESSURE DROP	kg/cm²									3.63												

LOTTE E&C 롯데건설주식회사	JOB NO.		PREPD BY: J.H.Kim	DATE: Sep. 26 '22	PAGE: 4 / 4	0
	SERVICE	Deheptanizer Reflux Pump (Path 4)	CHKD BY: J.H.Myung	APPD BY: J.Y.Kim		

*** Result**

PATH 4

1) Diff. Pressure

Datasheet : 6.16 kg/cm2
PATH1 Calculation : 6.15 kg/cm2
-> No problem

2) Line Size

Reference
- Suc. : Velocity : 1.2 ~ 2.4 m/s, ΔP/100m : 0.23 kg/cm2
- Disch. : Velocity : 2.4 ~ 3.0 m/s, ΔP/100m : 0.92 kg/cm2

PATH1 Calculation :
-> No problem

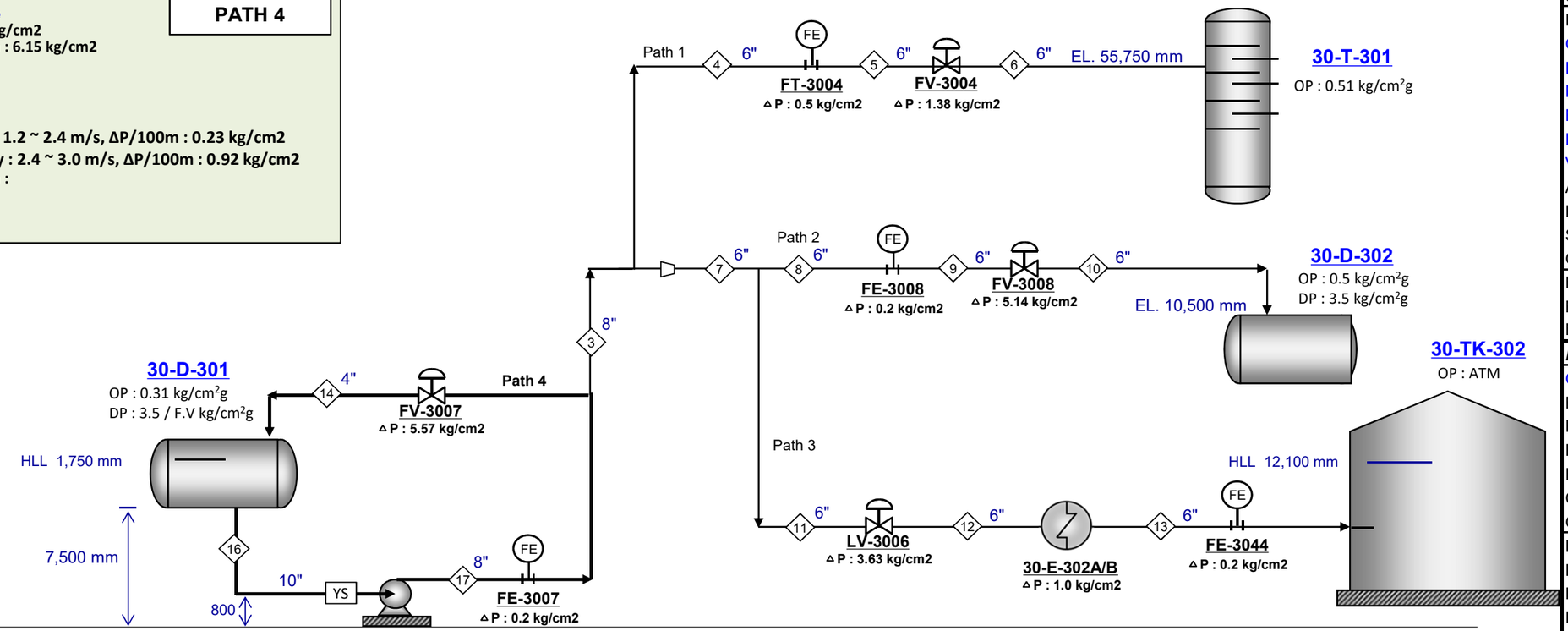

PUMP CALCULATION		
ITEM NUMBER	30-P-301A/B	
SUCTION		
Flow Rate	148.0	m3/hr
Operating Pres.	0.31	kg/cm².G
Design Pres.	3.5	kg/cm².G
Min. Static Head	7.5	meter
Max. Static Head	9.25	meter
Pump Shaft Level	0.8	meter
Vapor Pres.	1.001	kg/cm².A
Allowance	0	meter
Pipe Friction Loss	0.001	kg/cm²
Strainer	0.07	kg/cm²
Others		kg/cm²
Net Suction Pres.	0.76	kg/cm².G
Max. Suction Pres.	4.16	kg/cm².G
NPSH Available	10.18	meter
DISCHARGE		
Operating Pres.	0.31	kg/cm².G
Max. Static Head	10.2	meter
Pipe friction Loss	0.099	kg/cm².G
Pipe Gravity Loss	0.731	kg/cm³.G
Equip. Pres. Drop	0.2	kg/cm².G
Control Valves	5.6	kg/cm².G
Others		kg/cm².G
Disch. Press. Req'd	6.91	kg/cm².G
Diff. Pres.	6.15	kg/cm²
Diff. Head (Net)	79	meter
Hydr. Horsepower	9.0	KW
Est. Efficieny		%
Est. BHP		KW
Est. Shut-off Pres.	11.84	kg/cm².G
C.V dp / Friction	1864.10	%

CV Input Data		
Item No.		
Des. Cap.		
Density		
D.P		
Char.		

CONTROL VALVES			
ITEM NO.	CAL. CV	RTD CV	% OPEN

NOTE : 1. Assumed Data as below.
- Strainer △P = 0.07 kg/cm2
- Flowmeter △P = 0.2 kg/cm2

2. Rated capacity is designed according to the licensor datasheet

		SUCTION			DISCHARGE																	
STREAM ID	UNIT	16			17	FE-3007	FV-3007	14														
Design Case																						
Phase		LIQUID			LIQUID			LIQUID														
Vapor Fraction																						
Normal Flow Rate	kg/hr	42,012			42,012			42,012														
Over Design	%	0			0			0														
Rated Flow Rate	kg/hr	42,012			42,012			42,012														
Temperature	°C	79.0			79.0			79.0														
Pressure @Inlet	kg/cm²G	0.31			6.91	6.91	6.71	1.14														
Pressure @Destination	kg/cm²G	0.76			6.91	6.71	1.14	0.31														
Line Size	inch	10			8			4														
Equivalent Length	M	39.8			8.0			43.7														
Elevation Change	M	-6.7			0.0			9.4														
Fluid, Density	kg/m³	778.0			778.0			778.0														
Fluid, Viscosity	cP	0.306			0.306			0.306														
Velocity	m/sec	0.29			0.46			1.83														
Pres. Drop by Friction	kg/cm²	0.001			0.001	0.000	0.000	0.098														
Pres. Drop by Gravity	kg/cm²	-0.521			0.000	0.000	0.000	0.731														
Pressure Drop / 100 M	kg/cm²	0.002			0.007			0.225														
Equipment Pres. Drop	kg/cm²	0.07				0.20																
CV PRESSURE DROP	kg/cm²						5.57															

LINE IDENTIFICATION		1	2	3	4	5	6	7	8	9	10	11	12	13	14	15	16	17
SIMU. STREAM ID					Path 1				Path 2			Path 3						
SERVICE					Pump DS Clean Cut Case				Pump DS * 77.2%			Path 2 Flowrate			PUMP MIN. FLOW		PUMP MIN. FLOW	PUMP MIN. FLOW
TYPE OF FLOW	(L/V/2PH)	LIQUID	LIQUID	LIQUID	LIQUID	LIQUID	LIQUID	LIQUID	LIQUID	LIQUID	LIQUID	LIQUID	LIQUID	LIQUID	LIQUID	LIQUID	LIQUID	LIQUID
OPERATING CONDITION																		
Temperature	C	79	79	79	79	79	79	79	79	79	79	79	79	40	79	40	79	79
Pressure @up	Kg/cm2.G																	
Pressure @down	Kg/cm2.G	0.52	0.00	-0.01	0.00	0.00	-4.31	-0.03	-0.02	-0.01	-0.80	-0.02	-0.02	-1.30	-0.83	-0.76	0.52	0.00
PIPING INFORMATION																		
Nominal Size	inch	10.0	8.0	8.0	6.0	6.0	6.0	6.0	6.0	6.0	6.0	6.0	6.0	6.0	4.0	6.0	10.0	8.0
Schedule or Class	-	40	40	40	40	40	40	40	40	40	40	40	40	40	40	40	40	40
Line length,straight	m	30.0	5.0	10.0	10.0	5.0	60.0	15.0	10.0	5.0	25.0	10.0	10.0	180.0	30	213.0	30.0	5.0
Eqivalent Length Over Design Factor	-	0.25	0.50	0.50	0.50	0.50	0.50	0.5	0.50	0.50	0.50	0.50	0.5	0.50	0.5	0.50	0.25	0.50
Net Elevation Change	m	(6.7)	0.0	0.0	0.0	0.0	55.0	0.0	0.0	0.0	9.7	0.0	0.0	12.0	9.4	4.7	(6.7)	0.0
Equivalent Length	m	39.8	8.0	16.0	15.3	7.7	92.0	23.0	15.3	7.7	38.3	15.3	15.3	275.9	43.7	326.5	39.8	8.0
Pipe inside Dia.	m	0.255	0.203	0.203	0.154	0.154	0.154	0.154	0.154	0.154	0.154	0.154	0.154	0.154	0.102	0.154	0.255	0.203
Wall Roughness	mm	0.046	0.046	0.046	0.046	0.046	0.046	0.046	0.046	0.046	0.046	0.046	0.046	0.046	0.046	0.046	0.046	0.046
LIQUID PHASE CALCULATION																		
Flow Rate	Kg/h	95,927	95,927	95,927	37,796	37,796	37,796	74,014	74,014	74,014	74,014	74,014	74,014	74,014	42,012	74,014	42,012	42,012
Flow Rate Design Margin	%	20	20	20	20	20	20	20	20	20	20	20	20	20	0	20	0	0
Density @PT	Kg/m3	778.0	778.0	778.0	778.0	778.0	778.0	778.0	778.0	778.0	778.0	778.0	778.0	816.1	778.0	816.1	778.0	778.0
Viscosity @PT	cP	0.306	0.306	0.306	0.306	0.306	0.306	0.306	0.306	0.306	0.306	0.306	0.306	0.469	0.306	0.469	0.306	0.306
Surface Tension	dyn/cm																	
Flow Rate, rated	kg/h	115,113	115,113	115,113	45,355	45,355	45,355	88,816	88,816	88,816	88,816	88,816	88,816	88,816	42,012	88,816	42,012	42,012
Vol. Flow	m3/hr	148.0	148.0	148.0	58.3	58.3	58.3	114.2	114.2	114.2	114.2	114.2	114.2	108.8	54.0	108.8	54.0	54.0
Velocity	m/s	0.81	1.27	1.27	0.87	0.87	0.87	1.70	1.70	1.70	1.70	1.70	1.70	1.62	1.83	1.62	0.29	0.46
Reynolds No	-	5.23E+05	6.56E+05	6.56E+05	3.40E+05	3.40E+05	3.40E+05	6.66E+05	6.66E+05	6.66E+05	6.66E+05	6.66E+05	6.66E+05	4.35E+05	4.75E+05	4.35E+05	1.91E+05	2.40E+05
Friction Factor	-	0.0152	0.0154	0.0154	0.0168	0.0168	0.0168	0.0160	0.0160	0.0160	0.0160	0.0160	0.0160	0.0164	0.0174	0.0164	0.0171	0.0169
Press. @Out	Kg/cm2.G	0.515	-0.004	-0.008	-0.005	-0.002	-4.305	-0.027	-0.018	-0.009	-0.800	-0.018	-0.018	-1.302	-0.830	-0.765	0.520	-0.001
Pressure Drop by Friction	Kg/cm2	0.0062	0.004	0.008	0.005	0.002	0.030	0.027	0.018	0.009	0.046	0.018	0.018	0.322	0.098	0.381	0.001	0.001
Pressure Drop by Gravity	Kg/cm2	-0.521	0.000	0.000	0.000	0.000	4.275	0.000	0.000	0.000	0.755	0.000	0.000	0.979	0.731	0.384	-0.521	0.000
Dp / 100 m (by friction)	Kg/cm2	0.0154	0.0487	0.0487	0.0326	0.0326	0.0326	0.1190	0.1190	0.1190	0.1190	0.1190	0.1190	0.1168	0.2250	0.1168	0.0023	0.0071
VAPOR PHASE CALCULATION																		
Flow Rate,max op	Kg/h																	
Flow Rate Design Margin	%																	
Density @PT	Kg/m3																	
or MW	(-)																	
Compr. Z	(-)																	
Viscosity @PT	cP																	
Flow Rate,rated	Kg/h																	
Vol. Flow @in	m3/sec																	
Gas Density @in	Kg/m3																	
Velocity @in	m/s																	
Reynolds No	-																	
Friction Factor	-																	
Gas Dns @Out	Kg/m3																	
Velocity @Out	m/s																	
Mach no. @Out	-																	
Press. @Out	Kg/cm2.G																	
Pressure Drop by Friction	Kg/cm2																	
Pressure Drop by Gravity	Kg/cm2																	
Dp / 100 m (by friction)	Kg/cm2																	

30-P-302A/B

LOTTE E&C 롯데건설주식회사	JOB NO.		PREPD BY:	J.H.Kim	DATE:	Sep. 26 '22	PAGE:	1 / 3	0
	SERVICE	Deheptanizer Bottoms Pump (PATH 1)	CHKD BY:	J.H.Myung	APPD BY:	J.Y.Kim			

*** Result**

1) Diff. Pressure

Datasheet : 6.81 kg/cm2
Calculation : 6.81 kg/cm2
-> No problem

2) Line Size

Reference
- Suc. : Velocity : 1.2 ~ 2.4 m/s, ΔP/100m : 0.23 kg/cm2
- Disch. : Velocity : 1.8 ~ 2.4 m/s, ΔP/100m : 1.38 kg/cm2

Calculation :
-> No problem

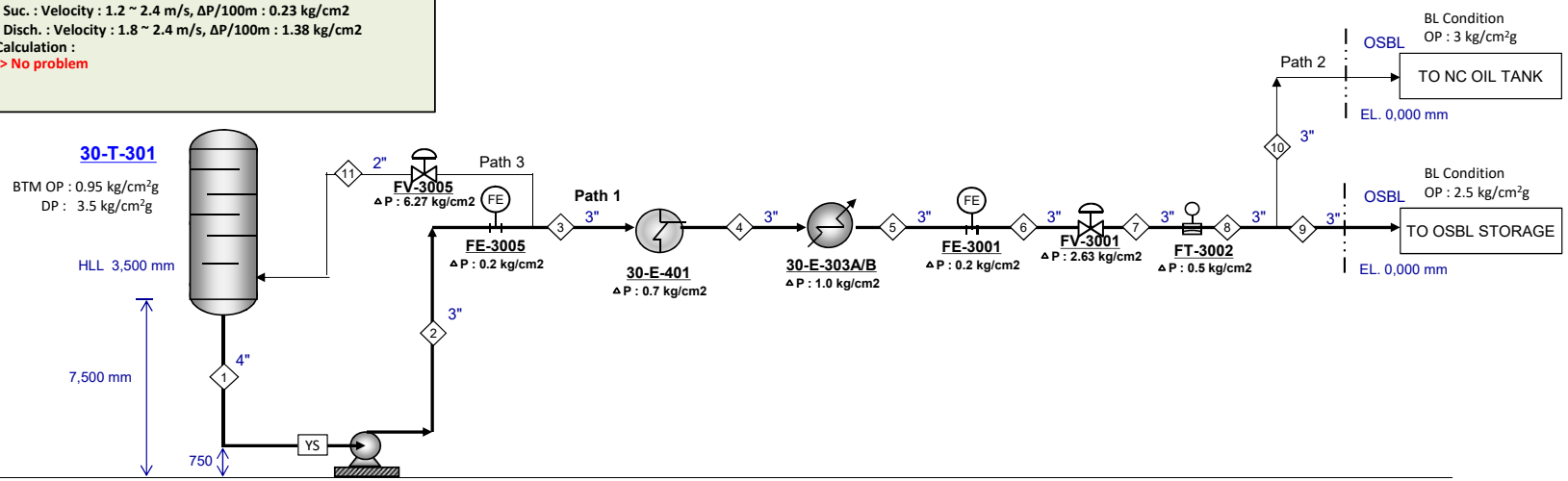

NOTE : 1. Assumed Data as below.
- Strainer △P = 0.07 kg/cm2
- Flowmeter △P = 0.2 kg/cm2

2. Rated capacity is designed according to the licensor datasheet

CV Input Data		
Item No.		
Des. Cap.		
Density		
D.P		
Char.		

PUMP CALCULATION		
ITEM NUMBER	30-P-302A/B	
SUCTION		
Flow Rate	10.9	m3/hr
Operating Pres.	0.95	kg/cm².G
Design Pres.	3.5	kg/cm².G
Min. Static Head	7.5	meter
Max. Static Head	11	meter
Pump Shaft Level	0.75	meter
Vapor Pres.	1.983	kg/cm².A
Allowance	0	meter
Pipe Friction Loss	0.002	kg/cm²
Strainer	0.07	kg/cm²
Others		kg/cm²
Net Suction Pres.	1.36	kg/cm².G
Max. Suction Pres.	4.23	kg/cm².G
NPSH Available	5.74	meter
DISCHARGE		
Operating Pres.	2.5	kg/cm².G
Max. Static Head	0.0	meter
Pipe friction Loss	0.439	kg/cm².G
Pipe Gravity Loss	-0.062	kg/cm³.G
Equip. Pres. Drop	2.6	kg/cm².G
Control Valves	2.6	kg/cm².G
Others	0.06	kg/cm².G
Disch. Press. Req'd	8.17	kg/cm².G
Diff. Pres.	6.81	kg/cm²
Diff. Head (Net)	95	meter
Hydr. Horsepower	2.0	KW
Est. Efficieny		%
Est. BHP		KW
Est. Shut-off Pres.	12.74	kg/cm².G
C.V dp / Friction	84.88	%

CONTROL VALVES			
ITEM NO.	CAL. CV	RTD CV	% OPEN

		SUCTION			DISCHARGE																	
STREAM ID	UNIT	1			2	FE-3005	3	30-E-401	4	30-E-303A/B	5	FE-3001	6	FV-3001	7	FT-3002	8	9				
Design Case																						
Phase		LIQUID			LIQUID		LIQUID		LIQUID		LIQUID		LIQUID		LIQUID		LIQUID	LIQUID				
Vapor Fraction																						
Normal Flow Rate	kg/hr	7,069			7,069		6,874		6,874		6,874		6,874		6,874		6,874	6,874				
Over Design	%	10			10		10		10		10		10		10		10	10				
Rated Flow Rate	kg/hr	7,776			7,776		7,561		7,561		7,561		7,561		7,561		7,561	7,561				
Temperature	°C	166.0			166.0		166.0		100.6		40.0		40.0		40.0		40.0	40.0				
Pressure @Inlet	kg/cm²G	0.95			8.17	8.16	7.96	7.89	7.19	7.13	6.13	6.12	5.92	5.92	3.29	3.29	2.79	2.27				
Pressure @Destination	kg/cm²G	1.36			8.16	7.96	7.89	7.19	7.13	6.13	6.12	5.92	5.92	3.29	3.29	2.79	2.27	2.56				
Line Size	inch	4			3		3		3		3		3		3		3	3				
Equivalent Length	M	24.6			7.0		204.2		197.2		14.1		7.0		7.0		7.0	859.2				
Elevation Change	M	-6.8			0.0		0.0		0.0		0.0		0.0		0.0		6.3	-7.0				
Fluid, Density	kg/m³	716.0			716.0		716.0		782.4		832.5		832.5		832.5		832.5	832.5				
Fluid, Viscosity	cP	0.177			0.177		0.177		0.304		0.552		0.552		0.552		0.552	0.552				
Velocity	m/sec	0.37			0.63		0.61		0.56		0.53		0.53		0.53		0.53	0.53				
Pres. Drop by Friction	kg/cm²	0.002			0.003	0.000	0.070	0.000	0.065	0.000	0.005	0.000	0.002	0.000	0.002	0.000	0.002	0.289				
Pres. Drop by Gravity	kg/cm²	-0.483			0.000	0.000	0.000	0.000	0.000	0.000	0.000	0.000	0.000	0.000	0.000	0.000	0.520	-0.583				
Pressure Drop / 100 M	kg/cm²	0.009			0.036		0.034		0.033		0.034		0.034		0.034		0.034	0.034				
Equipment Pres. Drop	kg/cm²	0.07				0.20		0.7		1.00		0.20				0.50						
CV PRESSURE DROP	kg/cm²													2.63								

LOTTE E&C 롯데건설주식회사	JOB NO.		PREPD BY:	J.H.Kim	DATE:	Sep. 26 '22	PAGE:	2 / 3	0
	SERVICE	Deheptanizer Bottoms Pump (PATH 2)	CHKD BY:	J.H.Myung	APPD BY:	J.Y.Kim			

*** Result**

1) Diff. Pressure

Datasheet : 6.81 kg/cm2
Calculation : 6.81 kg/cm2
-> No problem

2) Line Size

Reference
- Suc. : Velocity : 1.2 ~ 2.4 m/s, ΔP/100m : 0.23 kg/cm2
- Disch. : Velocity : 1.8 ~ 2.4 m/s, ΔP/100m : 1.38 kg/cm2

Calculation :
-> No problem

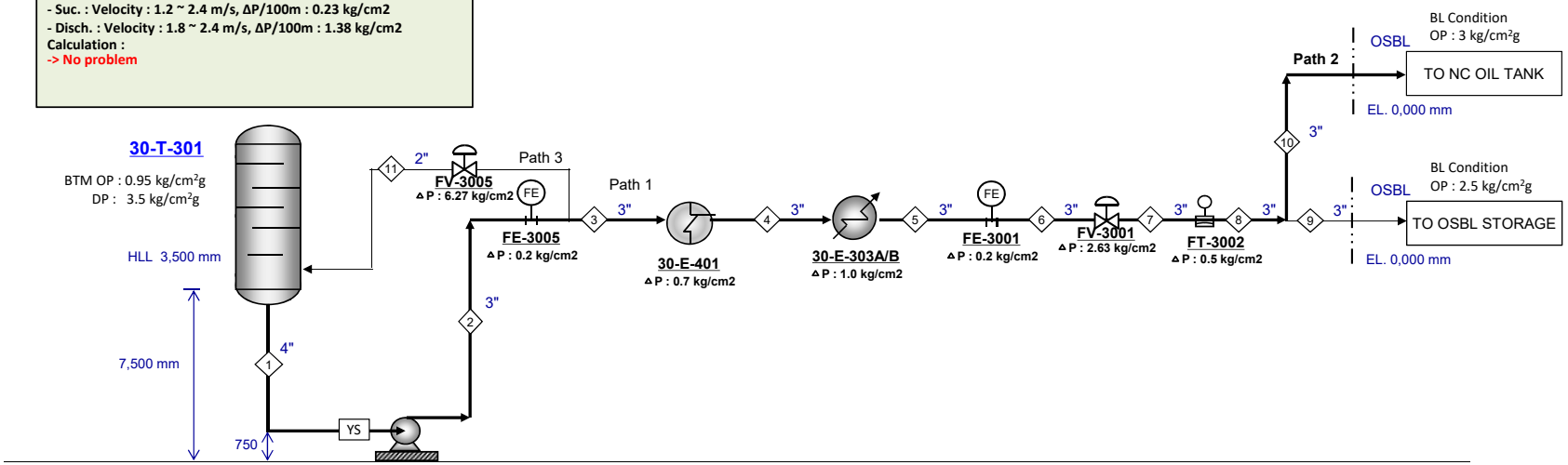

NOTE : 1. Assumed Data as below.
- Strainer △P = 0.07 kg/cm2
- Flowmeter △P = 0.2 kg/cm2

2. Rated capacity is designed according to the licensor datasheet

CV Input Data		
Item No.		
Des. Cap.		
Density		
D.P		
Char.		

PUMP CALCULATION

ITEM NUMBER	30-P-302A/B	
SUCTION		
Flow Rate	10.9	m3/hr
Operating Pres.	0.95	kg/cm².G
Design Pres.	3.5	kg/cm².G
Min. Static Head	7.5	meter
Max. Static Head	11	meter
Pump Shaft Level	0.75	meter
Vapor Pres.	1.983	kg/cm².A
Allowance	0	meter
Pipe Friction Loss	0.002	kg/cm²
Strainer	0.07	kg/cm²
Others		kg/cm²
Net Suction Pres.	1.36	kg/cm².G
Max. Suction Pres.	4.23	kg/cm².G
NPSH Available	5.74	meter
DISCHARGE		
Operating Pres.	3.0	kg/cm².G
Max. Static Head	0.0	meter
Pipe friction Loss	0.320	kg/cm².G
Pipe Gravity Loss	-0.062	kg/cm³.G
Equip. Pres. Drop	2.1	kg/cm².G
Control Valves	2.6	kg/cm².G
Others	0.18	kg/cm².G
Disch. Press. Req'd	8.17	kg/cm².G
Diff. Pres.	6.81	kg/cm²
Diff. Head (Net)	95	meter
Hydr. Horsepower	2.0	KW
Est. Efficieny		%
Est. BHP		KW
Est. Shut-off Pres.	12.74	kg/cm².G
C.V dp / Friction	101.14	%

CONTROL VALVES

ITEM NO.	CAL. CV	RTD CV	% OPEN

		SUCTION			DISCHARGE																		
STREAM ID	UNIT	1			2	FE-3005	3	30-E-401	4	30-E-303A/B	5	FE-3001	6	FV-3001	7	FT-3002	8	10				
Design Case																						
Phase		LIQUID			LIQUID		LIQUID		LIQUID		LIQUID		LIQUID		LIQUID		LIQUID	LIQUID				
Vapor Fraction																						
Normal Flow Rate	kg/hr	7,069			7,069		6,874		6,874		6,874		6,874		6,874		6,874	6,743				
Over Design	%	10			10		10		10		10		10		10		10	10				
Rated Flow Rate	kg/hr	7,776			7,776		7,561		7,561		7,561		7,561		7,561		7,561	7,418				
Temperature	°C	166.0			166.0		166.0		100.6		40.0		40.0		40.0		40.0	40.0				
Pressure @Inlet	kg/cm²G	0.95			8.17	8.17	7.97	7.90	7.20	7.13	6.63	6.63	6.43	6.42	3.79	3.79	3.29	2.77				
Pressure @Destination	kg/cm²G	1.36			8.17	7.97	7.90	7.20	7.13	6.63	6.63	6.43	6.42	3.79	3.79	3.29	2.77	3.18				
Line Size	inch	4			3		3		3		3		3		3		3	3				
Equivalent Length	M	24.6			7.0		204.2		197.2		14.1		7.0		7.0		7.0	526.0				
Elevation Change	M	-6.8			0.0		0.0		0.0		0.0		0.0		0.0		6.3	-7.0				
Fluid, Density	kg/m³	716.0			716.0		716.0		782.4		832.5		832.5		832.5		832.5	832.5				
Fluid, Viscosity	cP	0.177			0.177		0.177		0.304		0.552		0.552		0.552		0.552	0.552				
Velocity	m/sec	0.37			0.63		0.61		0.56		0.53		0.53		0.53		0.53	0.52				
Pres. Drop by Friction	kg/cm²	0.002			0.003	0.000	0.070	0.000	0.065	0.000	0.005	0.000	0.002	0.000	0.002	0.000	0.002	0.171				
Pres. Drop by Gravity	kg/cm²	-0.483			0.000	0.000	0.000	0.000	0.000	0.000	0.000	0.000	0.000	0.000	0.000	0.000	0.520	-0.583				
Pressure Drop / 100 M	kg/cm²	0.009			0.036		0.034		0.033		0.034		0.034		0.034		0.034	0.032				
Equipment Pres. Drop	kg/cm²	0.07				0.20		0.7		0.50		0.20				0.50						
CV PRESSURE DROP	kg/cm²													2.63								

LOTTE E&C 롯데건설주식회사	JOB NO.		PREPD BY:	J.H.Kim	DATE:	Sep. 26 '22	PAGE:	3 / 3	0
	SERVICE	Deheptanizer Bottoms Pump (PATH 3)	CHKD BY:	J.H.Myung	APPD BY:	J.Y.Kim			

*** Result**

1) Diff. Pressure

Datasheet : 6.81 kg/cm2
Calculation : 6.81 kg/cm2
-> No problem

2) Line Size

Reference
- Suc. : Velocity : 1.2 ~ 2.4 m/s, ΔP/100m : 0.23 kg/cm2
- Disch. : Velocity : 1.8 ~ 2.4 m/s, ΔP/100m : 1.38 kg/cm2

Calculation :
-> No problem

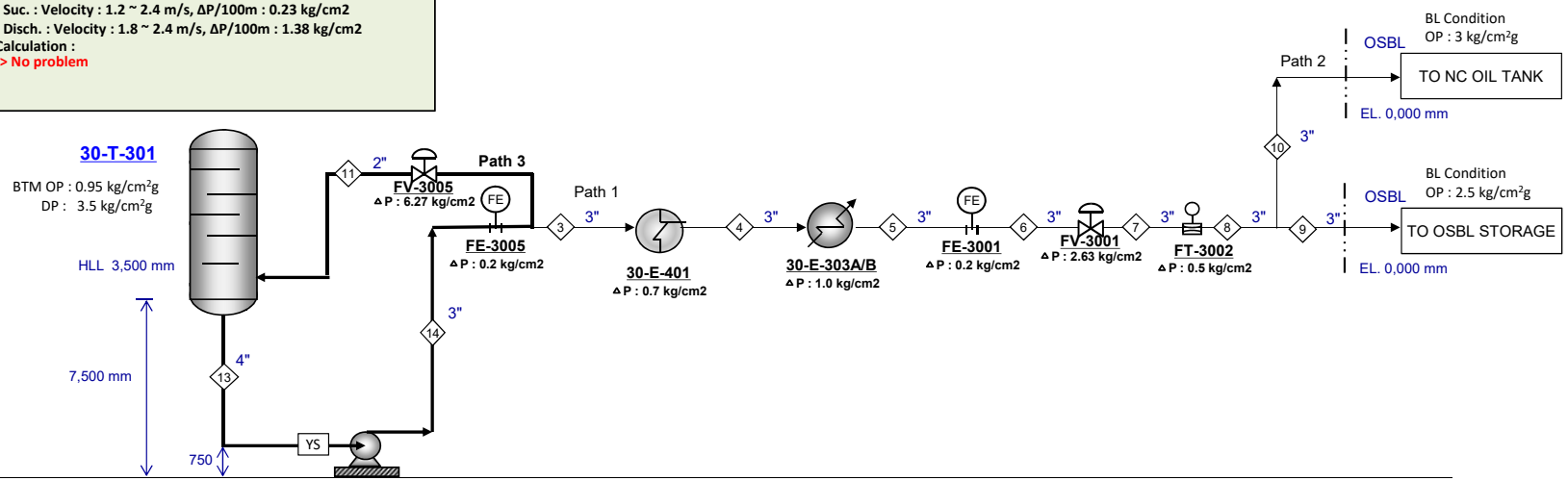

NOTE : 1. Assumed Data as below.
- Strainer △P = 0.07 kg/cm2
- Flowmeter △P = 0.2 kg/cm2

2. Rated capacity is designed according to the licensor datasheet

	CV Input Data	
Item No.		
Des. Cap.		
Density		
D.P		
Char.		

PUMP CALCULATION		
ITEM NUMBER	**30-P-302A/B**	
SUCTION		
Flow Rate	10.9	m3/hr
Operating Pres.	0.95	kg/cm².G
Design Pres.	3.5	kg/cm².G
Min. Static Head	7.5	meter
Max. Static Head	11	meter
Pump Shaft Level	0.75	meter
Vapor Pres.	1.983	kg/cm².A
Allowance	0	meter
Pipe Friction Loss	0.001	kg/cm²
Strainer	0.07	kg/cm²
Others		kg/cm²
Net Suction Pres.	1.36	kg/cm².G
Max. Suction Pres.	4.23	kg/cm².G
NPSH Available	5.76	meter
DISCHARGE		
Operating Pres.	0.95	kg/cm².G
Max. Static Head	11.0	meter
Pipe friction Loss	0.017	kg/cm².G
Pipe Gravity Loss	0.734	kg/cm³.G
Equip. Pres. Drop	0.2	kg/cm².G
Control Valves	6.3	kg/cm².G
Others		kg/cm².G
Disch. Press. Req'd	8.17	kg/cm².G
Diff. Pres.	6.81	kg/cm²
Diff. Head (Net)	95	meter
Hydr. Horsepower	0.9	KW
Est. Efficieny		%
Est. BHP		KW
Est. Shut-off Pres.	12.74	kg/cm².G
C.V dp / Friction	2889.95	%

CONTROL VALVES			
ITEM NO.	CAL. CV	RTD CV	% OPEN

		SUCTION			DISCHARGE																	
STREAM ID	UNIT	13			14	FE-3005	FV-3005	11														
Design Case																						
Phase		LIQUID			LIQUID			LIQUID														
Vapor Fraction																						
Normal Flow Rate	kg/hr	3,580			3,580			3,580														
Over Design	%	0			0			0														
Rated Flow Rate	kg/hr	3,580			3,580			3,580														
Temperature	°C	166.0			166.0			166.0														
Pressure @Inlet	kg/cm²G	0.95			8.17	8.17	7.97	1.70														
Pressure @Destination	kg/cm²G	1.36			8.17	7.97	1.70	0.95														
Line Size	inch	4			3			2														
Equivalent Length	M	24.6			7.0			27.1														
Elevation Change	M	-6.8			0.0			10.3														
Fluid, Density	kg/m³	716.0			716.0			716.0														
Fluid, Viscosity	cP	0.177			0.177			0.177														
Velocity	m/sec	0.17			0.29			0.64														
Pres. Drop by Friction	kg/cm²	0.001			0.001	0.000	0.000	0.016														
Pres. Drop by Gravity	kg/cm²	-0.483			0.000	0.000	0.000	0.734														
Pressure Drop / 100 M	kg/cm²	0.002			0.008			0.060														
Equipment Pres. Drop	kg/cm²	0.07				0.20																
CV PRESSURE DROP	kg/cm²						6.27															

LINE IDENTIFICATION		1	2	3	4	5	6	7	8	9	10	11	12	13	14	15	16	17
SIMU. STREAM ID																		
SERVICE												PUMP MIN. FLOW						
TYPE OF FLOW	(L/V/2PH)	LIQUID	LIQUID	LIQUID	LIQUID	LIQUID	LIQUID	LIQUID	LIQUID	LIQUID	LIQUID	LIQUID	LIQUID	LIQUID	LIQUID			
OPERATING CONDITION																		
Temperature	C	166	166	166	101	40	40	40	40	40	40	166	40	166	166			
Pressure @up	Kg/cm2.G																	
Pressure @down	Kg/cm2.G	0.48	0.00	-0.07	-0.07	0.00	0.00	0.00	-0.52	0.29	0.41	-0.75	-0.50	0.48	0.00			
PIPING INFORMATION																		
Nominal Size	inch	4.0	3.0	3.0	3.0	3.0	3.0	3.0	3.0	3.0	3.0	2.0	3.0	4.0	3.0			
Schedule or Class	-	40	40	40	40	40	40	40	40	40	40	40	40	40	40			
Line length,straight	m	20.0	5.0	145.0	140.0	10.0	5.0	5.0	5.0	610.0	517.5	20.0	215.0	20.0	5.0			
Eqivalent Length Over Design Factor	-	0.25	0.50	0.50	0.50	0.50	0.50	0.50	0.50	0.50	FITTING	0.50	0.50	0.25	0.50			
Net Elevation Change	m	(6.8)	0.0	0.0	0.0	0.0	0.0	0.0	6.3	(7.0)	(7.0)	10.3	4.8	(6.8)	0.0			
Equivalent Length	m	24.6	7.0	204.2	197.2	14.1	7.0	7.0	7.0	859.2	526.0	27.1	302.8	24.6	7.0			
Pipe inside Dia.	m	0.102	0.078	0.078	0.078	0.078	0.078	0.078	0.078	0.078	0.078	0.053	0.078	0.102	0.078			
Wall Roughness	mm	0.046	0.046	0.046	0.046	0.046	0.046	0.046	0.046	0.046	0.046	0.046	0.046	0.046	0.046			
LIQUID PHASE CALCULATION																		
Flow Rate	Kg/h	7,069	7,069	6,874	6,874	6,874	6,874	6,874	6,874	6,874	6,743	3,580	6,874	3,580	3,580			
Flow Rate Design Margin	%	10	10	10	10	10	10	10	10	10	10.00	0	10	0	0			
Density @PT	Kg/m3	716.0	716.0	716.0	782.4	832.5	832.5	832.5	832.5	832.5	832.5	716.0	832.5	716.0	716.0			
Viscosity @PT	cP	0.177	0.177	0.177	0.304	0.552	0.552	0.552	0.552	0.552	0.552	0.177	0.552	0.177	0.177			
Surface Tension	dyn/cm																	
Flow Rate, rated	kg/h	7,776	7,776	7,561	7,561	7,561	7,561	7,561	7,561	7,561	7,418	3,580	7,561	3,580	3,580			
Vol. Flow	m3/hr	10.9	10.9	10.6	9.7	9.1	9.1	9.1	9.1	9.1	8.9	5.0	9.1	5.0	5.0			
Velocity	m/s	0.37	0.63	0.61	0.56	0.53	0.53	0.53	0.53	0.53	0.52	0.64	0.53	0.17	0.29			
Reynolds No	-	1.52E+05	1.99E+05	1.94E+05	1.13E+05	6.22E+04	6.22E+04	6.22E+04	6.22E+04	6.22E+04	6.10E+04	1.36E+05	6.22E+04	7.00E+04	9.18E+04			
Friction Factor	-	0.0191	0.0193	0.0193	0.0204	0.0221	0.0221	0.0221	0.0221	0.0221	0.0221	0.0211	0.0221	0.0212	0.0209			
Press. @Out	Kg/cm2.G	0.481	-0.003	-0.070	-0.065	-0.005	-0.002	-0.002	-0.523	0.294	0.412	-0.750	-0.497	0.483	-0.001			
Pressure Drop by Friction	Kg/cm2	0.0023	0.003	0.070	0.065	0.005	0.002	0.002	0.002	0.289	0.171	0.016	0.102	0.001	0.001			
Pressure Drop by Gravity	Kg/cm2	-0.483	0.000	0.000	0.000	0.000	0.000	0.000	0.520	-0.583	-0.583	0.734	0.395	-0.483	0.000			
Dp / 100 m (by friction)	Kg/cm2	0.0092	0.0361	0.0342	0.0331	0.0336	0.0336	0.0336	0.0336	0.0336	0.0325	0.0605	0.0336	0.0022	0.0083			
VAPOR PHASE CALCULATION																		
Flow Rate,max op	Kg/h																	
Flow Rate Design Margin	%																	
Density @PT	Kg/m3																	
or MW	(-)																	
Compr. Z	(-)																	
Viscosity @PT	cP																	
Flow Rate,rated	Kg/h																	
Vol. Flow @in	m3/sec																	
Gas Density @in	Kg/m3																	
Velocity @in	m/s																	
Reynolds No	-																	
Friction Factor	-																	
Gas Dns @Out	Kg/m3																	
Velocity @Out	m/s																	
Mach no. @Out	-																	
Press. @Out	Kg/cm2.G																	
Pressure Drop by Friction	Kg/cm2																	
Pressure Drop by Gravity	Kg/cm2																	
Dp / 100 m (by friction)	Kg/cm2																	

30-P-303A/B

LOTTE E&C 롯데건설주식회사	JOB NO.		PREPD BY: J.H.Kim	DATE: Sep. 26 '22	PAGE: 1 / 2	0
	SERVICE	EDC Feed Pump (PATH1)	CHKD BY: J.H.Myung	APPD BY: J.Y.Kim		

*** Result**

1) Diff. Pressure

Datasheet : 5.06 kg/cm2
Calculation : 5.06kg/cm2
-> No problem

2) Line Size

Reference
- Suc. : Velocity : 1.2 ~ 2.4 m/s, ΔP/100m : 0.23 kg/cm2
- Disch. : Velocity : 2.4 ~ 3.0 m/s, ΔP/100m : 0.92 kg/cm2

Calculation :
-> No problem

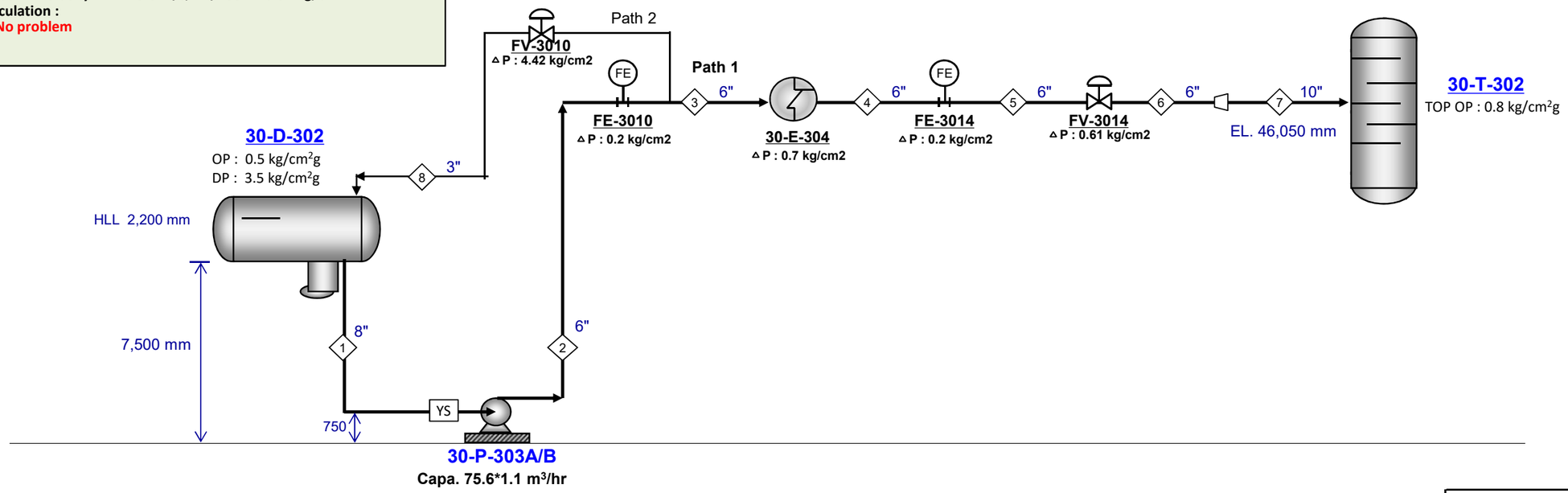

NOTE : 1. Assumed Data as below.
- Strainer △P = 0.07 kg/cm2
- Flowmeter △P = 0.2 kg/cm2

CV Input Data		
Item No.		
Des. Cap.		
Density		
D.P		
Char.		

PUMP CALCULATION

ITEM NUMBER	30-P-303A/B	
SUCTION		
Flow Rate	83.2	m3/hr
Operating Pres.	0.5	kg/cm².G
Design Pres.	3.5	kg/cm².G
Min. Static Head	7.5	meter
Max. Static Head	9.7	meter
Pump Shaft Level	0.75	meter
Vapor Pres.	1.01	kg/cm².A
Allowance	0	meter
Pipe Friction Loss	0.004	kg/cm²
Strainer	0.07	kg/cm²
Others		kg/cm²
Net Suction Pres.	0.95	kg/cm².G
Max. Suction Pres.	4.20	kg/cm².G
NPSH Available	12.52	meter
DISCHARGE		
Operating Pres.	0.8	kg/cm².G
Max. Static Head	46.1	meter
Pipe friction Loss	0.101	kg/cm².G
Pipe Gravity Loss	3.400	kg/cm³.G
Equip. Pres. Drop	1.1	kg/cm².G
Control Valves	0.6	kg/cm².G
Others		kg/cm².G
Disch. Press. Req'd	6.01	kg/cm².G
Diff. Pres.	5.06	kg/cm²
Diff. Head (Net)	65	meter
Hydr. Horsepower	11.5	KW
Est. Efficieny		%
Est. BHP		KW
Est. Shut-off Pres.	10.52	kg/cm².G
C.V dp / Friction	50.80	%

CONTROL VALVES

ITEM NO.	CAL. CV	RTD CV	% OPEN

STREAM ID	UNIT	SUCTION 1			DISCHARGE 2	FE-3010	3	30-E-304	4	FE-3014	5	FV-3014	6	7
Design Case														
Phase		LIQUID			LIQUID		LIQUID		LIQUID		LIQUID		LIQUID	2PH
Vapor Fraction														0.029
Normal Flow Rate	kg/hr	58,817			58,817		58,817		58,817		58,817		58,817	58,817
Over Design	%	10			10		10		10		10		10	10
Rated Flow Rate	kg/hr	64,698			64,698		64,698		64,698		64,698		64,698	64,698
Temperature	°C	79.0			79.0		79.0		105.0		105.0		105.0	105.0
Pressure @Inlet	kg/cm²G	0.50			6.01	6.00	5.80	5.79	5.09	1.68	1.48	1.47	0.86	0.81
Pressure @Destination	kg/cm²G	0.95			6.00	5.80	5.79	5.09	1.68	1.48	1.47	0.86	0.81	0.80
Line Size	inch	8			6		6		6		6		6	10
Equivalent Length	M	26.0			15.3		23.0		15.3		7.7		84.3	16.6
Elevation Change	M	-6.8			0.0		0.0		45.3		0.0		0.0	0.0
Fluid, Density	kg/m³	778.0			778.0		778.0		750.6		750.6		750.6	248.5
Fluid, Viscosity	cP	0.305			0.305		0.305		0.240		0.240		0.240	
Velocity	m/sec	0.72			1.24		1.24		1.28		1.28		1.28	
Pres. Drop by Friction	kg/cm²	0.004			0.010	0.000	0.015	0.000	0.010	0.000	0.005	0.000	0.055	0.006
Pres. Drop by Gravity	kg/cm²	-0.525			0.000	0.000	0.000	0.000	3.400	0.000	0.000	0.000	0.000	0.000
Pressure Drop / 100 M	kg/cm²	0.016			0.064		0.064		0.066		0.066		0.066	0.034
Equipment Pres. Drop	kg/cm²	0.07				0.20		0.7		0.20				
CV PRESSURE DROP	kg/cm²											0.61		

LOTTE E&C 롯데건설주식회사	JOB NO.		PREPD BY:	J.H.Kim	DATE:	Sep. 26 '22	PAGE:	2 / 2	0
	SERVICE	EDC Feed Pump (PATH2)	CHKD BY:	J.H.Myung	APPD BY:	J.Y.Kim			

*** Result**

1) Diff. Pressure

Datasheet : 5.06 kg/cm2
Calculation : 5.06kg/cm2
-> No problem

2) Line Size

Reference
- Suc. : Velocity : 1.2 ~ 2.4 m/s, ΔP/100m : 0.23 kg/cm2
- Disch. : Velocity : 2.4 ~ 3.0 m/s, ΔP/100m : 0.92 kg/cm2

Calculation :
-> No problem

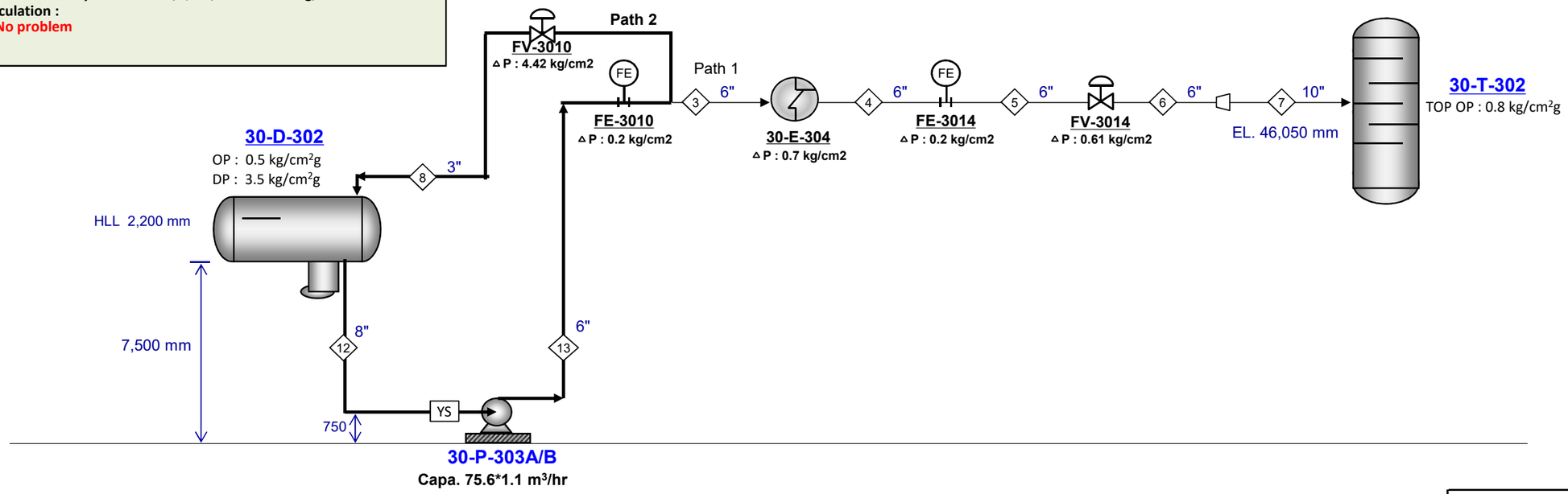

NOTE : 1. Assumed Data as below.
- Strainer △P = 0.07 kg/cm2
- Flowmeter △P = 0.2 kg/cm2

CV Input Data		
Item No.		
Des. Cap.		
Density		
D.P		
Char.		

PUMP CALCULATION

ITEM NUMBER	30-P-303A/B	
SUCTION		
Flow Rate	83.2	m3/hr
Operating Pres.	0.5	kg/cm².G
Design Pres.	3.5	kg/cm².G
Min. Static Head	7.5	meter
Max. Static Head	9.7	meter
Pump Shaft Level	0.75	meter
Vapor Pres.	1.01	kg/cm².A
Allowance	0	meter
Pipe Friction Loss	0.001	kg/cm²
Strainer	0.07	kg/cm²
Others		kg/cm²
Net Suction Pres.	0.95	kg/cm².G
Max. Suction Pres.	4.20	kg/cm².G
NPSH Available	12.56	meter
DISCHARGE		
Operating Pres.	0.5	kg/cm².G
Max. Static Head	10.5	meter
Pipe friction Loss	0.131	kg/cm².G
Pipe Gravity Loss	0.759	kg/cm³.G
Equip. Pres. Drop	0.2	kg/cm².G
Control Valves	4.4	kg/cm².G
Others		kg/cm².G
Disch. Press. Req'd	6.01	kg/cm².G
Diff. Pres.	5.06	kg/cm²
Diff. Head (Net)	65	meter
Hydr. Horsepower	5.2	KW
Est. Efficieny		%
Est. BHP		KW
Est. Shut-off Pres.	10.52	kg/cm².G
C.V dp / Friction	1336.20	%

CONTROL VALVES

ITEM NO.	CAL. CV	RTD CV	% OPEN

		SUCTION			DISCHARGE																	
STREAM ID	UNIT	12			13	FE-3010	FV-3010	8														
Design Case																						
Phase		LIQUID			LIQUID			LIQUID														
Vapor Fraction																						
Normal Flow Rate	kg/hr	29,564			29,564			29,564														
Over Design	%	0			0			0														
Rated Flow Rate	kg/hr	29,564			29,564			29,564														
Temperature	°C	79.0			79.0			79.0														
Pressure @Inlet	kg/cm²G	0.50			6.01	6.01	5.81	1.39														
Pressure @Destination	kg/cm²G	0.95			6.01	5.81	1.39	0.50														
Line Size	inch	8			6			3														
Equivalent Length	M	26.0			15.3			28.2														
Elevation Change	M	-6.8			0.0			9.8														
Fluid, Density	kg/m³	778.0			778.0			778.0														
Fluid, Viscosity	cP	0.305			0.305			0.305														
Velocity	m/sec	0.33			0.57			2.21														
Pres. Drop by Friction	kg/cm²	0.001			0.002	0.000	0.000	0.129														
Pres. Drop by Gravity	kg/cm²	-0.525			0.000	0.000	0.000	0.759														
Pressure Drop / 100 M	kg/cm²	0.004			0.014			0.456														
Equipment Pres. Drop	kg/cm²	0.07				0.20																
CV PRESSURE DROP	kg/cm²						4.42															

LINE IDENTIFICATION		1	2	3	4	5	6	7	8	9	10	11	12	13	14	15	16	17
SIMU. STREAM ID																		
SERVICE									PUMP MIN. FLOW	LV-3009 NNF								
TYPE OF FLOW	(L/V/2PH)	LIQUID	LIQUID	LIQUID	LIQUID	LIQUID	LIQUID	2PH	LIQUID	LIQUID	LIQUID	LIQUID	LIQUID	LIQUID				
OPERATING CONDITION																		
Temperature	C	79	79	79	105	105	105	105	79	79	79	40	79	79				
Pressure @up	Kg/cm2.G							0.52										
Pressure @down	Kg/cm2.G	0.52	-0.01	-0.01	-3.41	-0.01	-0.06	0.51	-0.89	0.00	-0.06	-1.11	0.52	0.00				
PIPING INFORMATION																		
Nominal Size	inch	8.0	6.0	6.0	6.0	6.0	6.0	10.0	3.0	6.0	6.0	6.0	8.0	6.0				
Schedule or Class	-	40	40	40	40	40	40	40	40	40	40	40	40	40				
Line length,straight	m	20.0	10.0	15.0	10.0	5.0	55.0	10.0	20.0	5.0	56.0	190.0	20.0	10.0				
Eqivalent Length Over Design Factor	-	0.25	0.50	0.50	0.50	0.50	0.50	0.50	0.50	0.50	0.50	0.50	0.25	0.50				
Net Elevation Change	m	(6.8)	0.0	0.0	45.3	0.0	0.0	0.0	9.8	0.0	0.0	11.4	(6.8)	0.0				
Equivalent Length	m	26.0	15.3	23.0	15.3	7.7	84.3	16.6	28.2	7.7	85.8	291.3	26.0	15.3				
Pipe inside Dia.	m	0.203	0.154	0.154	0.154	0.154	0.154	0.255	0.078	0.154	0.154	0.154	0.203	0.154				
Wall Roughness	mm	0.046	0.046	0.046	0.046	0.046	0.046	0.046	0.046	0.046	0.046	0.046	0.046	0.046				
LIQUID PHASE CALCULATION																		
Flow Rate	Kg/h	58,817	58,817	58,817	58,817	58,817	58,817	57,094	29,564	58,817	58,817	58,817	29,564	29,564				
Flow Rate Design Margin	%	10	10	10	10	10	10	10	0	10	10	10	0	0				
Density @PT	Kg/m3	778.0	778.0	778.0	750.6	750.6	750.6	755.9	778.0	778.0	778.0	816.1	778.0	778.0				
Viscosity @PT	cP	0.305	0.305	0.305	0.240	0.240	0.240	0.250	0.305	0.305	0.305	0.469	0.305	0.305				
Surface Tension	dyn/cm							17.7										
Flow Rate, rated	kg/h	64,698	64,698	64,698	64,698	64,698	64,698	62,804	29,564	64,698	64,698	64,698	29,564	29,564				
Vol. Flow	m3/hr	83.2	83.2	83.2	86.2	86.2	86.2	83.1	38.0	83.2	83.2	79.3	38.0	38.0				
Velocity	m/s	0.72	1.24	1.24	1.28	1.28	1.28	0.45	2.21	1.24	1.24	1.18	0.33	0.57				
Reynolds No	-	3.70E+05	4.87E+05	4.87E+05	6.19E+05	6.19E+05	6.19E+05	3.49E+05	4.40E+05	4.87E+05	4.87E+05	3.17E+05	1.69E+05	2.23E+05				
Friction Factor	-	0.0161	0.0163	0.0163	0.0160	0.0160	0.0160	0.0158	0.0183	0.0163	0.0163	0.0169	0.0177	0.0175				
Press. @Out	Kg/cm2.G	0.521	-0.010	-0.015	-3.410	-0.005	-0.055	0.519	-0.887	-0.005	-0.055	-1.112	0.524	-0.002				
Pressure Drop by Friction	Kg/cm2	0.0042	0.010	0.015	0.010	0.005	0.055	0.001	0.129	0.005	0.055	0.185	0.001	0.002				
Pressure Drop by Gravity	Kg/cm2	-0.525	0.000	0.000	3.400	0.000	0.000		0.759	0.000	0.000	0.926	-0.525	0.000				
Dp / 100 m (by friction)	Kg/cm2	0.0161	0.0645	0.0645	0.0658	0.0658	0.0658		0.4564	0.0645	0.0645	0.0636	0.0037	0.0145				
VAPOR PHASE CALCULATION																		
Flow Rate,max op	Kg/h							1,723										
Flow Rate Design Margin	%							10										
Density @PT	Kg/m3							4.70										
or MW	(-)																	
Compr. Z	(-)																	
Viscosity @PT	cP							0.009										
Flow Rate,rated	Kg/h							1,895										
Vol. Flow @in	m3/sec							0.11										
Gas Density @in	Kg/m3							4.70										
Velocity @in	m/s							2.20										
Reynolds No	-							2.93E+05										
Friction Factor	-							0.0162										
Gas Dns @Out	Kg/m3							4.700										
Velocity @Out	m/s							2.201										
Mach no. @Out	-							0.010										
Press. @Out	Kg/cm2.G							0.520										
Pressure Drop by Friction	Kg/cm2							0.000										
Pressure Drop by Gravity	Kg/cm2																	
Dp / 100 m (by friction)	Kg/cm2																	

LINE IDENTIFICATION		1	2	3	4	5	6	7	8	9	10	11	12	13	14	15	16	17
TWO-PHASE CALCULATION METHOD SELECTION								DuklerII										
TWO-PHASE CALCULATION (HTFS)																		
Vapor Flow rate @ outlet	Kg/hr							1,895										
Upward Angle	deg																	
C factor								17.973										
Liquid + Vapor density	Kg/m3							287.524										
Mach No.								0.071										
Slip Ratio								2.930										
Void Fraction								0.624										
Pressure Drop by Acceleration								0.000										
Pressure Drop by Friction	Kg/cm2							0.007										
Pres. Drop by Gravity	Kg/cm2							0.000										
TWO-PHASE CALCULATION (Homogeneous)																		
Bulk density	Kg/m3							120.96										
Bulk viscosity, centipoise	cP							0.050										
Velocity, m/sec	m/s							2.655										
Reynolds number	-							1.63E+06										
Friction factor	-							0.014										
Pressure Drop by Friction	Kg/cm2							0.004										
Pressure Drop by Gravity	Kg/cm2							0.000										
TWO-PHASE CALCULATION (Dukler)																		
In-place density	Kg/m3							248.45										
Reynolds number	-							9.81E+05										
Friction factor	-							0.014										
Pressure Drop by Friction	Kg/cm2							0.006										
Pressure Drop by Gravity	Kg/cm2							0.000										
Press. @Out	Kg/cm2.G							0.514										
Press. Drop	Kg/cm2							0.006										
FLOW REGIME FOR VERTICAL																		
Simpson	X-Axis(Xd)							0.002										
	Y-Axis(Fr)							0.110										
	Flow Regime							Intermit										
Griffith and Wallies	X-Axis							2.82										
	Y-Axis							0.83										
	Flow Regime							Slug										
Taitel and Dukler	Flow Regime							Slug										
(1) Bubble-Slug	X-Axis							17.92										
Annular trans	Y-Axis							0.21										
(2) Slug-Chum	X-Axis							1.68										
Transition	Y-Axis							0.83										
	2ph Re no.							2.04E+06										
(3) Annular-Churn	X-Axis							2.59										
Slug Trans.	Y-Axis							1.41										
FLOW REGIME FOR HORIZONTAL																		
Taitel and Dukler	X-Axis(Xp)							2.59										
	Y-Axis(Fr)							0.11										
	Y-Axis(Xt)							0.10										
	Y-Axis(Xk)							65.12										
	Flow Regime							Slug										
Baker	X-Axis							178.42										
	Y-Axis							4426										
	Flow Regime							Slug										

30-P-304A/B

LOTTE E&C 롯데건설주식회사

JOB NO.		PREPD BY:	J.H.Kim	DATE:	Sep. 26 '22	PAGE:	1 / 3	0
SERVICE	EDC Reflux Pump (Path 1)	CHKD BY:	J.H.Myung	APPD BY:	J.Y.Kim			

*** Result**

1) Diff. Pressure

Datasheet : 6.7 kg/cm2
PATH1 Calculation : 6.7 kg/cm2
-> No problem

PATH 1

LEAN CASE

2) Line Size

Reference
- Suc. : Velocity : 1.2 ~ 2.4 m/s, ΔP/100m : 0.23 kg/cm2
- Disch. : Velocity : 1.8 ~ 2.4 m/s, ΔP/100m : 0.92 kg/cm2

PATH1 Calculation :
-> No problem

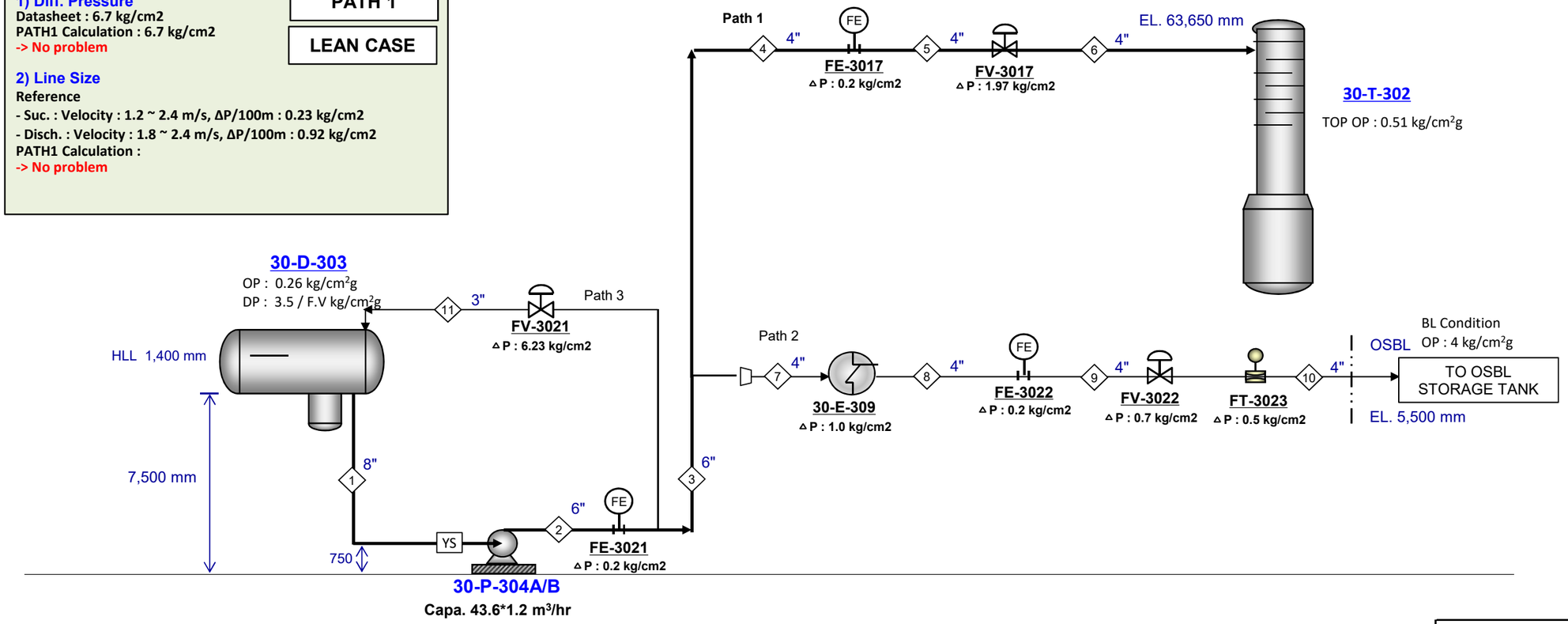

NOTE : 1. Assumed Data as below.
- Strainer △P = 0.07 kg/cm2
- Flowmeter △P = 0.2 kg/cm2

CV Input Data		
Item No.		
Des. Cap.		
Density		
D.P		
Char.		

PUMP CALCULATION

ITEM NUMBER	30-P-304A/B	
SUCTION		
Flow Rate	58.2	m3/hr
Operating Pres.	0.26	kg/cm².G
Design Pres.	3.5	kg/cm².G
Min. Static Head	7.5	meter
Max. Static Head	8.9	meter
Pump Shaft Level	0.75	meter
Vapor Pres.	0.606	kg/cm².A
Allowance	0	meter
Pipe Friction Loss	0.002	kg/cm²
Strainer	0.07	kg/cm²
Others		kg/cm²
Net Suction Pres.	0.66	kg/cm².G
Max. Suction Pres.	4.07	kg/cm².G
NPSH Available	15.51	meter
DISCHARGE		
Operating Pres.	0.51	kg/cm².G
Max. Static Head	63.5	meter
Pipe friction Loss	0.060	kg/cm².G
Pipe Gravity Loss	4.394	kg/cm³.G
Equip. Pres. Drop	0.4	kg/cm².G
Control Valves	2.0	kg/cm².G
Others	0.03	kg/cm².G
Disch. Press. Req'd	7.36	kg/cm².G
Diff. Pres.	6.70	kg/cm²
Diff. Head (Net)	96	meter
Hydr. Horsepower	10.6	KW
Est. Efficieny		%
Est. BHP		KW
Est. Shut-off Pres.	12.45	kg/cm².G
C.V dp / Friction	401.91	%

CONTROL VALVES

ITEM NO.	CAL. CV	RTD CV	% OPEN

		SUCTION			DISCHARGE																	
STREAM ID	UNIT	1			2	FE-3021	3	4	FE-3014	5	FV-3014	6										
Design Case																						
Phase		LIQUID			LIQUID		LIQUID	LIQUID		LIQUID		LIQUID										
Vapor Fraction																						
Normal Flow Rate	kg/hr	33,992			33,992		33,992	12,850		12,850		12,850										
Over Design	%	20			20		20	20		20		20										
Rated Flow Rate	kg/hr	40,790			40,790		40,790	15,420		15,420		15,420										
Temperature	°C	50.0			50.0		50.0	50.0		50.0		50.0										
Pressure @Inlet	kg/cm²G	0.26			7.36	7.36	7.16	7.15	7.15	6.95	6.95	4.98										
Pressure @Destination	kg/cm²G	0.66			7.36	7.16	7.15	7.15	6.95	6.95	4.98	0.54										
Line Size	inch	8			6		6	4		4		4										
Equivalent Length	M	32.5			15.3		23.0	7.3		7.3		116.4										
Elevation Change	M	-6.8			0.0		0.0	0.0		0.0		62.8										
Fluid, Density	kg/m³	701.2			702.8		702.8	700.2		700.2		700.2										
Fluid, Viscosity	cP	0.369			0.367		0.367	0.365		0.365		0.365										
Velocity	m/sec	0.50			0.86		0.86	0.74		0.74		0.74										
Pres. Drop by Friction	kg/cm²	0.002			0.005	0.000	0.007	0.003	0.000	0.003	0.000	0.043										
Pres. Drop by Gravity	kg/cm²	-0.473			0.000	0.000	0.000	0.000	0.000	0.000	0.000	4.394										
Pressure Drop / 100 M	kg/cm²	0.008			0.030		0.030	0.037		0.037		0.037										
Equipment Pres. Drop	kg/cm²	0.07				0.20			0.20													
CV PRESSURE DROP	kg/cm²										1.97											

LOTTE E&C 롯데건설주식회사	JOB NO.		PREPD BY: J.H.Kim	DATE: Sep. 26 '22	PAGE: 2 / 3	0
	SERVICE	EDC Reflux Pump (Path 2)	CHKD BY: J.H.Myung	APPD BY: J.Y.Kim		

*** Result**

1) Diff. Pressure

Datasheet : 6.7 kg/cm2
PATH2 Calculation : 6.7 kg/cm2
-> No problem

2) Line Size

Reference
- Suc. : Velocity : 1.2 ~ 2.4 m/s, ΔP/100m : 0.23 kg/cm2
- Disch. : Velocity : 1.8 ~ 2.4 m/s, ΔP/100m : 0.92 kg/cm2

PATH2 Calculation :
-> No problem

PATH 2

LEAN CASE

GOVERNING

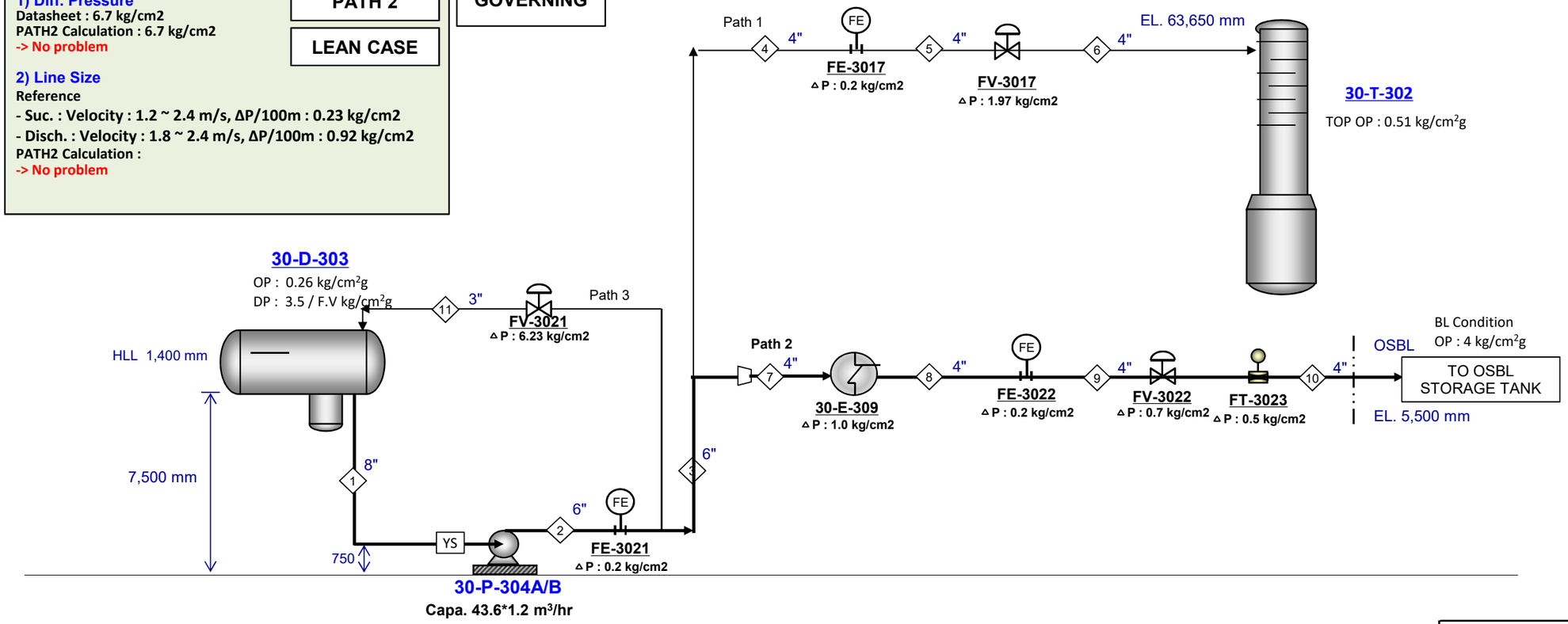

NOTE : 1. Assumed Data as below.
- Strainer △P = 0.07 kg/cm2
- Flowmeter △P = 0.2 kg/cm2

CV Input Data		
Item No.		
Des. Cap.		
Density		
D.P		
Char.		

PUMP CALCULATION

ITEM NUMBER	30-P-304A/B	
SUCTION		
Flow Rate	58.2	m3/hr
Operating Pres.	0.26	kg/cm².G
Design Pres.	3.5	kg/cm².G
Min. Static Head	7.5	meter
Max. Static Head	8.9	meter
Pump Shaft Level	0.75	meter
Vapor Pres.	0.606	kg/cm².A
Allowance	0	meter
Pipe Friction Loss	0.002	kg/cm²
Strainer	0.07	kg/cm²
Others		kg/cm²
Net Suction Pres.	0.66	kg/cm².G
Max. Suction Pres.	4.07	kg/cm².G
NPSH Available	15.51	meter
DISCHARGE		
Operating Pres.	4.0	kg/cm².G
Max. Static Head	5.5	meter
Pipe friction Loss	0.211	kg/cm².G
Pipe Gravity Loss	0.337	kg/cm³.G
Equip. Pres. Drop	1.9	kg/cm².G
Control Valves	0.7	kg/cm².G
Others	0.21	kg/cm².G
Disch. Press. Req'd	7.36	kg/cm².G
Diff. Pres.	6.70	kg/cm²
Diff. Head (Net)	96	meter
Hydr. Horsepower	10.6	KW
Est. Efficieny		%
Est. BHP		KW
Est. Shut-off Pres.	12.44	kg/cm².G
C.V dp / Friction	30.16	%

CONTROL VALVES

ITEM NO.	CAL. CV	RTD CV	% OPEN

		SUCTION			DISCHARGE																	
STREAM ID	UNIT	1			2	FE-3021	3	7	30-E-309	8	FE-3022	9	FV-3022	FT-3023	10							
Design Case																						
Phase		LIQUID			LIQUID		LIQUID	LIQUID		LIQUID		LIQUID			LIQUID							
Vapor Fraction																						
Normal Flow Rate	kg/hr	33,992			33,992		33,992	21,143		21,143		21,143			21,143							
Over Design	%	20			20		20	10		10		10			10							
Rated Flow Rate	kg/hr	40,790			40,790		40,790	23,257		23,257		23,257			23,257							
Temperature	°C	50.0			50.0		50.0	50.0		40.0		40.0			40.0							
Pressure @Inlet	kg/cm²G	0.26			7.36	7.35	7.15	7.15	7.13	6.13	6.11	5.91	5.90	5.20	4.70							
Pressure @Destination	kg/cm²G	0.66			7.35	7.15	7.15	7.13	6.13	6.11	5.91	5.90	5.20	4.70	4.21							
Line Size	inch	8			6		6	4		4		4			4							
Equivalent Length	M	32.5			15.3		23.0	21.8		29.1		7.3			189.2							
Elevation Change	M	-6.8			0.0		0.0	0.0		0.0		0.0			4.8							
Fluid, Density	kg/m³	701.2			702.8		702.8	702.8		711.9		711.9			710.2							
Fluid, Viscosity	cP	0.369			0.367		0.367	0.367		0.412		0.412			0.409							
Velocity	m/sec	0.50			0.86		0.86	1.12		1.10		1.10			1.11							
Pres. Drop by Friction	kg/cm²	0.002			0.005	0.000	0.007	0.018	0.000	0.023	0.000	0.006	0.000	0.000	0.153							
Pres. Drop by Gravity	kg/cm²	-0.473			0.000	0.000	0.000	0.000	0.000	0.000	0.000	0.000	0.000	0.000	0.337							
Pressure Drop / 100 M	kg/cm²	0.008			0.030		0.030	0.081		0.081		0.081			0.081							
Equipment Pres. Drop	kg/cm²	0.07				0.20			1.00		0.20			0.50								
CV PRESSURE DROP	kg/cm²												0.7									

LOTTE E&C 롯데건설주식회사	JOB NO.		PREPD BY: J.H.Kim	DATE: Sep. 26 '22	PAGE: 3 / 3	0
	SERVICE	EDC Reflux Pump (Path 3)	CHKD BY: J.H.Myung	APPD BY: J.Y.Kim		

*** Result**

1) Diff. Pressure

Datasheet : 6.7 kg/cm2
PATH2 Calculation : 6.7 kg/cm2
-> No problem

PATH 3

LEAN CASE

2) Line Size

Reference
- Suc. : Velocity : 1.2 ~ 2.4 m/s, ΔP/100m : 0.23 kg/cm2
- Disch. : Velocity : 1.8 ~ 2.4 m/s, ΔP/100m : 0.92 kg/cm2

PATH2 Calculation :
-> No problem

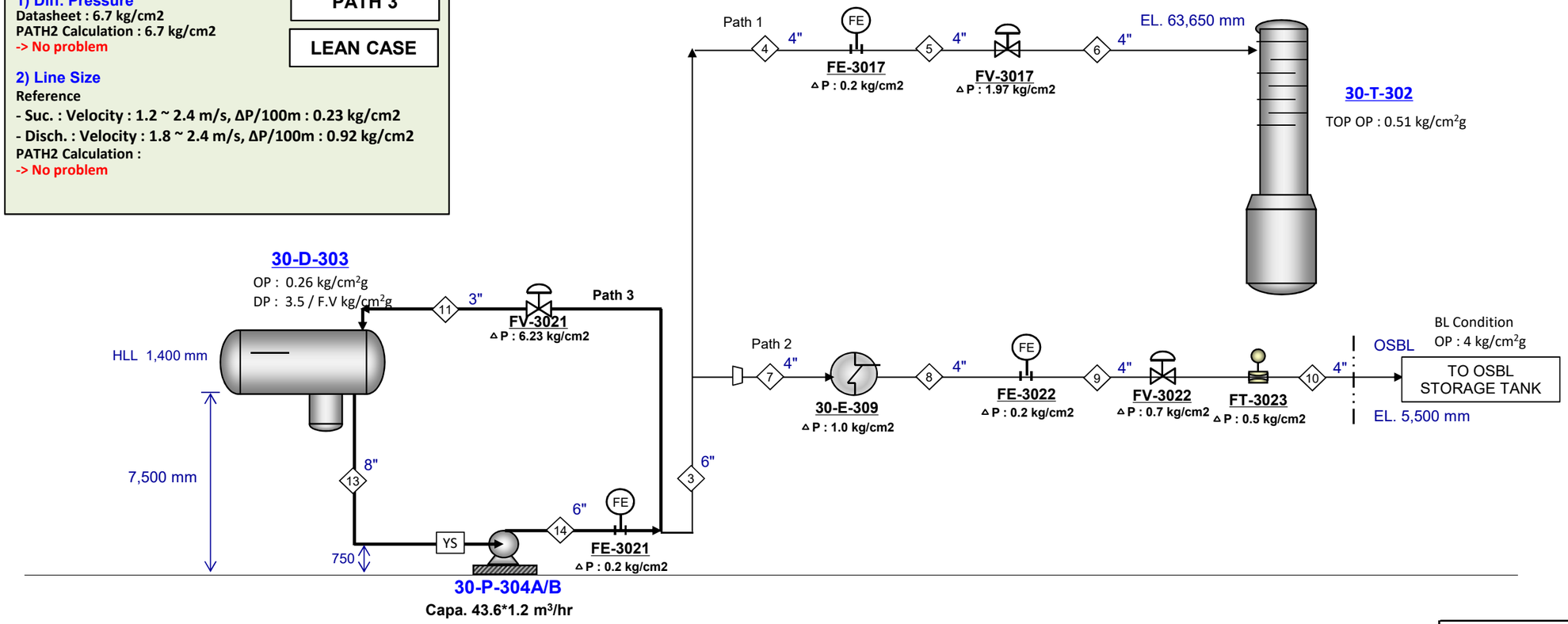

NOTE : 1. Assumed Data as below.
- Strainer △P = 0.07 kg/cm2
- Flowmeter △P = 0.2 kg/cm2

CV Input Data		
Item No.		
Des. Cap.		
Density		
D.P		
Char.		

PUMP CALCULATION		
ITEM NUMBER	30-P-304A/B	
SUCTION		
Flow Rate	58.2	m3/hr
Operating Pres.	0.26	kg/cm².G
Design Pres.	3.5	kg/cm².G
Min. Static Head	7.5	meter
Max. Static Head	8.9	meter
Pump Shaft Level	0.75	meter
Vapor Pres.	0.606	kg/cm².A
Allowance	0	meter
Pipe Friction Loss	0.000	kg/cm²
Strainer	0.07	kg/cm²
Others		kg/cm²
Net Suction Pres.	0.66	kg/cm².G
Max. Suction Pres.	4.07	kg/cm².G
NPSH Available	15.54	meter
DISCHARGE		
Operating Pres.	0.26	kg/cm².G
Max. Static Head	9.7	meter
Pipe friction Loss	0.048	kg/cm².G
Pipe Gravity Loss	0.628	kg/cm³.G
Equip. Pres. Drop	0.2	kg/cm².G
Control Valves	6.2	kg/cm².G
Others		kg/cm².G
Disch. Press. Req'd	7.37	kg/cm².G
Diff. Pres.	6.70	kg/cm²
Diff. Head (Net)	96	meter
Hydr. Horsepower	3.8	KW
Est. Efficieny		%
Est. BHP		KW
Est. Shut-off Pres.	12.45	kg/cm².G
C.V dp / Friction	2515.72	%

CONTROL VALVES			
ITEM NO.	CAL. CV	RTD CV	% OPEN

		SUCTION			DISCHARGE																	
STREAM ID	UNIT	13			14	FE-3021	FV-3021	11														
Design Case																						
Phase		LIQUID			LIQUID			LIQUID														
Vapor Fraction																						
Normal Flow Rate	kg/hr	14,725			14,725			14,725														
Over Design	%	0			0			0														
Rated Flow Rate	kg/hr	14,725			14,725			14,725														
Temperature	°C	50.0			50.0			50.0														
Pressure @Inlet	kg/cm²G	0.26			7.37	7.36	7.16	0.93														
Pressure @Destination	kg/cm²G	0.66			7.36	7.16	0.93	0.26														
Line Size	inch	8			6			3														
Equivalent Length	M	32.5			15.3			35.2														
Elevation Change	M	-6.8			0.0			9.0														
Fluid, Density	kg/m³	701.2			701.2			701.2														
Fluid, Viscosity	cP	0.369			0.369			0.369														
Velocity	m/sec	0.18			0.31			1.22														
Pres. Drop by Friction	kg/cm²	0.000			0.001	0.000	0.000	0.047														
Pres. Drop by Gravity	kg/cm²	-0.473			0.000	0.000	0.000	0.628														
Pressure Drop / 100 M	kg/cm²	0.001			0.004			0.133														
Equipment Pres. Drop	kg/cm²	0.07				0.20																
CV PRESSURE DROP	kg/cm²						6.23															

LINE IDENTIFICATION		1	2	3	4	5	6	7	8	9	10	11	12	13	14	15	16	17
SIMU. STREAM ID					Path 1			Path 2										
SERVICE					Pump DS * 51.9%			Pump DS * 48.1%				PUMP MIN. FLOW						
TYPE OF FLOW	(L/V/2PH)	LIQUID	LIQUID	LIQUID	LIQUID	LIQUID	LIQUID	LIQUID	LIQUID	LIQUID	LIQUID	LIQUID	LIQUID	LIQUID	LIQUID			
OPERATING CONDITION																		
Temperature	C	50	50	50	50	50	50	50	40	40	40	50	40	50	50			
Pressure @up	Kg/cm2.G																	
Pressure @down	Kg/cm2.G	0.47	0.00	-0.01	0.00	0.00	-4.44	-0.02	-0.02	-0.01	-0.49	-0.67	-0.75	0.47	0.00			
PIPING INFORMATION																		
Nominal Size	inch	8.0	6.0	6.0	4.0	4.0	4.0	4.0	4.0	4.0	4.0	3.0	4.0	8.0	6.0			
Schedule or Class	-	40	40	40	40	40	40	40	40	40	40	40	40	40	40			
Line length,straight	m	25.0	10.0	15.0	5.0	5.0	80.0	15.0	20.0	5.0	130.0	25.0	51.8	25.0	10.0			
Eqivalent Length Over Design Factor	-	0.25	0.50	0.50	0.50	0.50	0.50	0.5	0.50	0.50	0.50	0.50	0.50	0.25	0.50			
Net Elevation Change	m	(6.8)	0.0	0.0	0.0	0.0	62.8	0.0	0.0	0.0	4.8	9.0	9.8	(6.8)	0.0			
Equivalent Length	m	32.5	15.3	23.0	7.3	7.3	116.4	21.8	29.1	7.3	189.2	35.2	75.3	32.5	15.3			
Pipe inside Dia.	m	0.203	0.154	0.154	0.102	0.102	0.102	0.102	0.102	0.102	0.102	0.078	0.102	0.203	0.154			
Wall Roughness	mm	0.046	0.046	0.046	0.046	0.046	0.046	0.046	0.046	0.046	0.046	0.046	0.046	0.046	0.046			
LIQUID PHASE CALCULATION																		
Flow Rate	Kg/h	33,992	33,992	33,992	12,850	12,850	12,850	21,143	21,143	21,143	21,143	14,725	21,143	14,725	14,725			
Flow Rate Design Margin	%	20	20	20	20	20	20	10	10	10	10	0	10	0	0			
Density @PT	Kg/m3	701.2	702.8	702.8	700.2	700.2	700.2	702.8	711.9	711.9	710.2	701.2	710.2	701.2	701.2			
Viscosity @PT	cP	0.369	0.367	0.367	0.365	0.365	0.365	0.367	0.412	0.412	0.409	0.369	0.409	0.369	0.369			
Surface Tension	dyn/cm																	
Flow Rate, rated	kg/h	40,790	40,790	40,790	15,420	15,420	15,420	23,257	23,257	23,257	23,257	14,725	23,257	14,725	14,725			
Vol. Flow	m3/hr	58.2	58.0	58.0	22.0	22.0	22.0	33.1	32.7	32.7	32.7	21.0	32.7	21.0	21.0			
Velocity	m/s	0.50	0.86	0.86	0.74	0.74	0.74	1.12	1.10	1.10	1.11	1.22	1.11	0.18	0.31			
Reynolds No	-	1.93E+05	2.55E+05	2.55E+05	1.46E+05	1.46E+05	1.46E+05	2.19E+05	1.95E+05	1.95E+05	1.97E+05	1.81E+05	1.97E+05	6.96E+04	9.16E+04			
Friction Factor	-	0.0173	0.0172	0.0172	0.0192	0.0192	0.0192	0.0184	0.0186	0.0186	0.0186	0.0194	0.0186	0.0204	0.0197			
Press. @Out	Kg/cm2.G	0.471	-0.005	-0.007	-0.003	-0.003	-4.437	-0.018	-0.023	-0.006	-0.490	-0.675	-0.753	0.473	-0.001			
Pressure Drop by Friction	Kg/cm2	0.0025	0.005	0.007	0.003	0.003	0.043	0.018	0.023	0.006	0.153	0.047	0.061	0.000	0.001			
Pressure Drop by Gravity	Kg/cm2	-0.473	0.000	0.000	0.000	0.000	4.394	0.000	0.000	0.000	0.337	0.628	0.692	-0.473	0.000			
Dp / 100 m (by friction)	Kg/cm2	0.0077	0.0300	0.0300	0.0372	0.0372	0.0372	0.0808	0.0806	0.0806	0.0808	0.1333	0.0808	0.0012	0.0045			
VAPOR PHASE CALCULATION																		
Flow Rate,max op	Kg/h																	
Flow Rate Design Margin	%																	
Density @PT	Kg/m3																	
or MW	(-)																	
Compr. Z	(-)																	
Viscosity @PT	cP																	
Flow Rate,rated	Kg/h																	
Vol. Flow @in	m3/sec																	
Gas Density @in	Kg/m3																	
Velocity @in	m/s																	
Reynolds No	-																	
Friction Factor	-																	
Gas Dns @Out	Kg/m3																	
Velocity @Out	m/s																	
Mach no. @Out	-																	
Press. @Out	Kg/cm2.G																	
Pressure Drop by Friction	Kg/cm2																	
Pressure Drop by Gravity	Kg/cm2																	
Dp / 100 m (by friction)	Kg/cm2																	

LOTTE E&C 롯데건설주식회사	JOB NO.		PREPD BY: J.H.Kim	DATE: Sep. 26 '22	PAGE: 1 / 3	0
	SERVICE	EDC Reflux Pump (Path 1)	CHKD BY: J.H.Myung	APPD BY: J.Y.Kim		

*** Result**

1) Diff. Pressure

PATH 1

Datasheet : 6.7 kg/cm2
PATH1 Calculation : 6.7 kg/cm2
-> No problem

2) Line Size

Reference
- Suc. : Velocity : 1.2 ~ 2.4 m/s, ΔP/100m : 0.23 kg/cm2
- Disch. : Velocity : 1.8 ~ 2.4 m/s, ΔP/100m : 0.92 kg/cm2

PATH1 Calculation :
-> No problem

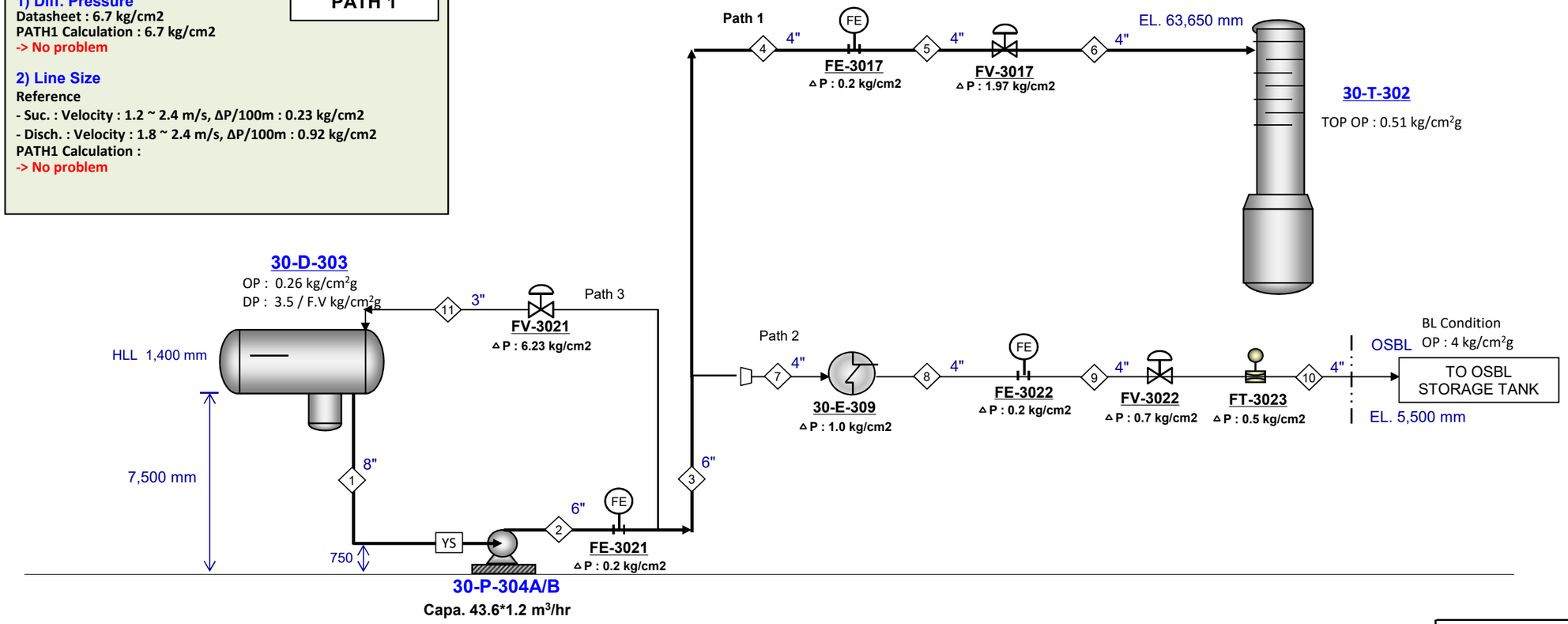

NOTE : 1. Assumed Data as below.
- Strainer △P = 0.07 kg/cm2
- Flowmeter △P = 0.2 kg/cm2

CV Input Data		
Item No.		
Des. Cap.		
Density		
D.P		
Char.		

PUMP CALCULATION		
ITEM NUMBER	30-P-304A/B	
SUCTION		
Flow Rate	52.3	m3/hr
Operating Pres.	0.26	kg/cm².G
Design Pres.	3.5	kg/cm².G
Min. Static Head	7.5	meter
Max. Static Head	8.9	meter
Pump Shaft Level	0.75	meter
Vapor Pres.	0.606	kg/cm².A
Allowance	0	meter
Pipe Friction Loss	0.002	kg/cm²
Strainer	0.07	kg/cm²
Others		kg/cm²
Net Suction Pres.	0.66	kg/cm².G
Max. Suction Pres.	4.07	kg/cm².G
NPSH Available	15.52	meter
DISCHARGE		
Operating Pres.	0.51	kg/cm².G
Max. Static Head	63.5	meter
Pipe friction Loss	0.082	kg/cm².G
Pipe Gravity Loss	4.399	kg/cm³.G
Equip. Pres. Drop	0.4	kg/cm².G
Control Valves	2.0	kg/cm².G
Others		kg/cm².G
Disch. Press. Req'd	7.36	kg/cm².G
Diff. Pres.	6.70	kg/cm²
Diff. Head (Net)	96	meter
Hydr. Horsepower	9.5	KW
Est. Efficieny		%
Est. BHP		KW
Est. Shut-off Pres.	12.45	kg/cm².G
C.V dp / Friction	408.81	%

CONTROL VALVES			
ITEM NO.	CAL. CV	RTD CV	% OPEN

STREAM ID	UNIT	SUCTION 1			DISCHARGE 2	FE-3021	3	4	FE-3014	5	FV-3014	6										
Design Case																						
Phase		LIQUID			LIQUID		LIQUID	LIQUID		LIQUID		LIQUID										
Vapor Fraction																						
Normal Flow Rate	kg/hr	30,564			30,564		30,564	15,871		15,871		15,871										
Over Design	%	20			20		20	20		20		20										
Rated Flow Rate	kg/hr	36,676			36,676		36,676	19,045		19,045		19,045										
Temperature	°C	50.0			50.0		50.0	50.0		50.0		50.0										
Pressure @Inlet	kg/cm²G	0.26			7.36	7.36	7.16	7.15	7.15	6.95	6.94	4.97										
Pressure @Destination	kg/cm²G	0.66			7.36	7.16	7.15	7.15	6.95	6.94	4.97	0.51										
Line Size	inch	8			6		6	4		4		4										
Equivalent Length	M	32.5			15.3		23.0	7.3		7.3		116.4										
Elevation Change	M	-6.8			0.0		0.0	0.0		0.0		62.8										
Fluid, Density	kg/m³	701.0			701.0		701.0	701.0		701.0		701.0										
Fluid, Viscosity	cP	0.365			0.365		0.365	0.365		0.365		0.365										
Velocity	m/sec	0.45			0.78		0.78	0.92		0.92		0.92										
Pres. Drop by Friction	kg/cm²	0.002			0.004	0.000	0.006	0.004	0.000	0.004	0.000	0.064										
Pres. Drop by Gravity	kg/cm²	-0.473			0.000	0.000	0.000	0.000	0.000	0.000	0.000	4.399										
Pressure Drop / 100 M	kg/cm²	0.006			0.025		0.025	0.055		0.055		0.055										
Equipment Pres. Drop	kg/cm²	0.07				0.20			0.20													
CV PRESSURE DROP	kg/cm²										1.97											

LOTTE E&C 롯데건설주식회사	JOB NO.		PREPD BY: J.H.Kim	DATE: Sep. 26 '22	PAGE: 2 / 3	0
	SERVICE	EDC Reflux Pump (Path 2)	CHKD BY: J.H.Myung	APPD BY: J.Y.Kim		

*** Result**

1) Diff. Pressure

Datasheet : 6.7 kg/cm2
PATH2 Calculation : 6.7 kg/cm2
-> No problem

2) Line Size

Reference
- Suc. : Velocity : 1.2 ~ 2.4 m/s, ΔP/100m : 0.23 kg/cm2
- Disch. : Velocity : 1.8 ~ 2.4 m/s, ΔP/100m : 0.92 kg/cm2

PATH2 Calculation :
-> No problem

PATH 2

GOVERNING

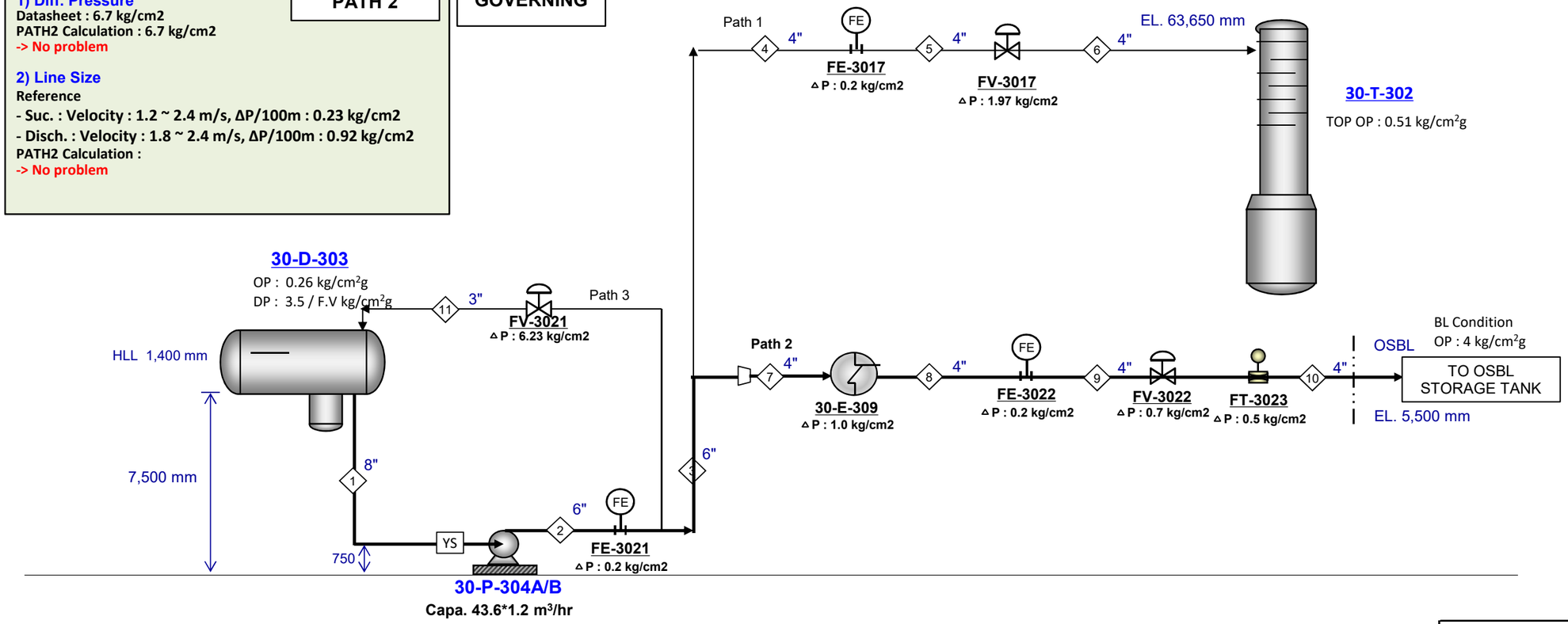

NOTE : 1. Assumed Data as below.
- Strainer △P = 0.07 kg/cm2
- Flowmeter △P = 0.2 kg/cm2

CV Input Data		
Item No.		
Des. Cap.		
Density		
D.P		
Char.		

PUMP CALCULATION

ITEM NUMBER	30-P-304A/B	
SUCTION		
Flow Rate	52.3	m3/hr
Operating Pres.	0.26	kg/cm².G
Design Pres.	3.5	kg/cm².G
Min. Static Head	7.5	meter
Max. Static Head	8.9	meter
Pump Shaft Level	0.75	meter
Vapor Pres.	0.606	kg/cm².A
Allowance	0	meter
Pipe Friction Loss	0.002	kg/cm²
Strainer	0.07	kg/cm²
Others		kg/cm²
Net Suction Pres.	0.66	kg/cm².G
Max. Suction Pres.	4.07	kg/cm².G
NPSH Available	15.52	meter
DISCHARGE		
Operating Pres.	4.0	kg/cm².G
Max. Static Head	5.5	meter
Pipe friction Loss	0.110	kg/cm².G
Pipe Gravity Loss	0.338	kg/cm³.G
Equip. Pres. Drop	1.9	kg/cm².G
Control Valves	0.7	kg/cm².G
Others	0.31	kg/cm².G
Disch. Press. Req'd	7.36	kg/cm².G
Diff. Pres.	6.70	kg/cm²
Diff. Head (Net)	96	meter
Hydr. Horsepower	9.5	KW
Est. Efficieny		%
Est. BHP		KW
Est. Shut-off Pres.	12.44	kg/cm².G
C.V dp / Friction	30.18	%

CONTROL VALVES

ITEM NO.	CAL. CV	RTD CV	% OPEN

		SUCTION			DISCHARGE																	
STREAM ID	UNIT	1			2	FE-3021	3	7	30-E-309	8	FE-3022	9	FV-3022	FT-3023	10							
Design Case																						
Phase		LIQUID			LIQUID		LIQUID	LIQUID		LIQUID		LIQUID			LIQUID							
Vapor Fraction																						
Normal Flow Rate	kg/hr	30,564			30,564		30,564	14,688		14,688		14,688			14,688							
Over Design	%	20			20		20	10		10		10			10							
Rated Flow Rate	kg/hr	36,676			36,676		36,676	16,157		16,157		16,157			16,157							
Temperature	°C	50.0			50.0		50.0	50.0		40.0		40.0			40.0							
Pressure @Inlet	kg/cm²G	0.26			7.36	7.35	7.15	7.15	7.14	6.14	6.13	5.93	5.92	5.22	4.72							
Pressure @Destination	kg/cm²G	0.66			7.35	7.15	7.15	7.14	6.14	6.13	5.93	5.92	5.22	4.72	4.31							
Line Size	inch	8			6		6	4		4		4			4							
Equivalent Length	M	32.5			15.3		23.0	21.8		29.1		7.3			189.2							
Elevation Change	M	-6.8			0.0		0.0	0.0		0.0		0.0			4.8							
Fluid, Density	kg/m³	701.0			701.0		701.0	701.0		711.9		711.9			711.9							
Fluid, Viscosity	cP	0.365			0.365		0.365	0.365		0.412		0.412			0.412							
Velocity	m/sec	0.45			0.78		0.78	0.78		0.77		0.77			0.77							
Pres. Drop by Friction	kg/cm²	0.002			0.004	0.000	0.006	0.009	0.000	0.012	0.000	0.003	0.000	0.000	0.077							
Pres. Drop by Gravity	kg/cm²	-0.473			0.000	0.000	0.000	0.000	0.000	0.000	0.000	0.000	0.000	0.000	0.338							
Pressure Drop / 100 M	kg/cm²	0.006			0.025		0.025	0.041		0.040		0.040			0.040							
Equipment Pres. Drop	kg/cm²	0.07				0.20			1.00		0.20			0.50								
CV PRESSURE DROP	kg/cm²												0.7									

LOTTE E&C 롯데건설주식회사	JOB NO.		PREPD BY: J.H.Kim	DATE: Sep. 26 '22	PAGE: 3 / 3	0
	SERVICE	EDC Reflux Pump (Path 3)	CHKD BY: J.H.Myung	APPD BY: J.Y.Kim		

*** Result**

PATH 3

1) Diff. Pressure

Datasheet : 6.7 kg/cm2
PATH2 Calculation : 6.7 kg/cm2
-> No problem

2) Line Size

Reference
- Suc. : Velocity : 1.2 ~ 2.4 m/s, ΔP/100m : 0.23 kg/cm2
- Disch. : Velocity : 1.8 ~ 2.4 m/s, ΔP/100m : 0.92 kg/cm2

PATH2 Calculation :
-> No problem

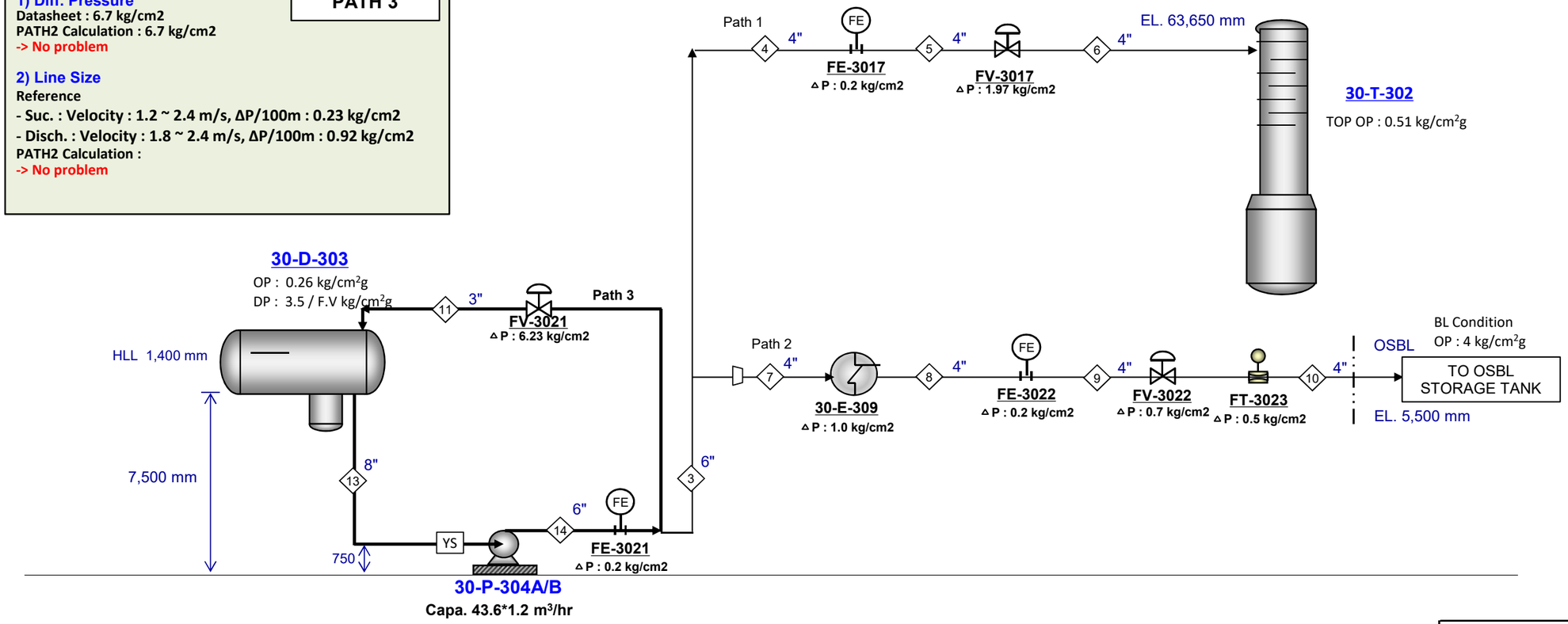

NOTE : 1. Assumed Data as below.
- Strainer △P = 0.07 kg/cm2
- Flowmeter △P = 0.2 kg/cm2

CV Input Data		
Item No.		
Des. Cap.		
Density		
D.P		
Char.		

PUMP CALCULATION		
ITEM NUMBER	30-P-304A/B	
SUCTION		
Flow Rate	52.3	m3/hr
Operating Pres.	0.26	kg/cm².G
Design Pres.	3.5	kg/cm².G
Min. Static Head	7.5	meter
Max. Static Head	8.9	meter
Pump Shaft Level	0.75	meter
Vapor Pres.	0.606	kg/cm².A
Allowance	0	meter
Pipe Friction Loss	0.000	kg/cm²
Strainer	0.07	kg/cm²
Others		kg/cm²
Net Suction Pres.	0.66	kg/cm².G
Max. Suction Pres.	4.07	kg/cm².G
NPSH Available	15.55	meter
DISCHARGE		
Operating Pres.	0.26	kg/cm².G
Max. Static Head	9.7	meter
Pipe friction Loss	0.048	kg/cm².G
Pipe Gravity Loss	0.627	kg/cm³.G
Equip. Pres. Drop	0.2	kg/cm².G
Control Valves	6.2	kg/cm².G
Others		kg/cm².G
Disch. Press. Req'd	7.36	kg/cm².G
Diff. Pres.	6.70	kg/cm²
Diff. Head (Net)	96	meter
Hydr. Horsepower	3.8	KW
Est. Efficieny		%
Est. BHP		KW
Est. Shut-off Pres.	12.45	kg/cm².G
C.V dp / Friction	2516.32	%

CONTROL VALVES			
ITEM NO.	CAL. CV	RTD CV	% OPEN

		SUCTION			DISCHARGE																	
STREAM ID	UNIT	13			14	FE-3021	FV-3021	11														
Design Case																						
Phase		LIQUID			LIQUID			LIQUID														
Vapor Fraction																						
Normal Flow Rate	kg/hr	14,721			14,721			14,721														
Over Design	%	0			0			0														
Rated Flow Rate	kg/hr	14,721			14,721			14,721														
Temperature	°C	50.0			50.0			50.0														
Pressure @Inlet	kg/cm²G	0.26			7.36	7.36	7.16	0.93														
Pressure @Destination	kg/cm²G	0.66			7.36	7.16	0.93	0.26														
Line Size	inch	8			6			3														
Equivalent Length	M	32.5			15.3			35.2														
Elevation Change	M	-6.8			0.0			9.0														
Fluid, Density	kg/m³	701.0			701.0			701.0														
Fluid, Viscosity	cP	0.365			0.365			0.365														
Velocity	m/sec	0.18			0.31			1.22														
Pres. Drop by Friction	kg/cm²	0.000			0.001	0.000	0.000	0.047														
Pres. Drop by Gravity	kg/cm²	-0.473			0.000	0.000	0.000	0.627														
Pressure Drop / 100 M	kg/cm²	0.001			0.004			0.133														
Equipment Pres. Drop	kg/cm²	0.07				0.20																
CV PRESSURE DROP	kg/cm²						6.23															

LINE IDENTIFICATION		1	2	3	4	5	6	7	8	9	10	11	12	13	14	15	16	17
SIMU. STREAM ID					Path 1			Path 2										
SERVICE					Pump DS * 51.9%			Pump DS * 48.1%				PUMP MIN. FLOW						
TYPE OF FLOW	(L/V/2PH)	LIQUID	LIQUID	LIQUID	LIQUID	LIQUID	LIQUID	LIQUID	LIQUID	LIQUID	LIQUID	LIQUID	LIQUID	LIQUID	LIQUID			
OPERATING CONDITION																		
Temperature	C	50	50	50	50	50	50	50	40	40	40	50	40	50	50			
Pressure @up	Kg/cm2.G																	
Pressure @down	Kg/cm2.G	0.47	0.00	-0.01	0.00	0.00	-4.46	-0.01	-0.01	0.00	-0.41	-0.67	-0.72	0.47	0.00			
PIPING INFORMATION																		
Nominal Size	inch	8.0	6.0	6.0	4.0	4.0	4.0	4.0	4.0	4.0	4.0	3.0	4.0	8.0	6.0			
Schedule or Class	-	40	40	40	40	40	40	40	40	40	40	40	40	40	40			
Line length,straight	m	25.0	10.0	15.0	5.0	5.0	80.0	15.0	20.0	5.0	130.0	25.0	51.8	25.0	10.0			
Eqivalent Length Over Design Factor	-	0.25	0.50	0.50	0.50	0.50	0.50	0.5	0.50	0.50	0.50	0.50	0.50	0.25	0.50			
Net Elevation Change	m	(6.8)	0.0	0.0	0.0	0.0	62.8	0.0	0.0	0.0	4.8	9.0	9.8	(6.8)	0.0			
Equivalent Length	m	32.5	15.3	23.0	7.3	7.3	116.4	21.8	29.1	7.3	189.2	35.2	75.3	32.5	15.3			
Pipe inside Dia.	m	0.203	0.154	0.154	0.102	0.102	0.102	0.102	0.102	0.102	0.102	0.078	0.102	0.203	0.154			
Wall Roughness	mm	0.046	0.046	0.046	0.046	0.046	0.046	0.046	0.046	0.046	0.046	0.046	0.046	0.046	0.046			
LIQUID PHASE CALCULATION																		
Flow Rate	Kg/h	30,564	30,564	30,564	15,871	15,871	15,871	14,688	14,688	14,688	14,688	14,721	14,688	14,721	14,721			
Flow Rate Design Margin	%	20	20	20	20	20	20	10	10	10	10	0	10	0	0			
Density @PT	Kg/m3	701.0	701.0	701.0	701.0	701.0	701.0	701.0	711.9	711.9	711.9	701.0	711.9	701.0	701.0			
Viscosity @PT	cP	0.365	0.365	0.365	0.365	0.365	0.365	0.365	0.412	0.412	0.412	0.365	0.412	0.365	0.365			
Surface Tension	dyn/cm																	
Flow Rate, rated	kg/h	36,676	36,676	36,676	19,045	19,045	19,045	16,157	16,157	16,157	16,157	14,721	16,157	14,721	14,721			
Vol. Flow	m3/hr	52.3	52.3	52.3	27.2	27.2	27.2	23.0	22.7	22.7	22.7	21.0	22.7	21.0	21.0			
Velocity	m/s	0.45	0.78	0.78	0.92	0.92	0.92	0.78	0.77	0.77	0.77	1.22	0.77	0.18	0.31			
Reynolds No	-	1.75E+05	2.31E+05	2.31E+05	1.80E+05	1.80E+05	1.80E+05	1.53E+05	1.36E+05	1.36E+05	1.36E+05	1.83E+05	1.36E+05	7.04E+04	9.26E+04			
Friction Factor	-	0.0176	0.0174	0.0174	0.0188	0.0188	0.0188	0.0191	0.0194	0.0194	0.0194	0.0194	0.0194	0.0203	0.0197			
Press. @Out	Kg/cm2.G	0.471	-0.004	-0.006	-0.004	-0.004	-4.463	-0.009	-0.012	-0.003	-0.415	-0.674	-0.725	0.473	-0.001			
Pressure Drop by Friction	Kg/cm2	0.0020	0.004	0.006	0.004	0.004	0.064	0.009	0.012	0.003	0.077	0.047	0.030	0.000	0.001			
Pressure Drop by Gravity	Kg/cm2	-0.473	0.000	0.000	0.000	0.000	4.399	0.000	0.000	0.000	0.338	0.627	0.694	-0.473	0.000			
Dp / 100 m (by friction)	Kg/cm2	0.0063	0.0246	0.0246	0.0553	0.0553	0.0553	0.0405	0.0405	0.0405	0.0405	0.1332	0.0405	0.0012	0.0045			
VAPOR PHASE CALCULATION																		
Flow Rate,max op	Kg/h																	
Flow Rate Design Margin	%																	
Density @PT	Kg/m3																	
or MW	(-)																	
Compr. Z	(-)																	
Viscosity @PT	cP																	
Flow Rate,rated	Kg/h																	
Vol. Flow @in	m3/sec																	
Gas Density @in	Kg/m3																	
Velocity @in	m/s																	
Reynolds No	-																	
Friction Factor	-																	
Gas Dns @Out	Kg/m3																	
Velocity @Out	m/s																	
Mach no. @Out	-																	
Press. @Out	Kg/cm2.G																	
Pressure Drop by Friction	Kg/cm2																	
Pressure Drop by Gravity	Kg/cm2																	
Dp / 100 m (by friction)	Kg/cm2																	

30-P-305A/B

LOTTE E&C 롯데건설주식회사	JOB NO.		PREPD BY: J.H.Kim	DATE: Sep. 26 '22	PAGE: 1 / 2	0
	SERVICE	EDC Water Pump (Path 1)	CHKD BY: J.H.Myung	APPD BY: J.Y.Kim		

*** Result**

1) Diff. Pressure

Datasheet : 1.98 kg/cm2
PATH1 Calculation : 1.98 kg/cm2
-> No problem

2) Line Size

Reference
- Suc. : Velocity : 1.2 ~ 2.4 m/s, ΔP/100m : 0.23 kg/cm2
- Disch. : Velocity : 1.5 ~ 2.4 m/s, ΔP/100m : 0.92 kg/cm2

PATH1 Calculation :
-> No problem

PATH 1

GOVERNING

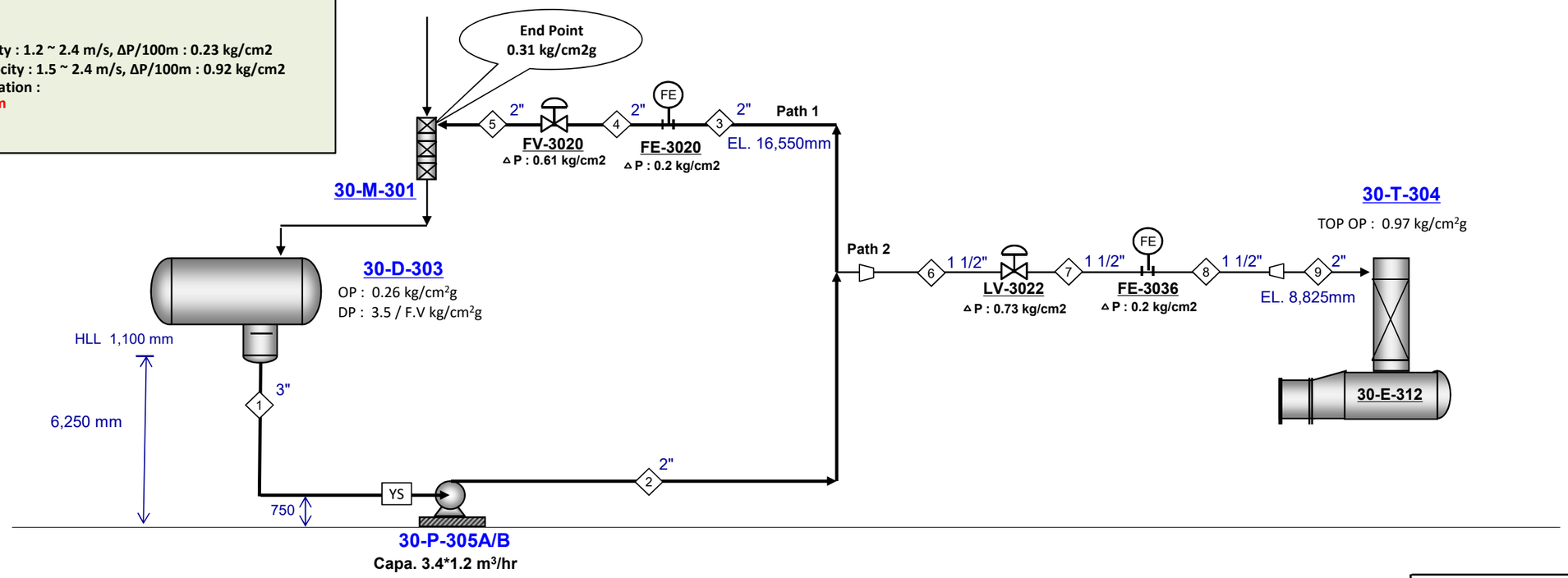

NOTE : 1. Assumed Data as below.
- Strainer △P = 0.07 kg/cm2
- Flowmeter △P = 0.2 kg/cm2

CV Input Data		
Item No.		
Des. Cap.		
Density		
D.P		
Char.		

PUMP CALCULATION		
ITEM NUMBER	**30-P-305A/B**	
SUCTION		
Flow Rate	4.1	m3/hr
Operating Pres.	0.26	kg/cm².G
Design Pres.	3.5	kg/cm².G
Min. Static Head	6.25	meter
Max. Static Head	7.35	meter
Pump Shaft Level	0.75	meter
Vapor Pres.	0.747	kg/cm².A
Allowance	0	meter
Pipe Friction Loss	0.003	kg/cm²
Strainer	0.07	kg/cm²
Others		kg/cm²
Net Suction Pres.	0.73	kg/cm².G
Max. Suction Pres.	4.15	kg/cm².G
NPSH Available	10.29	meter
DISCHARGE		
Operating Pres.	0.31	kg/cm².G
Max. Static Head	16.6	meter
Pipe friction Loss	0.028	kg/cm².G
Pipe Gravity Loss	1.558	kg/cm³.G
Equip. Pres. Drop	0.2	kg/cm².G
Control Valves	0.6	kg/cm².G
Others		kg/cm².G
Disch. Press. Req'd	2.71	kg/cm².G
Diff. Pres.	1.98	kg/cm²
Diff. Head (Net)	20	meter
Hydr. Horsepower	0.2	KW
Est. Efficieny		%
Est. BHP		KW
Est. Shut-off Pres.	6.62	kg/cm².G
C.V dp / Friction	267.21	%

CONTROL VALVES

ITEM NO.	CAL. CV	RTD CV	% OPEN

		SUCTION			DISCHARGE																	
STREAM ID	UNIT	1			2	3	FE-3020	4	FV-3020	5												
Design Case																						
Phase		LIQUID			LIQUID	LIQUID		LIQUID		LIQUID												
Vapor Fraction																						
Normal Flow Rate	kg/hr	3,365			3,365	2,500		2,500		2,500												
Over Design	%	20			20	20		20		20												
Rated Flow Rate	kg/hr	4,038			4,038	3,000		3,000		3,000												
Temperature	°C	50.0			50.0	50.0		50.0		50.0												
Pressure @Inlet	kg/cm²G	0.26			2.71	2.70	2.69	2.49	2.49	1.88												
Pressure @Destination	kg/cm²G	0.73			2.70	2.69	2.49	2.49	1.88	0.31												
Line Size	inch	3			2	2		2		2												
Equivalent Length	M	36.1			13.5	13.5		6.8		34.5												
Elevation Change	M	-5.5			0.0	0.0		0.0		15.8												
Fluid, Density	kg/m³	986.3			986.3	986.3		986.3		986.3												
Fluid, Viscosity	cP	0.544			0.544	0.544		0.544		0.544												
Velocity	m/sec	0.24			0.53	0.39		0.39		0.39												
Pres. Drop by Friction	kg/cm²	0.003			0.008	0.005	0.000	0.002	0.000	0.012												
Pres. Drop by Gravity	kg/cm²	-0.542			0.000	0.000	0.000	0.000	0.000	1.558												
Pressure Drop / 100 M	kg/cm²	0.009			0.063	0.036		0.036		0.036												
Equipment Pres. Drop	kg/cm²	0.07					0.20															
CV PRESSURE DROP	kg/cm²								0.61													

LOTTE E&C 롯데건설주식회사	JOB NO.		PREPD BY: J.H.Kim	DATE: Sep. 26 '22	PAGE: 2 / 2	0
	SERVICE	EDC Water Pump (Path 2)	CHKD BY: J.H.Myung	APPD BY: J.Y.Kim		

*** Result**

1) Diff. Pressure

PATH 2

Datasheet : 1.98 kg/cm2
PATH2 Calculation : 1.98 kg/cm2
-> No problem

2) Line Size

Reference
- Suc. : Velocity : 1.2 ~ 2.4 m/s, ΔP/100m : 0.23 kg/cm2
- Disch. : Velocity : 1.5 ~ 2.4 m/s, ΔP/100m : 0.92 kg/cm2

PATH2 Calculation :
-> No problem

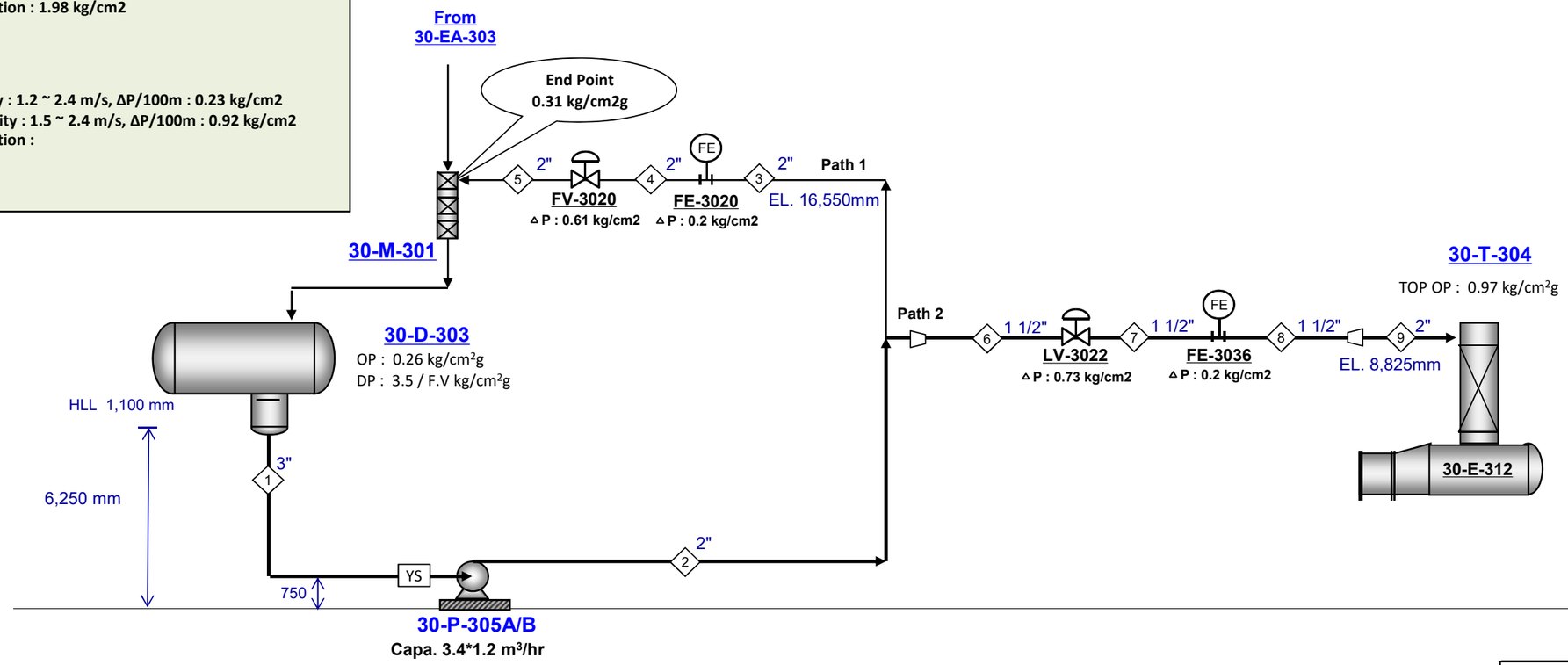

NOTE : 1. Assumed Data as below.
- Strainer △P = 0.07 kg/cm2
- Flowmeter △P = 0.2 kg/cm2

CV Input Data		
Item No.		
Des. Cap.		
Density		
D.P		
Char.		

PUMP CALCULATION		
ITEM NUMBER	**30-P-305A/B**	
SUCTION		
Flow Rate	4.1	m3/hr
Operating Pres.	0.26	kg/cm².G
Design Pres.	3.5	kg/cm².G
Min. Static Head	6.25	meter
Max. Static Head	7.35	meter
Pump Shaft Level	0.75	meter
Vapor Pres.	0.747	kg/cm².A
Allowance	0	meter
Pipe Friction Loss	0.003	kg/cm²
Strainer	0.07	kg/cm²
Others		kg/cm²
Net Suction Pres.	0.73	kg/cm².G
Max. Suction Pres.	4.15	kg/cm².G
NPSH Available	10.29	meter
DISCHARGE		
Operating Pres.	0.97	kg/cm².G
Max. Static Head	8.8	meter
Pipe friction Loss	0.016	kg/cm².G
Pipe Gravity Loss	0.796	kg/cm³.G
Equip. Pres. Drop	0.2	kg/cm².G
Control Valves	0.7	kg/cm².G
Others		kg/cm².G
Disch. Press. Req'd	2.71	kg/cm².G
Diff. Pres.	1.98	kg/cm²
Diff. Head (Net)	20	meter
Hydr. Horsepower	0.2	KW
Est. Efficieny		%
Est. BHP		KW
Est. Shut-off Pres.	6.63	kg/cm².G
C.V dp / Friction	337.95	%

CONTROL VALVES			
ITEM NO.	CAL. CV	RTD CV	% OPEN

		SUCTION			DISCHARGE																	
STREAM ID	UNIT	1			2	6	LV-3022	7	FE-3036	8	9											
Design Case																						
Phase		LIQUID			LIQUID	LIQUID		LIQUID		LIQUID	LIQUID											
Vapor Fraction																						
Normal Flow Rate	kg/hr	3,365			3,365	865		865		865	865											
Over Design	%	20			20	20		20		20	20											
Rated Flow Rate	kg/hr	4,038			4,038	1,038		1,038		1,038	1,038											
Temperature	°C	50.0			50.0	50.0		50.0		50.0	50.0											
Pressure @Inlet	kg/cm²G	0.26			2.71	2.70	2.70	1.97	1.97	1.77	0.97											
Pressure @Destination	kg/cm²G	0.73			2.70	2.70	1.97	1.97	1.77	0.97	0.97											
Line Size	inch	3			2	1.5		1.5		1.5	2											
Equivalent Length	M	36.1			13.5	13.2		6.6		20.4	6.8											
Elevation Change	M	-5.5			0.0	0.0		0.0		8.1	0.0											
Fluid, Density	kg/m³	986.3			986.3	986.3		986.3		986.3	986.3											
Fluid, Viscosity	cP	0.544			0.544	0.544		0.544		0.544	0.544											
Velocity	m/sec	0.24			0.53	0.22		0.22		0.22	0.14											
Pres. Drop by Friction	kg/cm²	0.003			0.008	0.002	0.000	0.001	0.000	0.004	0.000											
Pres. Drop by Gravity	kg/cm²	-0.542			0.000	0.000	0.000	0.000	0.000	0.796	0.000											
Pressure Drop / 100 M	kg/cm²	0.009			0.063	0.018		0.018		0.018	0.005											
Equipment Pres. Drop	kg/cm²	0.07							0.20													
CV PRESSURE DROP	kg/cm²						0.73															

LINE IDENTIFICATION		1	2	3	4	5	6	7	8	9	10	11	12	13	14	15	16	17
SIMU. STREAM ID				Path 1			Path 2											
SERVICE				Pump DS * 74.3%			Pump DS * 25.7%											
TYPE OF FLOW	(L/V/2PH)	LIQUID	LIQUID	LIQUID	LIQUID	LIQUID	LIQUID	LIQUID	LIQUID	LIQUID								
OPERATING CONDITION																		
Temperature	C	50	50	50	50	50	50	50	50	50								
Pressure @up	Kg/cm2.G																	
Pressure @down	Kg/cm2.G	0.54	-0.01	0.00	0.00	-1.57	0.00	0.00	-0.80	0.00								
PIPING INFORMATION																		
Nominal Size	inch	3.0	2.0	2.0	2.0	2.0	1.5	1.5	1.5	2.0								
Schedule or Class	-	40	40	40	40	40	40	40	40	40								
Line length,straight	m	30.0	10.0	10.0	5.0	25.5	10.0	5.0	15.5	5.0								
Eqivalent Length Over Design Factor	-	0.25	0.50	0.50	0.50	0.50	0.50	0.50	0.50	0.50								
Net Elevation Change	m	(5.5)	0.0	0.0	0.0	15.8	0.0	0.0	8.1	0.0								
Equivalent Length	m	36.1	13.5	13.5	6.8	34.5	13.2	6.6	20.4	6.8								
Pipe inside Dia.	m	0.078	0.053	0.053	0.053	0.053	0.041	0.041	0.041	0.053								
Wall Roughness	mm	0.046	0.046	0.046	0.046	0.046	0.046	0.046	0.046	0.046								
LIQUID PHASE CALCULATION																		
Flow Rate	Kg/h	3,365	3,365	2,500	2,500	2,500	865	865	865	865								
Flow Rate Design Margin	%	20	20	20	20	20	20	20	20	20								
Density @PT	Kg/m3	986.3	986.3	986.3	986.3	986.3	986.3	986.3	986.3	986.3								
Viscosity @PT	cP	0.544	0.544	0.544	0.544	0.544	0.544	0.544	0.544	0.544								
Surface Tension	dyn/cm																	
Flow Rate, rated	kg/h	4,038	4,038	3,000	3,000	3,000	1,038	1,038	1,038	1,038								
Vol. Flow	m3/hr	4.1	4.1	3.0	3.0	3.0	1.1	1.1	1.1	1.1								
Velocity	m/s	0.24	0.53	0.39	0.39	0.39	0.22	0.22	0.22	0.14								
Reynolds No	-	3.37E+04	5.00E+04	3.72E+04	3.72E+04	3.72E+04	1.65E+04	1.65E+04	1.65E+04	1.29E+04								
Friction Factor	-	0.0245	0.0237	0.0248	0.0248	0.0248	0.0293	0.0293	0.0293	0.0304								
Press. @Out	Kg/cm2.G	0.539	-0.008	-0.005	-0.002	-1.571	-0.002	-0.001	-0.800	0.000								
Pressure Drop by Friction	Kg/cm2	0.0032	0.008	0.005	0.002	0.012	0.002	0.001	0.004	0.000								
Pressure Drop by Gravity	Kg/cm2	-0.542	0.000	0.000	0.000	1.558	0.000	0.000	0.796	0.000								
Dp / 100 m (by friction)	Kg/cm2	0.0090	0.0626	0.0362	0.0362	0.0362	0.0178	0.0178	0.0178	0.0053								
VAPOR PHASE CALCULATION																		
Flow Rate,max op	Kg/h																	
Flow Rate Design Margin	%																	
Density @PT	Kg/m3																	
or MW	(-)																	
Compr. Z	(-)																	
Viscosity @PT	cP																	
Flow Rate,rated	Kg/h																	
Vol. Flow @in	m3/sec																	
Gas Density @in	Kg/m3																	
Velocity @in	m/s																	
Reynolds No	-																	
Friction Factor	-																	
Gas Dns @Out	Kg/m3																	
Velocity @Out	m/s																	
Mach no. @Out	-																	
Press. @Out	Kg/cm2.G																	
Pressure Drop by Friction	Kg/cm2																	
Pressure Drop by Gravity	Kg/cm2																	
Dp / 100 m (by friction)	Kg/cm2																	

30-P-306A/B

LOTTE E&C 롯데건설주식회사	JOB NO.		PREPD BY:	J.H.Kim	DATE:	Sep. 26 '22	PAGE:	1 / 2	0
	SERVICE	EDC Bottoms Pump	CHKD BY:	J.H.Myung	APPD BY:	J.Y.Kim			

*** Result**

1) Diff. Pressure

Datasheet : 2.71 kg/cm2
Calculation : 2.71 kg/cm2
-> No problem

2) Line Size

Referece
- Suc. : Velocity : 1.2 ~ 2.4 m/s, ΔP/100m : 0.23 kg/cm2
- Disch. : Velocity : 3.0 ~ 4.6 m/s, ΔP/100m : 0.46 kg/cm2

Calculation :
-> No problem

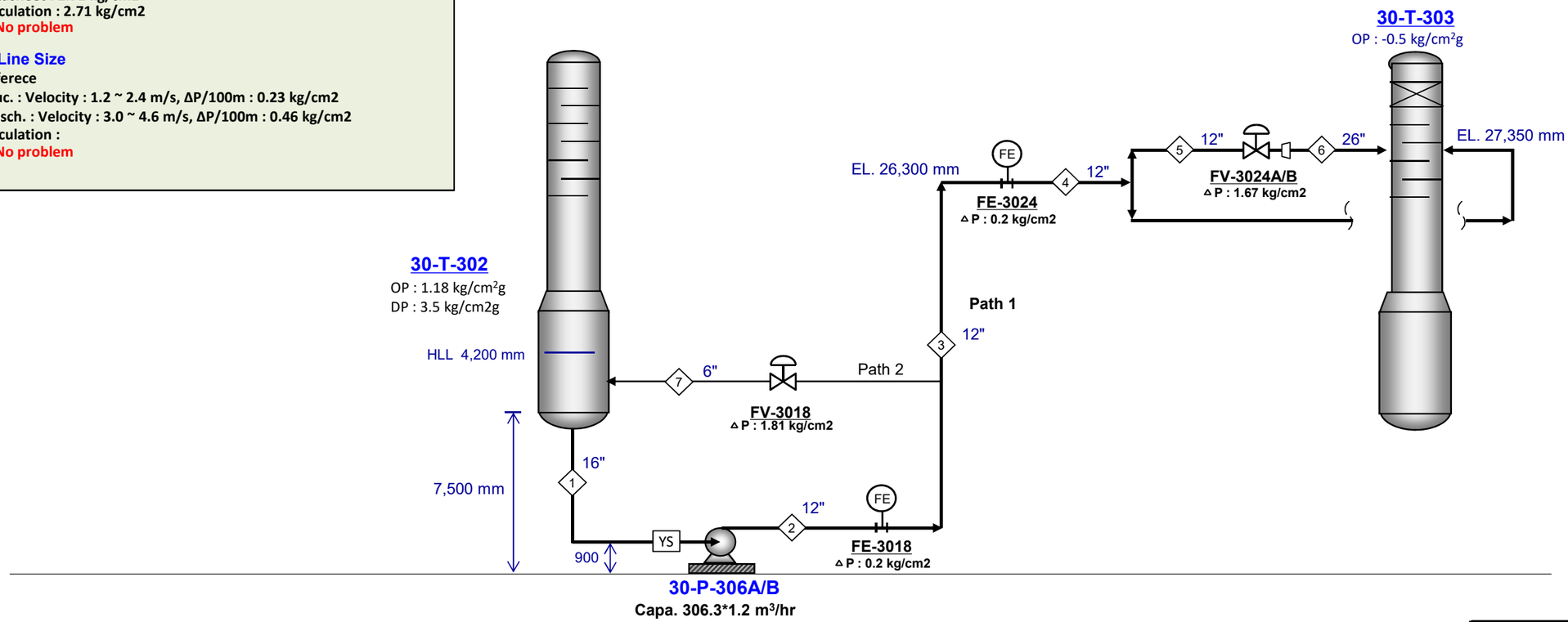

NOTE : 1. Assumed Data as below.
- Strainer △P = 0.07 kg/cm2
- Flowmeter △P = 0.2 kg/cm2

CV Input Data		
Item No.		
Des. Cap.		
Density		
D.P		
Char.		

PUMP CALCULATION

ITEM NUMBER	30-P-306A/B	
SUCTION		
Flow Rate	368.1	m3/hr
Operating Pres.	1.18	kg/cm².G
Design Pres.	3.50	kg/cm².G
Min. Static Head	7.5	meter
Max. Static Head	11.7	meter
Pump Shaft Level	0.9	meter
Vapor Pres.	2.21	kg/cm².A
Allowance	0	meter
Pipe Friction Loss	0.006	kg/cm²
Strainer	0.07	kg/cm²
Others		kg/cm²
Net Suction Pres.	1.82	kg/cm².G
Max. Suction Pres.	4.67	kg/cm².G
NPSH Available	5.90	meter
DISCHARGE		
Operating Pres.	-0.50	kg/cm².G
Max. Static Head	27.4	meter
Pipe friction Loss	0.089	kg/cm².G
Pipe Gravity Loss	2.866	kg/cm³.G
Equip. Pres. Drop	0.4	kg/cm².G
Control Valves	1.7	kg/cm².G
Others		kg/cm².G
Disch. Press. Req'd	4.52	kg/cm².G
Diff. Pres.	2.71	kg/cm²
Diff. Head (Net)	25	meter
Hydr. Horsepower	27.1	KW
Est. Efficieny		%
Est. BHP		KW
Est. Shut-off Pres.	8.05	kg/cm².G
C.V dp / Friction	341.66	%

CONTROL VALVES

ITEM NO.	CAL. CV	RTD CV	% OPEN

		SUCTION			DISCHARGE																	
STREAM ID	UNIT	1			2	FE-3018	3	FE-3024	4	5	FV-3024A/B	6										
Design Case																						
Phase		LIQUID			LIQUID		LIQUID		LIQUID	LIQUID		2PH										
Vapor Fraction												0.099										
Normal Flow Rate	kg/hr	332,287			332,287		331,836		331,836	165,918		165,918										
Over Design	%	20			20		20		20	20		20										
Rated Flow Rate	kg/hr	398,745			398,745		398,203		398,203	199,102		199,102										
Temperature	°C	151.0			151.0		151.0		151.0	151.0		129.3										
Pressure @Inlet	kg/cm²G	1.18			4.52	4.52	4.32	1.38	1.18	1.17	1.17	-0.50										
Pressure @Destination	kg/cm²G	1.82			4.52	4.32	1.38	1.18	1.17	1.17	-0.50	-0.50										
Line Size	inch	16			12		12		12	12		26										
Equivalent Length	M	35.0			17.1		130.7		8.5	8.5		10.0										
Elevation Change	M	-6.6			0.0		26.5		0.0	0.0		0.0										
Fluid, Density	kg/m³	1,083.3			1,083.5		1,083.5		1,083.5	1,083.5		139.8										
Fluid, Viscosity	cP	1.046			1.044		1.044		1.044	1.044												
Velocity	m/sec	0.85			1.42		1.41		1.41	0.71												
Pres. Drop by Friction	kg/cm²	0.006			0.009	0.000	0.072	0.000	0.005	0.001	0.000	0.001										
Pres. Drop by Gravity	kg/cm²	-0.715			0.000	0.000	2.866	0.000	0.000	0.000	0.000	0.000										
Pressure Drop / 100 M	kg/cm²	0.016			0.055		0.055		0.055	0.015		0.012										
Equipment Pres. Drop	kg/cm²	0.07				0.20		0.20														
CV PRESSURE DROP	kg/cm²										1.67											

LOTTE E&C 롯데건설주식회사	JOB NO.		PREPD BY:	J.H.Kim	DATE:	Sep. 26 '22	PAGE:	2 / 2	0
	SERVICE	EDC Bottoms Pump	CHKD BY:	J.H.Myung	APPD BY:	J.Y.Kim			

*** Result**

1) Diff. Pressure

Datasheet : 2.71 kg/cm2
Calculation : 2.71 kg/cm2
-> No problem

2) Line Size

Referece
- Suc. : Velocity : 1.2 ~ 2.4 m/s, ΔP/100m : 0.23 kg/cm2
- Disch. : Velocity : 3.0 ~ 4.6 m/s, ΔP/100m : 0.46 kg/cm2

Calculation :
-> No problem

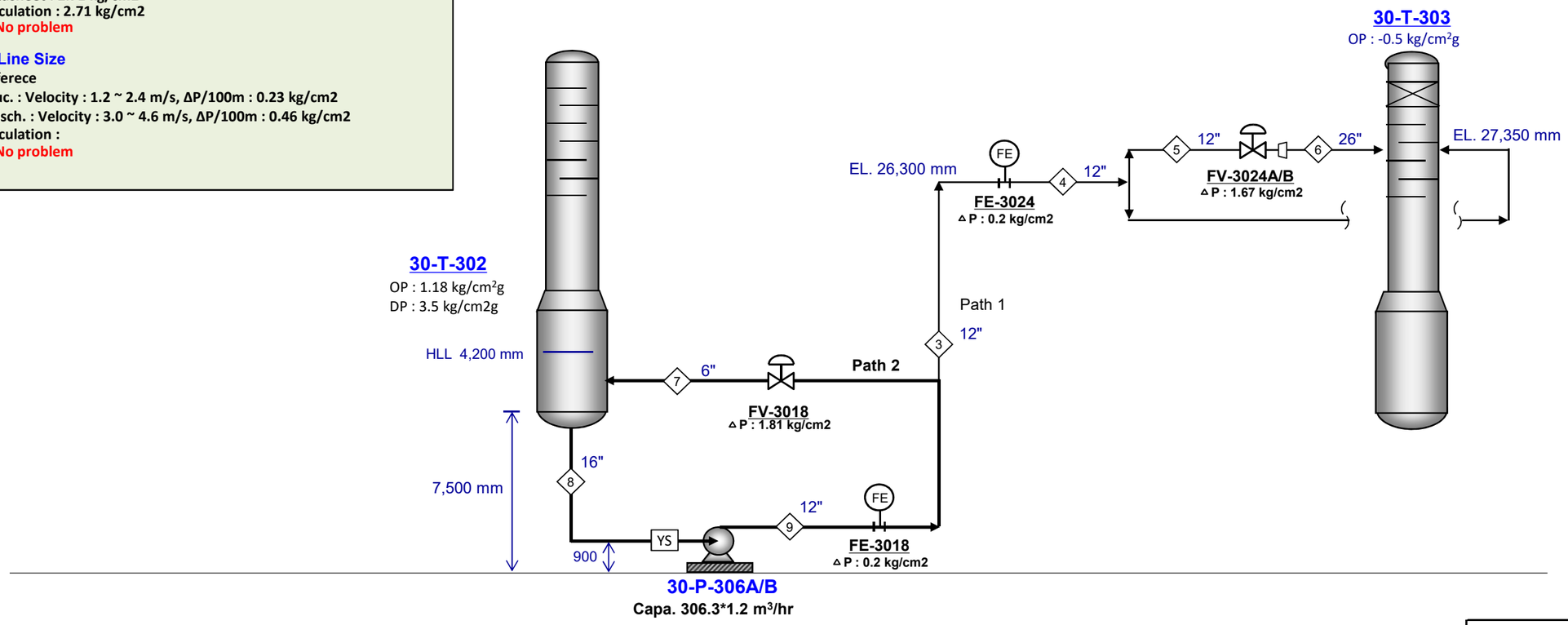

PUMP CALCULATION		
ITEM NUMBER	30-P-306A/B	
SUCTION		
Flow Rate	368.1	m3/hr
Operating Pres.	1.18	kg/cm².G
Design Pres.	3.50	kg/cm².G
Min. Static Head	7.5	meter
Max. Static Head	11.7	meter
Pump Shaft Level	0.9	meter
Vapor Pres.	2.21	kg/cm².A
Allowance	0	meter
Pipe Friction Loss	0.002	kg/cm²
Strainer	0.07	kg/cm²
Others		kg/cm²
Net Suction Pres.	1.82	kg/cm².G
Max. Suction Pres.	4.67	kg/cm².G
NPSH Available	5.94	meter
DISCHARGE		
Operating Pres.	1.18	kg/cm².G
Max. Static Head	11.7	meter
Pipe friction Loss	0.171	kg/cm².G
Pipe Gravity Loss	1.170	kg/cm³.G
Equip. Pres. Drop	0.2	kg/cm².G
Control Valves	1.8	kg/cm².G
Others		kg/cm².G
Disch. Press. Req'd	4.53	kg/cm².G
Diff. Pres.	2.71	kg/cm²
Diff. Head (Net)	25	meter
Hydr. Horsepower	13.5	KW
Est. Efficieny		%
Est. BHP		KW
Est. Shut-off Pres.	8.05	kg/cm².G
C.V dp / Friction	488.53	%

NOTE : 1. Assumed Data as below.
- Strainer △P = 0.07 kg/cm2
- Flowmeter △P = 0.2 kg/cm2

CV Input Data		
Item No.		
Des. Cap.		
Density		
D.P		
Char.		

CONTROL VALVES

ITEM NO.	CAL. CV	RTD CV	% OPEN

		SUCTION			DISCHARGE																	
STREAM ID	UNIT	8			9	FE-3018	FV-3018	7														
Design Case																						
Phase		LIQUID			LIQUID			LIQUID														
Vapor Fraction																						
Normal Flow Rate	kg/hr	198,244			198,244			198,244														
Over Design	%	0			0			0														
Rated Flow Rate	kg/hr	198,244			198,244			198,244														
Temperature	°C	151.0			151.0			151.0														
Pressure @Inlet	kg/cm²G	1.18			4.53	4.53	4.33	2.52														
Pressure @Destination	kg/cm²G	1.82			4.53	4.33	2.52	1.18														
Line Size	inch	16			12			6														
Equivalent Length	M	35.0			17.1			38.3														
Elevation Change	M	-6.6			0.0			10.8														
Fluid, Density	kg/m³	1,083.3			1,083.3			1,083.3														
Fluid, Viscosity	cP	1.046			1.046			1.046														
Velocity	m/sec	0.42			0.70			2.73														
Pres. Drop by Friction	kg/cm²	0.002			0.003	0.000	0.000	0.168														
Pres. Drop by Gravity	kg/cm²	-0.715			0.000	0.000	0.000	1.170														
Pressure Drop / 100 M	kg/cm²	0.004			0.015			0.438														
Equipment Pres. Drop	kg/cm²	0.07				0.20																
CV PRESSURE DROP	kg/cm²						1.81															

LINE IDENTIFICATION		1	2	3	4	5	6	7	8	9	10	11	12	13	14	15	16	17
SIMU. STREAM ID																		
SERVICE								PUMP MIN. FLOW										
TYPE OF FLOW	(L/V/2PH)	LIQUID	LIQUID	LIQUID	LIQUID	LIQUID	2PH	LIQUID	LIQUID	LIQUID								
OPERATING CONDITION																		
Temperature	C	151	151	151	151	151	129	151	151	151								
Pressure @up	Kg/cm2.G						-0.51											
Pressure @down	Kg/cm2.G	0.71	-0.01	-2.94	0.00	0.00	-0.51	-1.34	0.71	0.00								
PIPING INFORMATION																		
Nominal Size	inch	16.0	12.0	12.0	12.0	12.0	26.0	6.0	16.0	12.0								
Schedule or Class	-	20	40	40	40	40	20	40	20	40								
Line length,straight	m	25.0	10.0	76.5	5.0	5.0	5.0	25.0	25.0	10.0								
Eqivalent Length Over Design Factor	-	0.25	0.50	0.50	0.50	0.50	0.50	0.5	0.25	0.50								
Net Elevation Change	m	(6.6)	0.0	26.5	0.0	0.0	0.0	10.8	(6.6)	0.0								
Equivalent Length	m	35.0	17.1	130.7	8.5	8.5	10.0	38.3	35.0	17.1								
Pipe inside Dia.	m	0.391	0.303	0.303	0.303	0.303	0.635	0.154	0.391	0.303								
Wall Roughness	mm	0.046	0.046	0.046	0.046	0.046	0.046	0.046	0.046	0.046								
LIQUID PHASE CALCULATION																		
Flow Rate	Kg/h	332,287	332,287	331,836	331,836	165,918	149,527	198,244	198,244	198,244								
Flow Rate Design Margin	%	20	20	20	20	20	20	0	0	0								
Density @PT	Kg/m3	1083.3	1083.5	1083.5	1083.5	1083.5	1149.6	1083.3	1083.3	1083.3								
Viscosity @PT	cP	1.046	1.044	1.044	1.044	1.044	1.627	1.046	1.046	1.046								
Surface Tension	dyn/cm						26.9											
Flow Rate, rated	kg/h	398,745	398,745	398,203	398,203	199,102	179,432	198,244	198,244	198,244								
Vol. Flow	m3/hr	368.1	368.0	367.5	367.5	183.8	156.1	183.0	183.0	183.0								
Velocity	m/s	0.85	1.42	1.41	1.41	0.71	0.14	2.73	0.42	0.70								
Reynolds No	-	3.45E+05	4.45E+05	4.45E+05	4.45E+05	2.22E+05	6.14E+04	4.35E+05	1.72E+05	2.21E+05								
Friction Factor	-	0.0153	0.0152	0.0152	0.0152	0.0165	0.0203	0.0164	0.0169	0.0165								
Press. @Out	Kg/cm2.G	0.709	-0.009	-2.938	-0.005	-0.001	-0.510	-1.338	0.713	-0.003								
Pressure Drop by Friction	Kg/cm2	0.0055	0.009	0.072	0.005	0.001	0.000	0.168	0.002	0.003								
Pressure Drop by Gravity	Kg/cm2	-0.715	0.000	2.866	0.000	0.000		1.170	-0.715	0.000								
Dp / 100 m (by friction)	Kg/cm2	0.0158	0.0553	0.0552	0.0552	0.0150		0.4382	0.0043	0.0149								
VAPOR PHASE CALCULATION																		
Flow Rate,max op	Kg/h						16,391											
Flow Rate Design Margin	%						20											
Density @PT	Kg/m3						1.20											
or MW	(-)																	
Compr. Z	(-)																	
Viscosity @PT	cP						0.010											
Flow Rate,rated	Kg/h						19,669											
Vol. Flow @in	m3/sec						4.55											
Gas Density @in	Kg/m3						1.20											
Velocity @in	m/s						14.38											
Reynolds No	-						1.10E+06											
Friction Factor	-						0.0129											
Gas Dns @Out	Kg/m3						1.199											
Velocity @Out	m/s						14.384											
Mach no. @Out	-						0.059											
Press. @Out	Kg/cm2.G						-0.510											
Pressure Drop by Friction	Kg/cm2						0.000											
Pressure Drop by Gravity	Kg/cm2																	
Dp / 100 m (by friction)	Kg/cm2																	

LINE IDENTIFICATION		1	2	3	4	5	6	7	8	9	10	11	12	13	14	15	16	17
TWO-PHASE CALCULATION METHOD SELECTION							DuklerII											
TWO-PHASE CALCULATION (HTFS)																		
Vapor Flow rate @ outlet	Kg/hr						19,669											
Upward Angle	deg																	
C factor							17.240											
Liquid + Vapor density	Kg/m3						152.956											
Mach No.							0.221											
Slip Ratio							15.990											
Void Fraction							0.868											
Pressure Drop by Acceleration							0.000											
Pressure Drop by Friction	Kg/cm2						0.002											
Pres. Drop by Gravity	Kg/cm2						0.000											
TWO-PHASE CALCULATION (Homogeneous)																		
Bulk density	Kg/m3						10.03											
Bulk viscosity, centipoise	cP						0.025											
Velocity, m/sec	m/s						14.514											
Reynolds number	-						3.66E+06											
Friction factor	-						0.012											
Pressure Drop by Friction	Kg/cm2						0.002											
Pressure Drop by Gravity	Kg/cm2						0.000											
TWO-PHASE CALCULATION (Dukler)																		
In-place density	Kg/m3						139.82											
Reynolds number	-						7.98E+05											
Friction factor	-						0.013											
Pressure Drop by Friction	Kg/cm2						0.001											
Pressure Drop by Gravity	Kg/cm2						0.000											
Press. @Out	Kg/cm2.G						-0.511											
Press. Drop	Kg/cm2						0.001											
FLOW REGIME FOR VERTICAL																		
Simpson	X-Axis(Xd)						0.000											
	Y-Axis(Fr)						0.186											
	Flow Regime						Intermit											
Griffith and Wallies	X-Axis						33.83											
	Y-Axis						0.99											
	Flow Regime						Annular Mist											
Taitel and Dukler	Flow Regime						Annular											
(1) Bubble-Slug	X-Axis						116.89											
Annular trans	Y-Axis						0.01											
(2) Slug-Chum	X-Axis						5.82											
Transition	Y-Axis						0.99											
	2ph Re no.						6.51E+06											
(3) Annular-Churn	X-Axis						0.37											
Slug Trans.	Y-Axis						3.78											
FLOW REGIME FOR HORIZONTAL																		
Taitel and Dukler	X-Axis(Xp)						0.37											
	Y-Axis(Fr)						0.19											
	Y-Axis(Xt)						0.02											
	Y-Axis(Xk)						46.16											
	Flow Regime						Stratified											
Baker	X-Axis						28.39											
	Y-Axis						11845											
	Flow Regime						Annular											

30-P-307A/B

LOTTE E&C 롯데건설주식회사	JOB NO.		PREPD BY: J.H.Kim	DATE: Sep. 26 '22	PAGE: 1 / 3	0
	SERVICE	SRC Reflux Pump (Path 1)	CHKD BY: J.H.Myung	APPD BY: J.Y.Kim		

*** Result**

1) Diff. Pressure

PATH 1

GOVERNING

Datasheet : 5.85 kg/cm2
PATH1 Calculation : 5.84 kg/cm2
-> No problem

2) Line Size

Referece
- Suc. : Velocity : 1.2 ~ 2.4 m/s, ΔP/100m : 0.23 kg/cm2
- Disch. : Velocity : 2.4 ~ 3.0 m/s, ΔP/100m : 0.92 kg/cm2

PATH1 Calculation :
-> No problem

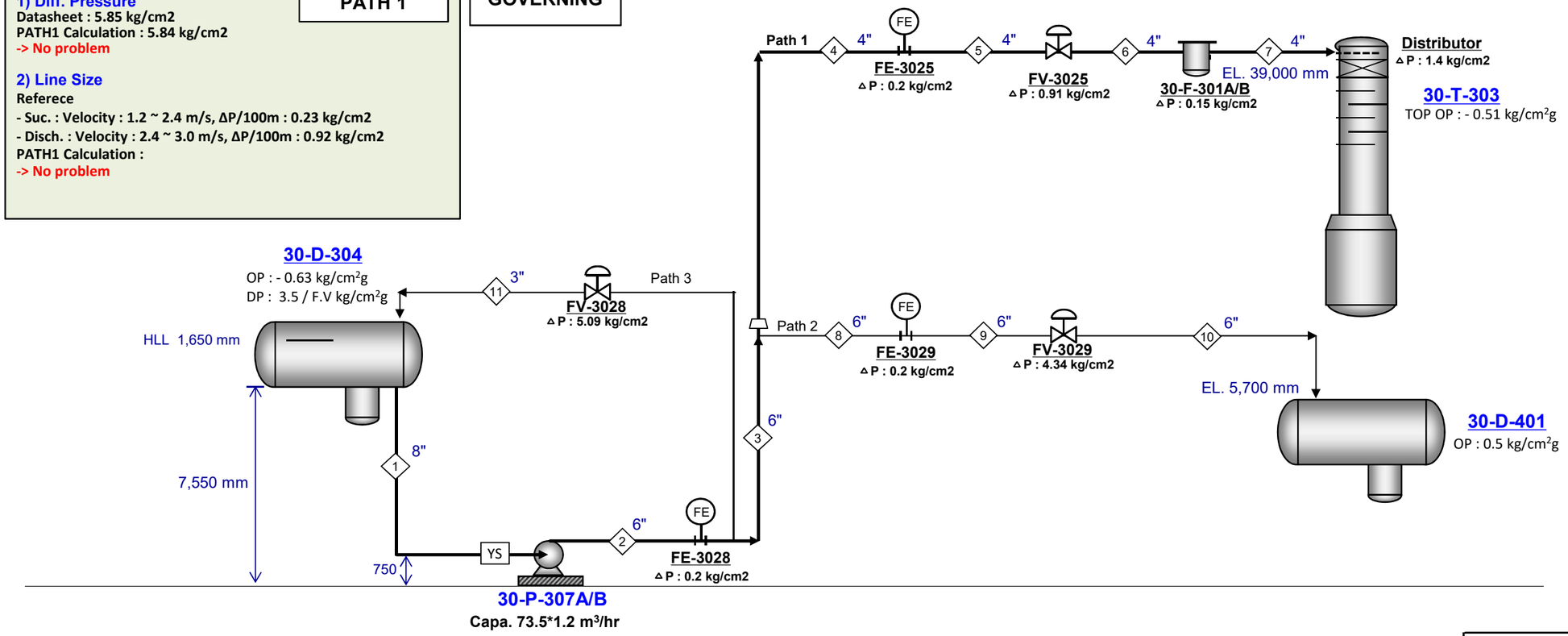

NOTE : 1. Assumed Data as below.
- Strainer △P = 0.07 kg/cm2
- Flowmeter △P = 0.2 kg/cm2
- Distributor △P = 1.4 kg/cm2

PUMP CALCULATION		
ITEM NUMBER	30-P-307A/B	
SUCTION		
Flow Rate	88.2	m3/hr
Operating Pres.	-0.63	kg/cm².G
Design Pres.	3.5	kg/cm².G
Min. Static Head	7.55	meter
Max. Static Head	9.2	meter
Pump Shaft Level	0.75	meter
Vapor Pres.	0.283	kg/cm².A
Allowance	0	meter
Pipe Friction Loss	0.009	kg/cm²
Strainer	0.07	kg/cm²
Others		kg/cm²
Net Suction Pres.	-0.13	kg/cm².G
Max. Suction Pres.	4.23	kg/cm².G
NPSH Available	7.27	meter
DISCHARGE		
Operating Pres.	-0.51	kg/cm².G
Max. Static Head	39.0	meter
Pipe friction Loss	0.087	kg/cm².G
Pipe Gravity Loss	3.282	kg/cm³.G
Equip. Pres. Drop	2.0	kg/cm².G
Control Valves	0.9	kg/cm².G
Others		kg/cm².G
Disch. Press. Req'd	5.72	kg/cm².G
Diff. Pres.	5.84	kg/cm²
Diff. Head (Net)	68	meter
Hydr. Horsepower	14.0	KW
Est. Efficieny		%
Est. BHP		KW
Est. Shut-off Pres.	11.53	kg/cm².G
C.V dp / Friction	44.68	%

CV Input Data		
Item No.		
Des. Cap.		
Density		
D.P		
Char.		

CONTROL VALVES			
ITEM NO.	CAL. CV	RTD CV	% OPEN

		SUCTION			DISCHARGE																	
STREAM ID	UNIT	1			2	FE-3028	3	4	FE-3025	5	FV-3025	6	30-F-301A/B	7	Distributor							
Design Case																						
Phase		LIQUID			LIQUID		LIQUID	LIQUID		LIQUID		LIQUID		LIQUID								
Vapor Fraction																						
Normal Flow Rate	kg/hr	63,031			63,031		63,031	18,909		18,909		18,909		18,909								
Over Design	%	20			20		20	20		20		20		20								
Rated Flow Rate	kg/hr	75,637			75,637		75,637	22,691		22,691		22,691		22,691								
Temperature	°C	40.0			40.0		40.0	40.0		40.0		40.0		40.0								
Pressure @Inlet	kg/cm²G	-0.63			5.72	5.71	5.51	5.51	5.49	5.29	5.29	4.38	4.37	4.22	0.89							
Pressure @Destination	kg/cm²G	-0.13			5.71	5.51	5.51	5.49	5.29	5.29	4.38	4.37	4.22	0.89	-0.51							
Line Size	inch	8			6		6	4		4		4		4								
Equivalent Length	M	45.5			7.7		7.7	21.8		7.3		14.6		70.2								
Elevation Change	M	-6.8			0.0		0.0	0.0		0.0		0.0		38.3								
Fluid, Density	kg/m³	858.0			858.0		858.0	858.0		858.0		858.0		858.0								
Fluid, Viscosity	cP	0.49			0.49		0.49	0.49		0.49		0.49		0.49								
Velocity	m/sec	0.76			1.31		1.31	0.89		0.89		0.89		0.89								
Pres. Drop by Friction	kg/cm²	0.009			0.006	0.000	0.006	0.014	0.000	0.005	0.000	0.009	0.000	0.046	0.000							
Pres. Drop by Gravity	kg/cm²	-0.579			0.000	0.000	0.000	0.000	0.000	0.000	0.000	0.000	0.000	3.282	0.000							
Pressure Drop / 100 M	kg/cm²	0.021			0.082		0.082	0.065		0.065		0.065		0.065								
Equipment Pres. Drop	kg/cm²	0.07				0.20			0.20				0.15		1.40							
CV PRESSURE DROP	kg/cm²										0.91											

LOTTE E&C 롯데건설주식회사	JOB NO.		PREPD BY:	J.H.Kim	DATE:	Sep. 26 '22	PAGE:	2 / 3	0
	SERVICE	SRC Reflux Pump (Path 2)	CHKD BY:	J.H.Myung	APPD BY:	J.Y.Kim			

*** Result**

PATH 2

1) Diff. Pressure

Datasheet : 5.85 kg/cm2
PATH2 Calculation : 5.84 kg/cm2
-> No problem

2) Line Size

Referece
- Suc. : Velocity : 1.2 ~ 2.4 m/s, ΔP/100m : 0.23 kg/cm2
- Disch. : Velocity : 2.4 ~ 3.0 m/s, ΔP/100m : 0.92 kg/cm2

PATH2 Calculation :
-> No problem

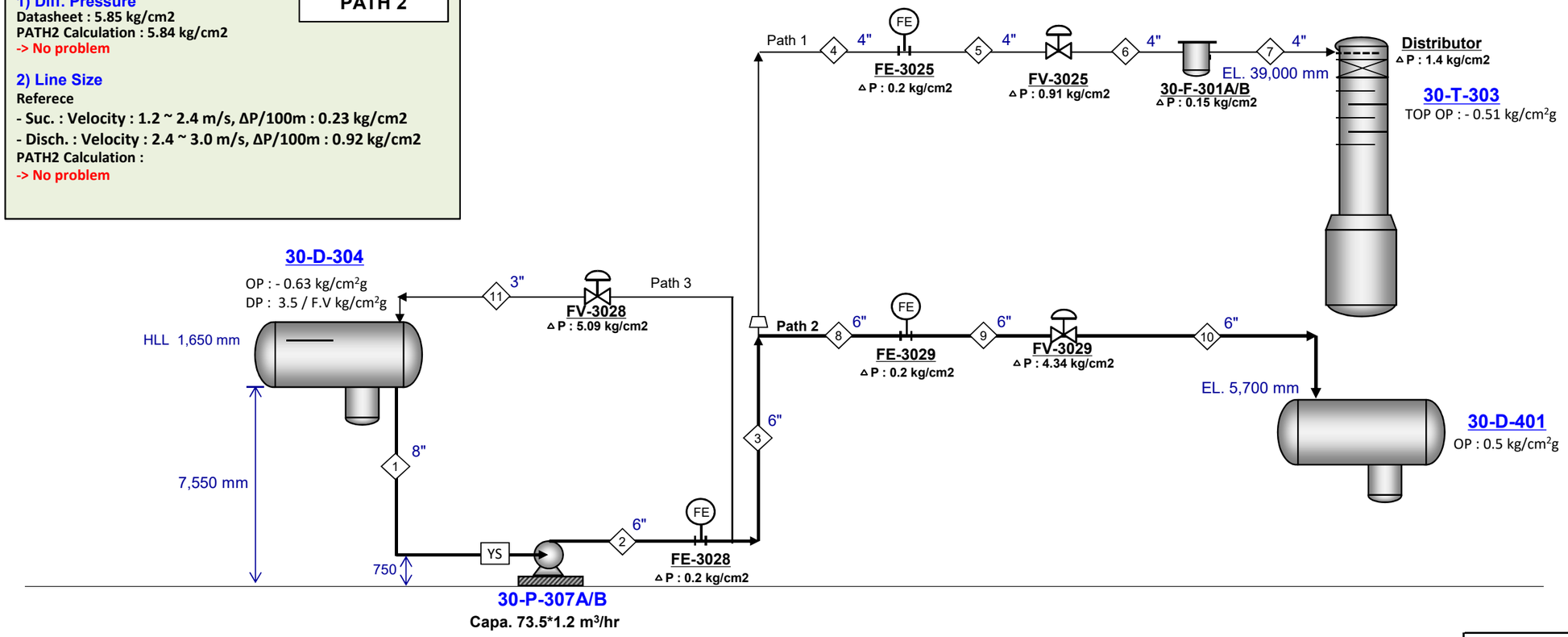

NOTE : 1. Assumed Data as below.
- Strainer △P = 0.07 kg/cm2
- Flowmeter △P = 0.2 kg/cm2

CV Input Data		
Item No.		
Des. Cap.		
Density		
D.P		
Char.		

PUMP CALCULATION

ITEM NUMBER	30-P-307A/B	
SUCTION		
Flow Rate	88.2	m3/hr
Operating Pres.	-0.63	kg/cm².G
Design Pres.	3.5	kg/cm².G
Min. Static Head	7.55	meter
Max. Static Head	9.2	meter
Pump Shaft Level	0.75	meter
Vapor Pres.	0.283	kg/cm².A
Allowance	0	meter
Pipe Friction Loss	0.009	kg/cm²
Strainer	0.07	kg/cm²
Others		kg/cm²
Net Suction Pres.	-0.13	kg/cm².G
Max. Suction Pres.	4.23	kg/cm².G
NPSH Available	7.27	meter
DISCHARGE		
Operating Pres.	0.5	kg/cm².G
Max. Static Head	5.7	meter
Pipe friction Loss	0.051	kg/cm².G
Pipe Gravity Loss	0.425	kg/cm³.G
Equip. Pres. Drop	0.4	kg/cm².G
Control Valves	4.3	kg/cm².G
Others		kg/cm².G
Disch. Press. Req'd	5.72	kg/cm².G
Diff. Pres.	5.84	kg/cm²
Diff. Head (Net)	68	meter
Hydr. Horsepower	14.0	KW
Est. Efficieny		%
Est. BHP		KW
Est. Shut-off Pres.	11.53	kg/cm².G
C.V dp / Friction	962.89	%

CONTROL VALVES

ITEM NO.	CAL. CV	RTD CV	% OPEN

		SUCTION			DISCHARGE																	
STREAM ID	UNIT	1			2	FE-3028	3	8	FE-3029	9	FV-3029	10										
Design Case																						
Phase		LIQUID			LIQUID		LIQUID	LIQUID		LIQUID		LIQUID										
Vapor Fraction																						
Normal Flow Rate	kg/hr	63,031			63,031		63,031	44,122		44,122		44,122										
Over Design	%	20			20		20	20		20		20										
Rated Flow Rate	kg/hr	75,637			75,637		75,637	52,946		52,946		52,946										
Temperature	°C	40.0			40.0		40.0	40.0		40.0		40.0										
Pressure @Inlet	kg/cm²G	-0.63			5.72	5.71	5.51	5.50	5.48	5.28	5.28	0.94										
Pressure @Destination	kg/cm²G	-0.13			5.71	5.51	5.50	5.48	5.28	5.28	0.94	0.50										
Line Size	inch	8			6		6	6		6		6										
Equivalent Length	M	45.5			7.7		7.7	46.0		7.7		38.2										
Elevation Change	M	-6.8			0.0		0.0	0.0		0.0		5.0										
Fluid, Density	kg/m³	858.0			858.0		858.0	858.0		858.0		858.0										
Fluid, Viscosity	cP	0.49			0.49		0.49	0.49		0.49		0.49										
Velocity	m/sec	0.76			1.31		1.31	0.92		0.92		0.92										
Pres. Drop by Friction	kg/cm²	0.009			0.006	0.000	0.006	0.019	0.000	0.003	0.000	0.016										
Pres. Drop by Gravity	kg/cm²	-0.579			0.000	0.000	0.000	0.000	0.000	0.000	0.000	0.425										
Pressure Drop / 100 M	kg/cm²	0.021			0.082		0.082	0.042		0.042		0.042										
Equipment Pres. Drop	kg/cm²	0.07				0.20			0.20													
CV PRESSURE DROP	kg/cm²										4.34											

LOTTE E&C 롯데건설주식회사	JOB NO.		PREPD BY: J.H.Kim	DATE: Sep. 26 '22	PAGE: 3 / 3	0
	SERVICE	SRC Reflux Pump (Path 3)	CHKD BY: J.H.Myung	APPD BY: J.Y.Kim		

*** Result**

PATH 3

1) Diff. Pressure

Datasheet : 5.85 kg/cm2
PATH1 Calculation : 5.83 kg/cm2
-> No problem

2) Line Size

Referece
- Suc. : Velocity : 1.2 ~ 2.4 m/s, ΔP/100m : 0.23 kg/cm2
- Disch. : Velocity : 2.4 ~ 3.0 m/s, ΔP/100m : 0.92 kg/cm2

PATH1 Calculation :
-> No problem

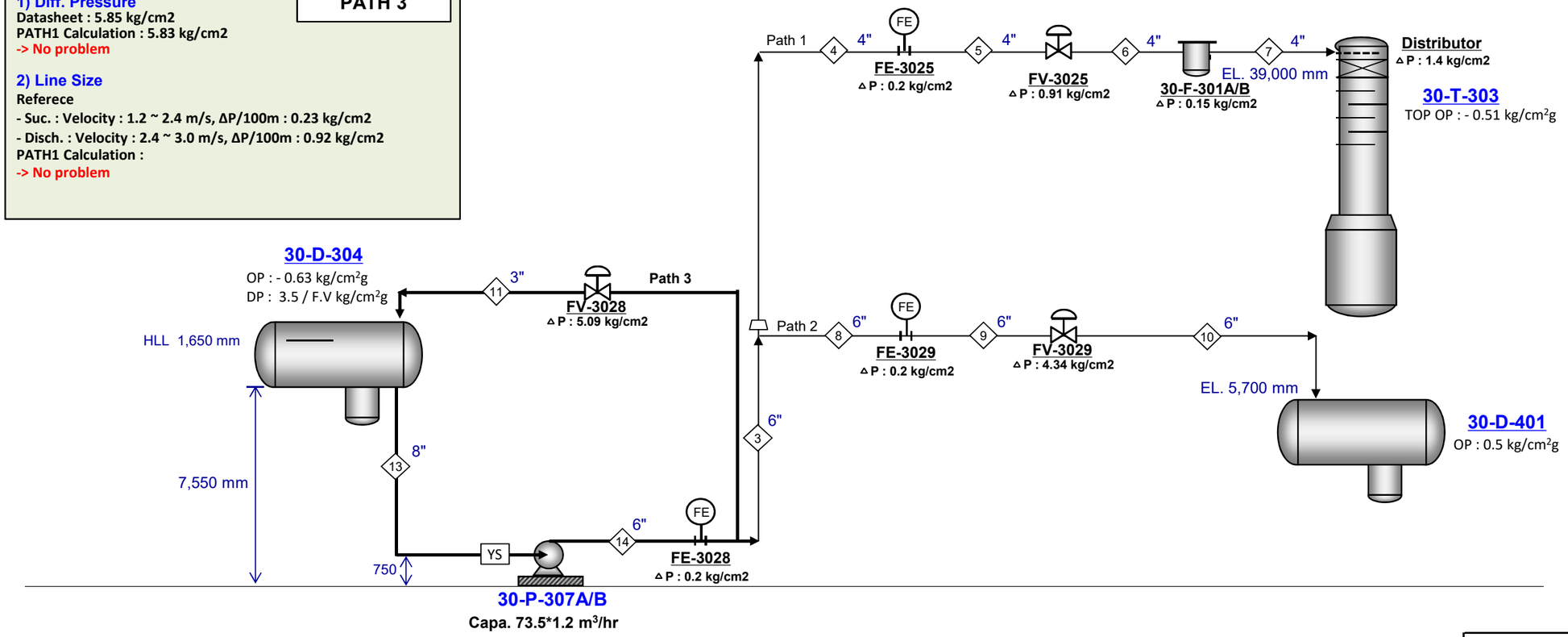

NOTE : 1. Assumed Data as below.
- Strainer △P = 0.07 kg/cm2
- Flowmeter △P = 0.2 kg/cm2

CV Input Data		
Item No.		
Des. Cap.		
Density		
D.P		
Char.		

PUMP CALCULATION		
ITEM NUMBER	**30-P-307A/B**	
SUCTION		
Flow Rate	88.2	m3/hr
Operating Pres.	-0.63	kg/cm².G
Design Pres.	3.5	kg/cm².G
Min. Static Head	7.55	meter
Max. Static Head	9.2	meter
Pump Shaft Level	0.75	meter
Vapor Pres.	0.283	kg/cm².A
Allowance	0	meter
Pipe Friction Loss	0.002	kg/cm²
Strainer	0.07	kg/cm²
Others		kg/cm²
Net Suction Pres.	-0.12	kg/cm².G
Max. Suction Pres.	4.23	kg/cm².G
NPSH Available	7.36	meter
DISCHARGE		
Operating Pres.	-0.63	kg/cm².G
Max. Static Head	10.1	meter
Pipe friction Loss	0.255	kg/cm².G
Pipe Gravity Loss	0.798	kg/cm³.G
Equip. Pres. Drop	0.2	kg/cm².G
Control Valves	5.1	kg/cm².G
Others		kg/cm².G
Disch. Press. Req'd	5.71	kg/cm².G
Diff. Pres.	5.83	kg/cm²
Diff. Head (Net)	68	meter
Hydr. Horsepower	6.0	KW
Est. Efficieny		%
Est. BHP		KW
Est. Shut-off Pres.	11.51	kg/cm².G
C.V dp / Friction	1119.54	%

CONTROL VALVES			
ITEM NO.	CAL. CV	RTD CV	% OPEN

		SUCTION			DISCHARGE																	
STREAM ID	UNIT	13			14	FE-3028	FV-3028	11														
Design Case																						
Phase		LIQUID			LIQUID			LIQUID														
Vapor Fraction																						
Normal Flow Rate	kg/hr	32,604			32,604			32,604														
Over Design	%	0			0			0														
Rated Flow Rate	kg/hr	32,604			32,604			32,604														
Temperature	°C	40.0			40.0			40.0														
Pressure @Inlet	kg/cm²G	-0.63			5.71	5.71	5.51	0.42														
Pressure @Destination	kg/cm²G	-0.12			5.71	5.51	0.42	-0.63														
Line Size	inch	8			6			3														
Equivalent Length	M	45.5			7.7			49.3														
Elevation Change	M	-6.8			0.0			9.3														
Fluid, Density	kg/m³	858.0			858.0			858.0														
Fluid, Viscosity	cP	0.49			0.49			0.49														
Velocity	m/sec	0.33			0.57			2.21														
Pres. Drop by Friction	kg/cm²	0.002			0.001	0.000	0.000	0.253														
Pres. Drop by Gravity	kg/cm²	-0.579			0.000	0.000	0.000	0.798														
Pressure Drop / 100 M	kg/cm²	0.004			0.017			0.514														
Equipment Pres. Drop	kg/cm²	0.07				0.20																
CV PRESSURE DROP	kg/cm²						5.09															

LINE IDENTIFICATION		1	2	3	4	5	6	7	8	9	10	11	12	13	14	15	16	17
SIMU. STREAM ID					Path 1				Path 2									
SERVICE					Pump DS * 30%				Pump DS * 70%			PUMP MIN. FLOW						
TYPE OF FLOW	(L/V/2PH)	LIQUID	LIQUID	LIQUID	LIQUID	LIQUID	LIQUID	LIQUID	LIQUID	LIQUID	LIQUID	LIQUID	LIQUID	LIQUID	LIQUID			
OPERATING CONDITION																		
Temperature	C	40	40	40	40	40	40	40	40	40	40	40	40	40	40			
Pressure @up	Kg/cm2.G																	
Pressure @down	Kg/cm2.G	0.57	-0.01	-0.01	-0.01	0.00	-0.01	-3.33	-0.02	0.00	-0.44	-1.05	-0.87	0.58	0.00			
PIPING INFORMATION																		
Nominal Size	inch	8.0	6.0	6.0	4.0	4.0	4.0	4.0	6.0	6.0	6.0	3.0	6.0	8.0	6.0			
Schedule or Class	-	40	40	40	40	40	40	40	40	40	40	40	40	40	40			
Line length,straight	m	35.0	5.0	5.0	15.0	5.0	10.0	48.3	30.0	5.0	25.0	35.0	79.8	35.0	5.0			
Eqivalent Length Over Design Factor	-	0.25	0.50	0.50	0.50	0.50	0.50	0.50	0.5	0.50	0.50	0.50	0.50	0.25	0.50			
Net Elevation Change	m	(6.8)	0.0	0.0	0.0	0.0	0.0	38.3	0.0	0.0	5.0	9.3	9.8	(6.8)	0.0			
Equivalent Length	m	45.5	7.7	7.7	21.8	7.3	14.6	70.2	46.0	7.7	38.2	49.3	122.3	45.5	7.7			
Pipe inside Dia.	m	0.203	0.154	0.154	0.102	0.102	0.102	0.102	0.154	0.154	0.154	0.078	0.154	0.203	0.154			
Wall Roughness	mm	0.046	0.046	0.046	0.046	0.046	0.046	0.046	0.046	0.046	0.046	0.046	0.046	0.046	0.046			
LIQUID PHASE CALCULATION																		
Flow Rate	Kg/h	63,031	63,031	63,031	18,909	18,909	18,909	18,909	44,122	44,122	44,122	32,604	44,122	32,604	32,604			
Flow Rate Design Margin	%	20	20	20	20	20	20	20	20	20	20	0	0	0	0			
Density @PT	Kg/m3	858.0	858.0	858.0	858.0	858.0	858.0	858.0	858.0	858.0	858.0	858.0	858.0	858.0	858.0			
Viscosity @PT	cP	0.490	0.490	0.490	0.490	0.490	0.490	0.490	0.490	0.490	0.490	0.490	0.490	0.490	0.490			
Surface Tension	dyn/cm																	
Flow Rate, rated	kg/h	75,637	75,637	75,637	22,691	22,691	22,691	22,691	52,946	52,946	52,946	32,604	44,122	32,604	32,604			
Vol. Flow	m3/hr	88.2	88.2	88.2	26.4	26.4	26.4	26.4	61.7	61.7	61.7	38.0	51.4	38.0	38.0			
Velocity	m/s	0.76	1.31	1.31	0.89	0.89	0.89	0.89	0.92	0.92	0.92	2.21	0.77	0.33	0.57			
Reynolds No	-	2.69E+05	3.54E+05	3.54E+05	1.60E+05	1.60E+05	1.60E+05	1.60E+05	2.48E+05	2.48E+05	2.48E+05	3.02E+05	2.07E+05	1.16E+05	1.53E+05			
Friction Factor	-	0.0166	0.0167	0.0167	0.0190	0.0190	0.0190	0.0190	0.0173	0.0173	0.0173	0.0187	0.0176	0.0187	0.0183			
Press. @Out	Kg/cm2.G	0.570	-0.006	-0.006	-0.014	-0.005	-0.009	-3.327	-0.019	-0.003	-0.441	-1.051	-0.873	0.577	-0.001			
Pressure Drop by Friction	Kg/cm2	0.0094	0.006	0.006	0.014	0.005	0.009	0.046	0.019	0.003	0.016	0.253	0.036	0.002	0.001			
Pressure Drop by Gravity	Kg/cm2	-0.579	0.000	0.000	0.000	0.000	0.000	3.282	0.000	0.000	0.425	0.798	0.837	-0.579	0.000			
Dp / 100 m (by friction)	Kg/cm2	0.0207	0.0819	0.0819	0.0650	0.0650	0.0650	0.0650	0.0415	0.0415	0.0415	0.5140	0.0294	0.0043	0.0167			
VAPOR PHASE CALCULATION																		
Flow Rate,max op	Kg/h																	
Flow Rate Design Margin	%																	
Density @PT	Kg/m3																	
or MW	(-)																	
Compr. Z	(-)																	
Viscosity @PT	cP																	
Flow Rate,rated	Kg/h																	
Vol. Flow @in	m3/sec																	
Gas Density @in	Kg/m3																	
Velocity @in	m/s																	
Reynolds No	-																	
Friction Factor	-																	
Gas Dns @Out	Kg/m3																	
Velocity @Out	m/s																	
Mach no. @Out	-																	
Press. @Out	Kg/cm2.G																	
Pressure Drop by Friction	Kg/cm2																	
Pressure Drop by Gravity	Kg/cm2																	
Dp / 100 m (by friction)	Kg/cm2																	

30-P-308A/B

LOTTE E&C 롯데건설주식회사	JOB NO.		PREPD BY: J.H.Kim	DATE: Sep. 26 '22	PAGE: 1 / 2	0
	SERVICE	SRC Water Pump (PATH1)	CHKD BY: J.H.Myung	APPD BY: J.Y.Kim		

*** Result**

1) Diff. Pressure

Datasheet : 2.0 kg/cm2
Calculation : 2.0 kg/cm2
-> No problem

2) Line Size

Reference
- Suc. : Velocity : 1.2 ~ 2.4 m/s, ΔP/100m : 0.23 kg/cm2
- Disch. : Velocity : 1.8 ~ 2.4 m/s, ΔP/100m : 0.92 kg/cm2

Calculation :
-> No problem

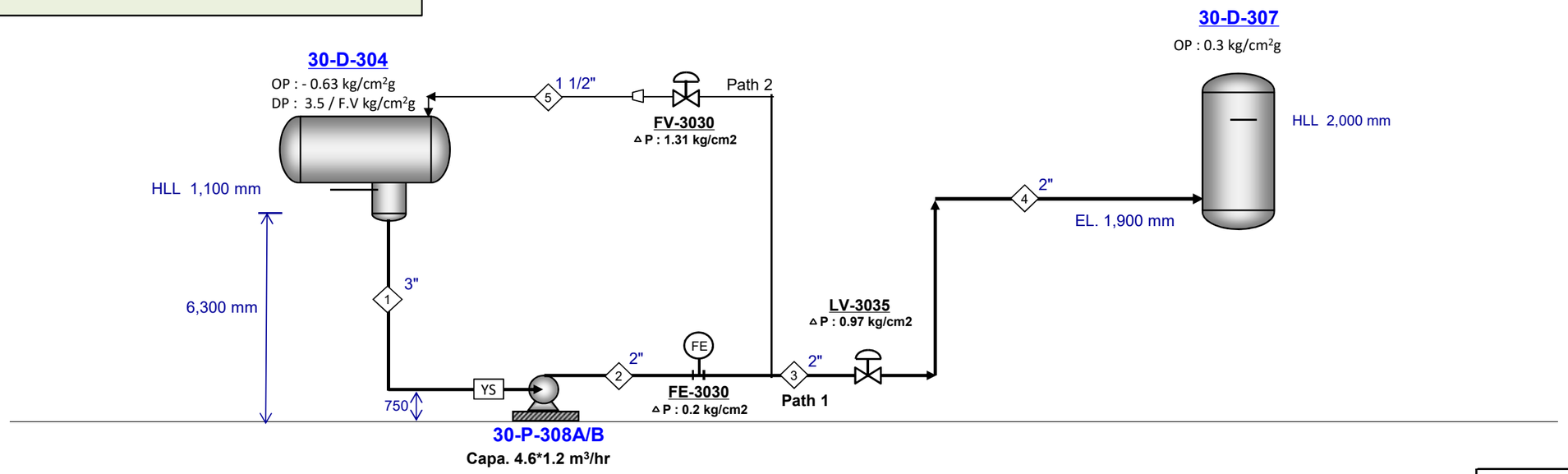

NOTE : 1. Assumed Data as below.
- Strainer △P = 0.07 kg/cm2
- Flowmeter △P = 0.2kg/cm2

CV Input Data		
Item No.		
Des. Cap.		
Density		
D.P		
Char.		

PUMP CALCULATION

ITEM NUMBER	30-P-308A/B	
SUCTION	30-D-304	
Flow Rate	5.6	m3/hr
Operating Pres.	-0.63	kg/cm².G
Design Pres.	3.5	kg/cm².G
Min. Static Head	6.3	meter
Max. Static Head	7.4	meter
Pump Shaft Level	0.75	meter
Vapor Pres.	0.32	kg/cm².A
Allowance	0	meter
Pipe Friction Loss	0.008	kg/cm²
Strainer	0.07	kg/cm²
Others		kg/cm²
Net Suction Pres.	-0.16	kg/cm².G
Max. Suction Pres.	4.16	kg/cm².G
NPSH Available	5.60	meter
DISCHARGE	30-D-307	
Operating Pres.	0.3	kg/cm².G
Max. Static Head	3.9	meter
Pipe friction Loss	0.059	kg/cm².G
Pipe Gravity Loss	0.312	kg/cm².G
Equip. Pres. Drop	0.2	kg/cm².G
Control Valves	1.0	kg/cm².G
Others		kg/cm².G
Disch. Press. Req'd	1.84	kg/cm².G
Diff. Pres.	2.00	kg/cm²
Diff. Head (Net)	20.2	meter
Hydr. Horsepower	0.3	KW
Est. Efficieny		%
Est. BHP		KW
Est. Shut-off Pres.	6.66	kg/cm².G
C.V dp / Friction	374.33	%

CONTROL VALVES

ITEM NO.	CAL. CV	RTD CV	% OPEN

		SUCTION			DISCHARGE				
STREAM ID	UNIT	1			2	FE-3030	3	LV-3035	4
Design Case									
Phase		LIQUID			LIQUID		LIQUID		LIQUID
Vapor Fraction									
Normal Flow Rate	kg/hr	4,603			4,603		4,603		4,603
Over Design	%	20			20		20		20
Rated Flow Rate	kg/hr	5,524			5,524		5,524		5,524
Temperature	°C	40.0			40.0		40.0		40.0
Pressure @Inlet	kg/cm²G	-0.63			1.84	1.83	1.63	1.62	0.65
Pressure @Destination	kg/cm²G	-0.16			1.83	1.63	1.62	0.65	0.30
Line Size	inch	3			2		2		2
Equivalent Length	M	48.2			13.5		6.8		31.3
Elevation Change	M	-5.6			0.0		0.0		3.2
Fluid, Density	kg/m³	990.0			990.0		990.0		990.0
Fluid, Viscosity	cP	0.65			0.65		0.65		0.65
Velocity	m/sec	0.32			0.72		0.72		0.72
Pres. Drop by Friction	kg/cm²	0.008			0.015	0.000	0.008	0.000	0.036
Pres. Drop by Gravity	kg/cm²	-0.549			0.000	0.000	0.000	0.000	0.312
Pressure Drop / 100 M	kg/cm²	0.016			0.115		0.115		0.115
Equipment Pres. Drop	kg/cm²	0.07				0.20			
CV PRESSURE DROP	kg/cm²							0.97	

LOTTE E&C 롯데건설주식회사	JOB NO.		PREPD BY:	J.H.Kim	DATE:	Sep. 26 '22	PAGE:	2 / 2	0
	SERVICE	SRC Water Pump (PATH2)	CHKD BY:	J.H.Myung	APPD BY:	J.Y.Kim			

*** Result**

1) Diff. Pressure

Datasheet : 2.0 kg/cm2
Calculation : 2.0 kg/cm2
-> No problem

2) Line Size

Reference
- Suc. : Velocity : 1.2 ~ 2.4 m/s, ΔP/100m : 0.23 kg/cm2
- Disch. : Velocity : 1.8 ~ 2.4 m/s, ΔP/100m : 0.92 kg/cm2

Calculation :
-> No problem

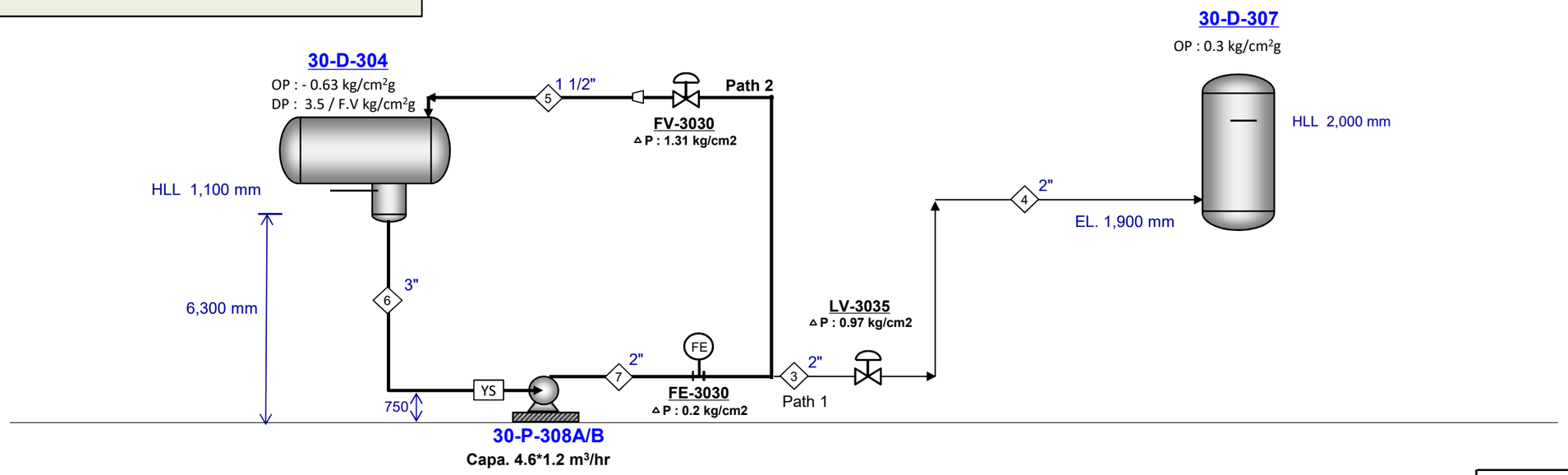

NOTE : 1. Assumed Data as below.
- Strainer △P = 0.07 kg/cm2
- Flowmeter △P = 0.2kg/cm2

CV Input Data		
Item No.		
Des. Cap.		
Density		
D.P		
Char.		

PUMP CALCULATION		
ITEM NUMBER	30-P-308A/B	
SUCTION	30-D-304	
Flow Rate	5.6	m3/hr
Operating Pres.	-0.63	kg/cm².G
Design Pres.	3.5	kg/cm².G
Min. Static Head	6.3	meter
Max. Static Head	7.4	meter
Pump Shaft Level	0.75	meter
Vapor Pres.	0.32	kg/cm².A
Allowance	0	meter
Pipe Friction Loss	0.001	kg/cm²
Strainer	0.07	kg/cm²
Others		kg/cm²
Net Suction Pres.	-0.15	kg/cm².G
Max. Suction Pres.	4.16	kg/cm².G
NPSH Available	5.67	meter
DISCHARGE	30-D-307	
Operating Pres.	-0.63	kg/cm².G
Max. Static Head	10.1	meter
Pipe friction Loss	0.047	kg/cm².G
Pipe Gravity Loss	0.921	kg/cm².G
Equip. Pres. Drop	0.2	kg/cm².G
Control Valves	1.3	kg/cm².G
Others		kg/cm².G
Disch. Press. Req'd	1.85	kg/cm².G
Diff. Pres.	2.00	kg/cm²
Diff. Head (Net)	20.2	meter
Hydr. Horsepower	0.1	KW
Est. Efficieny		%
Est. BHP		KW
Est. Shut-off Pres.	6.66	kg/cm².G
C.V dp / Friction	530.96	%

CONTROL VALVES			
ITEM NO.	CAL. CV	RTD CV	% OPEN

		SUCTION			DISCHARGE																	
STREAM ID	UNIT	6			7	FE-3030	FV-3030	5														
Design Case																						
Phase		LIQUID			LIQUID			LIQUID														
Vapor Fraction																						
Normal Flow Rate	kg/hr	1,980			1,980			1,980														
Over Design	%	0			0			0														
Rated Flow Rate	kg/hr	1,980			1,980			1,980														
Temperature	°C	40.0			40.0			40.0														
Pressure @Inlet	kg/cm²G	-0.63			1.85	1.85	1.65	0.34														
Pressure @Destination	kg/cm²G	-0.15			1.85	1.65	0.34	-0.63														
Line Size	inch	3			2			1.5														
Equivalent Length	M	48.2			13.5			52.8														
Elevation Change	M	-5.6			0.0			9.3														
Fluid, Density	kg/m³	990.0			990.0			990.0														
Fluid, Viscosity	cP	0.65			0.65			0.65														
Velocity	m/sec	0.12			0.26			0.49														
Pres. Drop by Friction	kg/cm²	0.001			0.002	0.000	0.000	0.044														
Pres. Drop by Gravity	kg/cm²	-0.549			0.000	0.000	0.000	0.921														
Pressure Drop / 100 M	kg/cm²	0.003			0.017			0.084														
Equipment Pres. Drop	kg/cm²	0.07				0.20																
CV PRESSURE DROP	kg/cm²						1.31															

LINE IDENTIFICATION		1	2	3	4	5	6	7	8	9	10	11	12	13	14	15	16	17
SIMU. STREAM ID																		
SERVICE						PUMP MIN. FLOW												
TYPE OF FLOW	(L/V/2PH)	LIQUID	LIQUID	LIQUID	LIQUID	LIQUID	LIQUID	LIQUID										
OPERATING CONDITION																		
Temperature	C	40	40	40	40	40	40	40										
Pressure @up	Kg/cm2.G																	
Pressure @down	Kg/cm2.G	0.54	-0.02	-0.01	-0.35	-0.97	0.55	0.00										
PIPING INFORMATION																		
Nominal Size	inch	3.0	2.0	2.0	2.0	1.5	3.0	2.0										
Schedule or Class	-	40	40	40	40	80	40	40										
Line length,straight	m	40.0	10.0	5.0	23.2	40.0	40.0	10.0										
Eqivalent Length Over Design Factor	-	0.25	0.50	0.50	0.50	0.50	0.25	0.50										
Net Elevation Change	m	(5.6)	0.0	0.0	3.15	9.3	(5.6)	0.0										
Equivalent Length	m	48.2	13.5	6.8	31.3	52.8	48.2	13.5										
Pipe inside Dia.	m	0.078	0.053	0.053	0.053	0.038	0.078	0.053										
Wall Roughness	mm	0.046	0.046	0.046	0.046	0.046	0.046	0.046										
LIQUID PHASE CALCULATION																		
Flow Rate	Kg/h	4,603	4,603	4,603	4,603	1,980	1,980	1,980										
Flow Rate Design Margin	%	20	20	20	20	0	0	0										
Density @PT	Kg/m3	990.0	990.0	990.0	990.0	990.0	990.0	990.0										
Viscosity @PT	cP	0.651	0.651	0.651	0.651	0.651	0.651	0.651										
Surface Tension	dyn/cm																	
Flow Rate, rated	kg/h	5,524	5,524	5,524	5,524	1,980	1,980	1,980										
Vol. Flow	m3/hr	5.6	5.6	5.6	5.6	2.0	2.0	2.0										
Velocity	m/s	0.32	0.72	0.72	0.72	0.49	0.12	0.26										
Reynolds No	-	3.85E+04	5.72E+04	5.72E+04	5.72E+04	2.82E+04	1.38E+04	2.05E+04										
Friction Factor	-	0.0239	0.0232	0.0232	0.0232	0.0267	0.0294	0.0276										
Press. @Out	Kg/cm2.G	0.542	-0.015	-0.008	-0.348	-0.965	0.548	-0.002										
Pressure Drop by Friction	Kg/cm2	0.0079	0.015	0.008	0.036	0.044	0.001	0.002										
Pressure Drop by Gravity	Kg/cm2	-0.549	0.000	0.000	0.312	0.921	-0.549	0.000										
Dp / 100 m (by friction)	Kg/cm2	0.0163	0.1145	0.1145	0.1145	0.0840	0.0026	0.0175										
VAPOR PHASE CALCULATION																		
Flow Rate,max op	Kg/h																	
Flow Rate Design Margin	%																	
Density @PT	Kg/m3																	
or MW	(-)																	
Compr. Z	(-)																	
Viscosity @PT	cP																	
Flow Rate,rated	Kg/h																	
Vol. Flow @in	m3/sec																	
Gas Density @in	Kg/m3																	
Velocity @in	m/s																	
Reynolds No	-																	
Friction Factor	-																	
Gas Dns @Out	Kg/m3																	
Velocity @Out	m/s																	
Mach no. @Out	-																	
Press. @Out	Kg/cm2.G																	
Pressure Drop by Friction	Kg/cm2																	
Pressure Drop by Gravity	Kg/cm2																	
Dp / 100 m (by friction)	Kg/cm2																	

30-P-309A/B

LOTTE E&C 롯데건설주식회사

JOB NO.		PREPD BY:	J.H.Kim	DATE:	Sep. 26 '22	PAGE:	1 / 3	0
SERVICE	SRC Bottoms Pump (Path 1)	CHKD BY:	J.H.Myung	APPD BY:	J.Y.Kim			

*** Result**

1) Diff. Pressure
Datasheet : 16.3 kg/cm2
PATH1 Calculation : 16.3 kg/cm2
-> No problem

2) Line Size
Referece
- Suc. : Velocity : 1.2 ~ 2.4 m/s, ΔP/100m : 0.23 kg/cm2
- Disch. : Velocity : 3.0 ~ 4.6 m/s, ΔP/100m : 0.46 kg/cm2

PATH1 Calculation :
-> No problem

PATH 1

GOVERNING

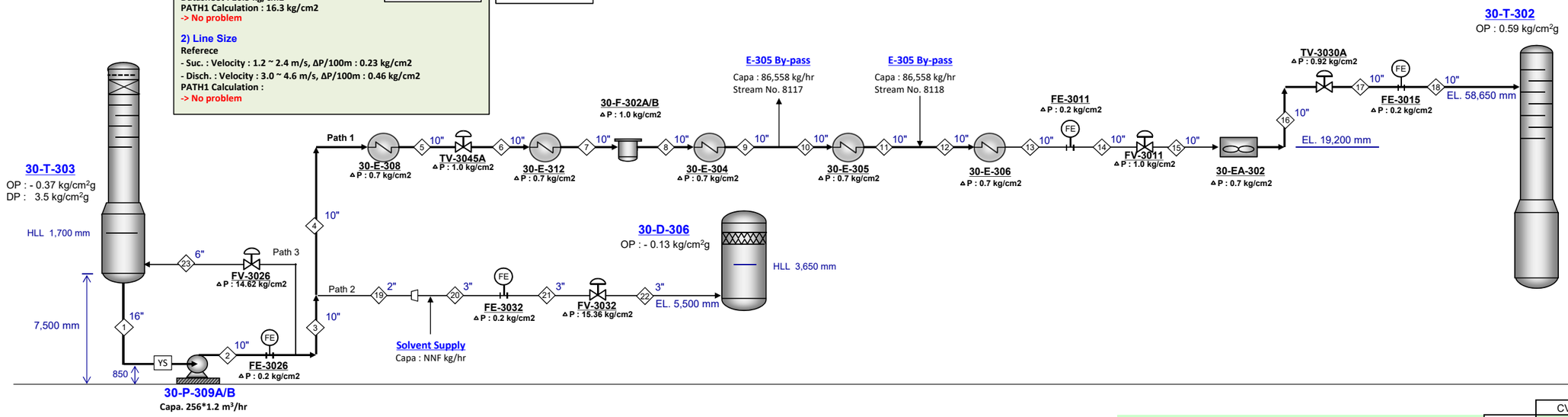

NOTE : 1. Assumed Data as below.
- Strainer ΔP = 0.07 kg/cm2
- Flowmeter △P = 0.2 kg/cm2

CV Input Data		
Item No.		
Des. Cap.		
Density		
D.P		
Char.		

PUMP CALCULATION

ITEM NUMBER	30-P-309A/B	
SUCTION		
Flow Rate	308.2	m3/hr
Operating Pres.	-0.37	kg/cm².G
Design Pres.	3.5	kg/cm².G
Min. Static Head	7.5	meter
Max. Static Head	9.2	meter
Pump Shaft Level	0.85	meter
Vapor Pres.	0.66	kg/cm².A
Allowance	0	meter
Pipe Friction Loss	0.004	kg/cm²
Strainer	0.07	kg/cm²
Others		kg/cm²
Net Suction Pres.	0.31	kg/cm².G
Max. Suction Pres.	4.45	kg/cm².G
NPSH Available	6.00	meter
DISCHARGE		
Operating Pres.	0.59	kg/cm².G
Max. Static Head	58.7	meter
Pipe friction Loss	0.428	kg/cm².G
Pipe Gravity Loss	6.868	kg/cm³.G
Equip. Pres. Drop	5.8	kg/cm².G
Control Valves	2.9	kg/cm².G
Others		kg/cm².G
Disch. Press. Req'd	16.61	kg/cm².G
Diff. Pres.	16.30	kg/cm²
Diff. Head (Net)	144	meter
Hydr. Horsepower	136.8	KW
Est. Efficieny		%
Est. BHP		KW
Est. Shut-off Pres.	24.82	kg/cm².G
C.V dp / Friction	46.88	%

CONTROL VALVES

ITEM NO.	CAL. CV	RTD CV	% OPEN

		SUCTION		DISCHARGE																													
STREAM ID	UNIT	1		2	FE-3026	3	4	30-E-308	5	TV-3045A	6	30-E-312	7	30-F-302A/B	8	30-E-304	9	10	30-E-305	11	12	30-E-306	13	FE-3011	14	FV-3011	15	30-EA-302	16	TV-3030A	17	FE-3015	18
Design Case																																	
Phase		LIQUID		LIQUID		LIQUID	LIQUID		LIQUID		LIQUID		LIQUID		LIQUID		LIQUID	LIQUID		LIQUID	LIQUID		LIQUID		LIQUID		LIQUID		LIQUID		LIQUID		LIQUID
Vapor Fraction																																	
Normal Flow Rate	kg/hr	290,900		290,900		289,956	288,526		288,526		288,526		288,526		288,526		288,526	201,968		201,968	288,526		288,526		288,526		288,526		288,526		288,526		288,526
Over Design	%	20		20		20	20		20		20		20		20		20	20		20	20		20		20		20		20		20		20
Rated Flow Rate	kg/hr	349,080		349,080		347,947	346,231		346,231		346,231		346,231		346,231		346,231	242,362		242,362	346,231		346,231		346,231		346,231		346,231		346,231		346,231
Temperature	°C	175.0		175.0		175.0	175.0		156.0		156.0		131.0		131.0		124.5	124.5		121.4	122.3		115.4		115.4		115.4		105.0		105.0		105.0
Pressure @Inlet	kg/cm²G	-0.37		16.61	16.59	16.39	16.37	16.29	15.59	15.58	14.58	14.53	13.83	13.82	12.82	12.81	12.11	12.10	12.10	11.40	11.39	11.39	10.69	10.67	10.47	10.47	9.47	7.21	6.51	6.50	5.58	5.57	5.37
Pressure @Destination	kg/cm²G	0.31		16.59	16.39	16.37	16.29	15.59	15.58	14.58	14.53	13.83	13.82	12.82	12.81	12.11	12.10	12.10	11.40	11.39	11.39	10.69	10.67	10.47	10.47	9.47	7.21	6.51	6.50	5.58	5.57	5.37	0.59
Line Size	inch	16		10		10	10		10		10		10		10		10	10		10	10		10		10		10		10		10		10
Equivalent Length	M	35.0		16.6		16.6	82.8		16.6		49.7		8.3		8.3		8.3	8.3		8.3	8.3		16.6		3.3		88.4		8.3		8.3		81.9
Elevation Change	M	-6.7		0.0		0.0	0.0		0.0		0.0		0.0		0.0		0.0	0.0		0.0	0.0		0.0		0.0		18.4		0.0		0.0		39.5
Fluid, Density	kg/m³	1,132.6		1,133.8		1,133.8	1,133.8		1,150.5		1,150.4		1,170.9		1,170.9		1,176.2	1,176.2		1,178.6	1,177.8		1,183.4		1,183.4		1,183.4		1,190.6		1,190.6		1,190.6
Fluid, Viscosity	cP	1.106		1.106		1.106	1.106		1.298		1.298		1.669		1.669		1.795	1.795		1.859	1.839		1.997		1.997		1.997		2.284		2.284		2.284
Velocity	m/sec	0.71		1.68		1.68	1.67		1.64		1.64		1.61		1.61		1.61	1.13		1.12	1.61		1.60		1.60		1.60		1.59		1.59		1.59
Pres. Drop by Friction	kg/cm²	0.004		0.016	0.000	0.016	0.081	0.000	0.016	0.000	0.049	0.000	0.008	0.000	0.008	0.000	0.008	0.004	0.000	0.004	0.008	0.000	0.017	0.000	0.003	0.000	0.088	0.000	0.008	0.000	0.008	0.000	0.083
Pres. Drop by Gravity	kg/cm²	-0.753		0.000	0.000	0.000	0.000	0.000	0.000	0.000	0.000	0.000	0.000	0.000	0.000	0.000	0.000	0.000	0.000	0.000	0.000	0.000	0.000	0.000	0.000	0.000	2.172	0.000	0.000	0.000	0.000	0.000	4.697
Pressure Drop / 100 M	kg/cm²	0.012		0.099		0.099	0.098		0.098		0.098		0.099		0.099		0.099	0.051		0.051	0.100		0.100		0.100		0.100		0.101		0.101		0.101
Equipment Pres. Drop	kg/cm²	0.07			0.20			0.70				0.70		1.00		0.70			0.70			0.70		0.20				0.70				0.20	
CV PRESSURE DROP	kg/cm²									1.00																1.00				0.92			

LOTTE E&C 롯데건설주식회사

JOB NO.		PREPD BY:	J.H.Kim	DATE:	Sep. 26 '22	PAGE:	2 / 3	0
SERVICE	SRC Bottoms Pump (Path 2)	CHKD BY:	J.H.Myung	APPD BY:	J.Y.Kim			

*** Result**

1) Diff. Pressure

Datasheet : 16.3 kg/cm2

PATH2 Calculation : 16.3 kg/cm2

-> No problem

2) Line Size

Referece

- Suc. : Velocity : 1.2 ~ 2.4 m/s, ΔP/100m : 0.23 kg/cm2

- Disch. : Velocity : 3.0 ~ 4.6 m/s, ΔP/100m : 0.46 kg/cm2

PATH2 Calculation :

-> No problem

PATH 2

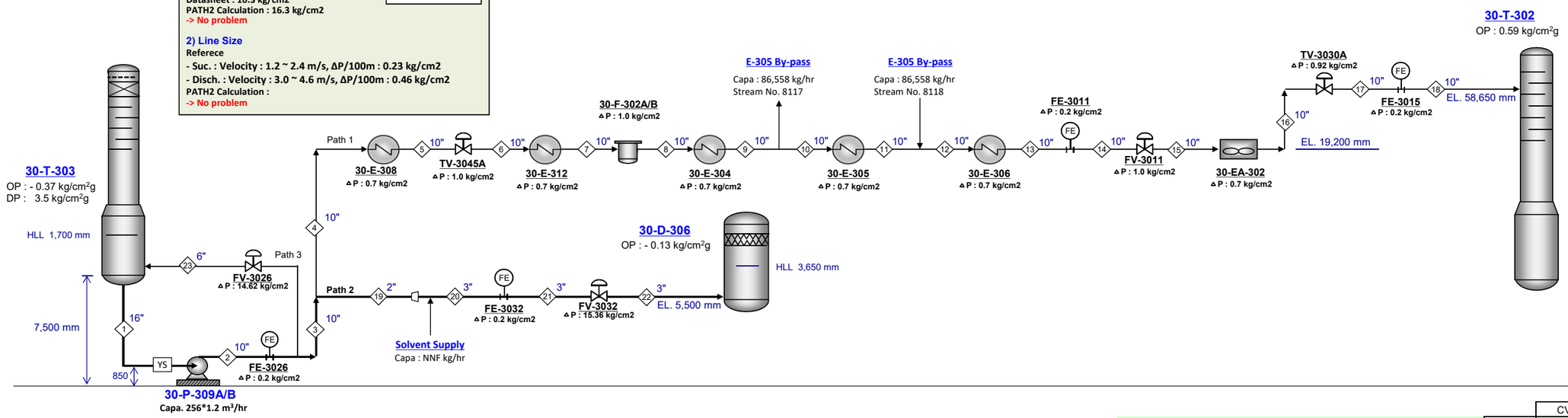

NOTE : 1. Assumed Data as below.
- Strainer ΔP = 0.07 kg/cm2
- Flowmeter △P = 0.2 kg/cm2

CV Input Data		
Item No.		
Des. Cap.		
Density		
D.P		
Char.		

PUMP CALCULATION		
ITEM NUMBER	30-P-309A/B	
SUCTION		
Flow Rate	308.2	m3/hr
Operating Pres.	-0.37	kg/cm².G
Design Pres.	3.5	kg/cm².G
Min. Static Head	7.5	meter
Max. Static Head	9.2	meter
Pump Shaft Level	0.85	meter
Vapor Pres.	0.66	kg/cm².A
Allowance	0	meter
Pipe Friction Loss	0.004	kg/cm²
Strainer	0.07	kg/cm²
Others		kg/cm²
Net Suction Pres.	0.31	kg/cm².G
Max. Suction Pres.	4.45	kg/cm².G
NPSH Available	6.00	meter
DISCHARGE		
Operating Pres.	-0.13	kg/cm².G
Max. Static Head	9.2	meter
Pipe friction Loss	0.034	kg/cm².G
Pipe Gravity Loss	0.940	kg/cm³.G
Equip. Pres. Drop	0.4	kg/cm².G
Control Valves	15.4	kg/cm².G
Others		kg/cm².G
Disch. Press. Req'd	16.60	kg/cm².G
Diff. Pres.	16.30	kg/cm²
Diff. Head (Net)	144	meter
Hydr. Horsepower	136.8	KW
Est. Efficieny		%
Est. BHP		KW
Est. Shut-off Pres.	24.82	kg/cm².G
C.V dp / Friction	3536.65	%

CONTROL VALVES			
ITEM NO.	CAL. CV	RTD CV	% OPEN

		SUCTION		DISCHARGE								
STREAM ID	UNIT	1		2	FE-3026	3	19	20	FE-3032	21	FV-3032	22
Design Case												
Phase		LIQUID		LIQUID		LIQUID	LIQUID	LIQUID		LIQUID		LIQUID
Vapor Fraction												
Normal Flow Rate	kg/hr	290,900		290,900		289,956	1,430	1,430		1,430		1,430
Over Design	%	20		20		20	20	20		20		20
Rated Flow Rate	kg/hr	349,080		349,080		347,947	1,716	1,716		1,716		1,716
Temperature	°C	175.0		175.0		175.0	175.0	175.0		175.0		175.0
Pressure @Inlet	kg/cm²G	-0.37		16.60	16.59	16.39	16.37	16.37	16.37	16.17	16.17	0.81
Pressure @Destination	kg/cm²G	0.31		16.59	16.39	16.37	16.37	16.37	16.17	16.17	0.81	-0.13
Line Size	inch	16		10		10	2	3		3		3
Equivalent Length	M	35.0		16.6		16.6	6.8	7.0		7.0		18.7
Elevation Change	M	-6.7		0.0		0.0	0.0	0.0		0.0		8.3
Fluid, Density	kg/m³	1,132.6		1,133.8		1,133.8	1,133.0	1,133.0		1,133.0		1,133.0
Fluid, Viscosity	cP	1.106		1.106		1.106	1.106	1.106		1.106		1.106
Velocity	m/sec	0.71		1.68		1.68	0.19	0.09		0.09		0.09
Pres. Drop by Friction	kg/cm²	0.004		0.016	0.000	0.016	0.001	0.000	0.000	0.000	0.000	0.000
Pres. Drop by Gravity	kg/cm²	-0.753		0.000	0.000	0.000	0.000	0.000	0.000	0.000	0.000	0.940
Pressure Drop / 100 M	kg/cm²	0.012		0.099		0.099	0.013	0.002		0.002		0.002
Equipment Pres. Drop	kg/cm²	0.07			0.20				0.20			
CV PRESSURE DROP	kg/cm²										15.36	

LOTTE E&C 롯데건설주식회사	JOB NO.		PREPD BY: J.H.Kim	DATE: Sep. 26 '22	PAGE: 3 / 3
	SERVICE	SRC Bottoms Pump (Path 3)	CHKD BY: J.H.Myung	APPD BY: J.Y.Kim	0

*** Result**

1) Diff. Pressure

Datasheet : 16.3 kg/cm2

PATH1 Calculation : 16.3 kg/cm2

-> No problem

2) Line Size

Referece

- Suc. : Velocity : 1.2 ~ 2.4 m/s, ΔP/100m : 0.23 kg/cm2
- Disch. : Velocity : 3.0 ~ 4.6 m/s, ΔP/100m : 0.46 kg/cm2

PATH1 Calculation :

-> No problem

PATH 3

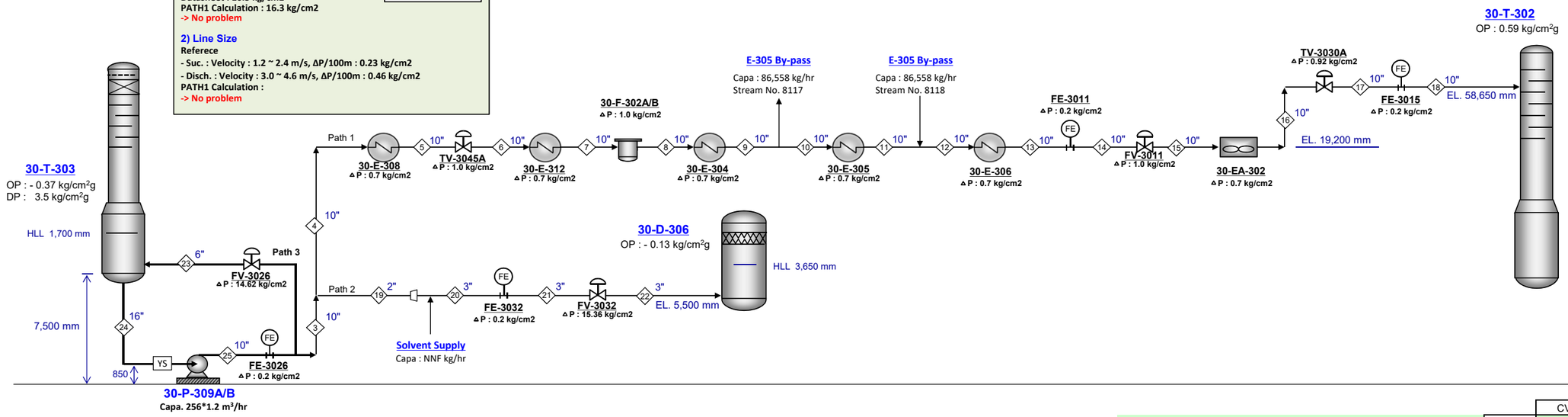

NOTE : 1. Assumed Data as below.
- Strainer ΔP = 0.07 kg/cm2
- Flowmeter △P = 0.2 kg/cm2

	CV Input Data	
Item No.		
Des. Cap.		
Density		
D.P		
Char.		

STREAM ID	UNIT	SUCTION 24		DISCHARGE 25	FE-3026	FV-3026	23
Design Case							
Phase		LIQUID		LIQUID			LIQUID
Vapor Fraction							
Normal Flow Rate	kg/hr	147,290		147,290			147,290
Over Design	%	0		0			0
Rated Flow Rate	kg/hr	147,290		147,290			147,290
Temperature	°C	175.0		175.0			175.0
Pressure @Inlet	kg/cm²G	-0.37		16.61	16.61	16.41	1.79
Pressure @Destination	kg/cm²G	0.31		16.61	16.41	1.79	0.75
Line Size	inch	16		10			6
Equivalent Length	M	35.0		16.6			38.3
Elevation Change	M	-6.7		0.0			8.4
Fluid, Density	kg/m³	1,133.0		1,133.0			1,133.0
Fluid, Viscosity	cP	1.106		1.106			1.106
Velocity	m/sec	0.30		0.71			1.94
Pres. Drop by Friction	kg/cm²	0.001		0.003	0.000	0.000	0.091
Pres. Drop by Gravity	kg/cm²	-0.753		0.000	0.000	0.000	0.946
Pressure Drop / 100 M	kg/cm²	0.002		0.020			0.238
Equipment Pres. Drop	kg/cm²	0.07			0.20		
CV PRESSURE DROP	kg/cm²					14.62	

PUMP CALCULATION

ITEM NUMBER	30-P-309A/B	
SUCTION		
Flow Rate	308.2	m3/hr
Operating Pres.	-0.37	kg/cm².G
Design Pres.	3.5	kg/cm².G
Min. Static Head	7.5	meter
Max. Static Head	9.2	meter
Pump Shaft Level	0.85	meter
Vapor Pres.	0.66	kg/cm².A
Allowance	0	meter
Pipe Friction Loss	0.001	kg/cm²
Strainer	0.07	kg/cm²
Others		kg/cm²
Net Suction Pres.	0.31	kg/cm².G
Max. Suction Pres.	4.45	kg/cm².G
NPSH Available	6.02	meter
DISCHARGE		
Operating Pres.	-0.37	kg/cm².G
Max. Static Head	9.2	meter
Pipe friction Loss	0.095	kg/cm².G
Pipe Gravity Loss	0.946	kg/cm³.G
Equip. Pres. Drop	0.2	kg/cm².G
Control Valves	14.6	kg/cm².G
Others	1.12	kg/cm².G
Disch. Press. Req'd	16.61	kg/cm².G
Diff. Pres.	16.30	kg/cm²
Diff. Head (Net)	144	meter
Hydr. Horsepower	57.7	KW
Est. Efficieny		%
Est. BHP		KW
Est. Shut-off Pres.	24.82	kg/cm².G
C.V dp / Friction	1033.50	%

CONTROL VALVES

ITEM NO.	CAL. CV	RTD CV	% OPEN

LINE IDENTIFICATION		1	2	3	4	5	6	7	8	9	10	11	12	13	14	15	16	17
SIMU. STREAM ID					Path 1													
SERVICE					Pump Capa. * 99.5%	E-308 T out		E-312 T out		E-304 T out	유량변경	E-305 T out	E-306 T in	E-306 T out			EA-302 out	
TYPE OF FLOW	(L/V/2PH)	LIQUID	LIQUID	LIQUID	LIQUID	LIQUID	LIQUID	LIQUID	LIQUID	LIQUID	LIQUID	LIQUID	LIQUID	LIQUID	LIQUID	LIQUID	LIQUID	LIQUID
OPERATING CONDITION																		
Temperature	C	175	175	175	175	156	156	131	131	125	125	121	122	115	115	115	105	105
Pressure @up	Kg/cm2.G																	
Pressure @down	Kg/cm2.G	0.75	-0.02	-0.02	-0.08	-0.02	-0.05	-0.01	-0.01	-0.01	0.00	0.00	-0.01	-0.02	0.00	-2.26	-0.01	-0.01
PIPING INFORMATION																		
Nominal Size	inch	16.0	10.0	10.0	10.0	10.0	10.0	10.0	10.0	10.0	10.0	10.0	10.0	10.0	10.0	10.0	10.0	10.0
Schedule or Class	-	20	40	40	40	40	40	40	40	40	40	40	40	40	40	40	40	40
Line length,straight	m	25.0	10.0	10.0	50.0	10.0	30.0	5.0	5.0	5.0	5.0	5.0	5.0	10.0	2	53	5	5
Eqivalent Length Over Design Factor	-	0.25	0.50	0.50	0.50	0.50	0.50	0.5	0.50	0.50	0.50	0.50	0.5	0.50	0.5	0.5	0.5	0.5
Net Elevation Change	m	(6.7)	0.0	0.0	0.0	0.0	0.0	0.0	0.0	0.0	0.0	0.0	0.0	0.0	0.0	18.4	0.0	0.0
Equivalent Length	m	35.0	16.6	16.6	82.8	16.6	49.7	8.3	8.3	8.3	8.3	8.3	8.3	16.6	3.3	88.4	8.3	8.3
Pipe inside Dia.	m	0.391	0.255	0.255	0.255	0.255	0.255	0.255	0.255	0.255	0.255	0.255	0.255	0.255	0.255	0.255	0.255	0.255
Wall Roughness	mm	0.046	0.046	0.046	0.046	0.046	0.046	0.046	0.046	0.046	0.046	0.046	0.046	0.046	0.046	0.046	0.046	0.046
LIQUID PHASE CALCULATION																		
Flow Rate	Kg/h	290,900	290,900	289,956	288,526	288,526	288,526	288,526	288,526	288,526	201,968	201,968	288,526	288,526	288,526	288,526	288,526	288,526
Flow Rate Design Margin	%	20	20	20	20	20	20	20	20	20	20	20	20	20	20	20	20	20
Density @PT	Kg/m3	1132.6	1133.8	1133.8	1133.8	1150.5	1150.4	1170.9	1170.9	1176.2	1176.2	1178.6	1177.8	1183.4	1183.4	1183.4	1190.6	1190.6
Viscosity @PT	cP	1.106	1.106	1.106	1.106	1.298	1.298	1.669	1.669	1.795	1.795	1.859	1.839	1.997	1.997	1.997	2.284	2.284
Surface Tension	dyn/cm																	
Flow Rate, rated	kg/h	349,080	349,080	347,947	346,231	346,231	346,231	346,231	346,231	346,231	242,362	242,362	346,231	346,231	346,231	346,231	346,231	346,231
Vol. Flow	m3/hr	308.2	307.9	306.9	305.4	300.9	301.0	295.7	295.7	294.4	206.1	205.6	294.0	292.6	292.6	292.6	290.8	290.8
Velocity	m/s	0.71	1.68	1.68	1.67	1.64	1.64	1.61	1.61	1.61	1.13	1.12	1.61	1.60	1.60	1.60	1.59	1.59
Reynolds No	-	2.86E+05	4.39E+05	4.37E+05	4.35E+05	3.71E+05	3.71E+05	2.88E+05	2.88E+05	2.68E+05	1.88E+05	1.81E+05	2.62E+05	2.41E+05	2.41E+05	2.41E+05	2.11E+05	2.11E+05
Friction Factor	-	0.0157	0.0154	0.0155	0.0155	0.0157	0.0157	0.0162	0.0162	0.0163	0.0171	0.0172	0.0164	0.0165	0.0165	0.0165	0.0168	0.0168
Press. @Out	Kg/cm2.G	0.749	-0.016	-0.016	-0.081	-0.016	-0.049	-0.008	-0.008	-0.008	-0.004	-0.004	-0.008	-0.017	-0.003	-2.260	-0.008	-0.008
Pressure Drop by Friction	Kg/cm2	0.0041	0.016	0.016	0.081	0.016	0.049	0.008	0.008	0.008	0.004	0.004	0.008	0.017	0.003	0.088	0.008	0.008
Pressure Drop by Gravity	Kg/cm2	-0.753	0.000	0.000	0.000	0.000	0.000	0.000	0.000	0.000	0.000	0.000	0.000	0.000	0.000	2.172	0.000	0.000
Dp / 100 m (by friction)	Kg/cm2	0.0118	0.0992	0.0986	0.0976	0.0978	0.0978	0.0989	0.0989	0.0994	0.0511	0.0512	0.0995	0.1001	0.1001	0.1001	0.1013	0.1013
VAPOR PHASE CALCULATION																		
Flow Rate,max op	Kg/h																	
Flow Rate Design Margin	%																	
Density @PT	Kg/m3																	
or MW	(-)																	
Compr. Z	(-)																	
Viscosity @PT	cP																	
Flow Rate,rated	Kg/h																	
Vol. Flow @in	m3/sec																	
Gas Density @in	Kg/m3																	
Velocity @in	m/s																	
Reynolds No	-																	
Friction Factor	-																	
Gas Dns @Out	Kg/m3																	
Velocity @Out	m/s																	
Mach no. @Out	-																	
Press. @Out	Kg/cm2.G																	
Pressure Drop by Friction	Kg/cm2																	
Pressure Drop by Gravity	Kg/cm2																	
Dp / 100 m (by friction)	Kg/cm2																	

LINE IDENTIFICATION		18	19	20	21	22	23	24	25
SIMU. STREAM ID			Path 2						
SERVICE			Pump Capa. * 0.5%				PUMP MIN. FLOW		
TYPE OF FLOW	(L/V/2PH)	LIQUID	LIQUID	LIQUID	LIQUID	LIQUID	LIQUID	LIQUID	LIQUID
OPERATING CONDITION									
Temperature	C	105	175	175	175	175	175	175	175
Pressure @up	Kg/cm2.G								
Pressure @down	Kg/cm2.G	-4.78	0.00	0.00	0.00	-0.94	-1.04	0.75	0.00
PIPING INFORMATION									
Nominal Size	inch	10.0	2.0	3.0	3.0	3.0	6.0	16.0	10.0
Schedule or Class	-	40	40	40	40	40	40	20	40
Line length,straight	m	49	5	5	5	13	25	25.0	10.0
Eqivalent Length Over Design Factor	-	0.5	0.5	0.5	0.5	0.5	0.5	0.25	0.50
Net Elevation Change	m	39.5	0.0	0.0	0.0	8.3	8.4	(6.7)	0.0
Equivalent Length	m	81.9	6.8	7.0	7.0	18.7	38.3	35.0	16.6
Pipe inside Dia.	m	0.255	0.053	0.078	0.078	0.078	0.154	0.391	0.255
Wall Roughness	mm	0.046	0.046	0.046	0.046	0.046	0.046	0.046	0.046
LIQUID PHASE CALCULATION									
Flow Rate	Kg/h	288,526	1,430	1,430	1,430	1,430	147,290	147,290	147,290
Flow Rate Design Margin	%	20	20	20	20	20	0	0	0
Density @PT	Kg/m3	1190.6	1133.0	1133.0	1133.0	1133.0	1133.0	1133.0	1133.0
Viscosity @PT	cP	2.284	1.106	1.106	1.106	1.106	1.106	1.106	1.106
Surface Tension	dyn/cm								
Flow Rate, rated	kg/h	346,231	1,716	1,716	1,716	1,716	147,290	147,290	147,290
Vol. Flow	m3/hr	290.8	1.5	1.5	1.5	1.5	130.0	130.0	130.0
Velocity	m/s	1.59	0.19	0.09	0.09	0.09	1.94	0.30	0.71
Reynolds No	-	2.11E+05	1.05E+04	7.04E+03	7.04E+03	7.04E+03	3.06E+05	1.21E+05	1.85E+05
Friction Factor	-	0.0168	0.0319	0.0347	0.0347	0.0347	0.0169	0.0180	0.0172
Press. @Out	Kg/cm2.G	-4.780	-0.001	0.000	0.000	-0.941	-1.037	0.753	-0.003
Pressure Drop by Friction	Kg/cm2	0.083	0.001	0.000	0.000	0.000	0.091	0.001	0.003
Pressure Drop by Gravity	Kg/cm2	4.697	0.000	0.000	0.000	0.940	0.946	-0.753	0.000
Dp / 100 m (by friction)	Kg/cm2	0.1013	0.0132	0.0020	0.0020	0.0020	0.2384	0.0024	0.0196
VAPOR PHASE CALCULATION									
Flow Rate,max op	Kg/h								
Flow Rate Design Margin	%								
Density @PT	Kg/m3								
or MW	(-)								
Compr. Z	(-)								
Viscosity @PT	cP								
Flow Rate,rated	Kg/h								
Vol. Flow @in	m3/sec								
Gas Density @in	Kg/m3								
Velocity @in	m/s								
Reynolds No	-								
Friction Factor	-								
Gas Dns @Out	Kg/m3								
Velocity @Out	m/s								
Mach no. @Out	-								
Press. @Out	Kg/cm2.G								
Pressure Drop by Friction	Kg/cm2								
Pressure Drop by Gravity	Kg/cm2								
Dp / 100 m (by friction)	Kg/cm2								

30-P-310A/B

LOTTE E&C 롯데건설주식회사	JOB NO.		PREPD BY: J.H.Kim	DATE: Sep. 26 '22	PAGE: 1 / 2	0
	SERVICE	Water Surge Pump (PATH1)	CHKD BY: J.H.Myung	APPD BY: J.Y.Kim		

*** Result**

1) Diff. Pressure

Datasheet : 3.17 kg/cm2
Calculation : 3.17 kg/cm2
-> No problem

2) Line Size

Reference
- Suc. : Velocity : 1.2 ~ 2.4 m/s, ΔP/100m : 0.23 kg/cm2
- Disch. : Velocity : 1.8 ~ 2.4 m/s, ΔP/100m : 0.92 kg/cm2

Calculation :
-> No problem

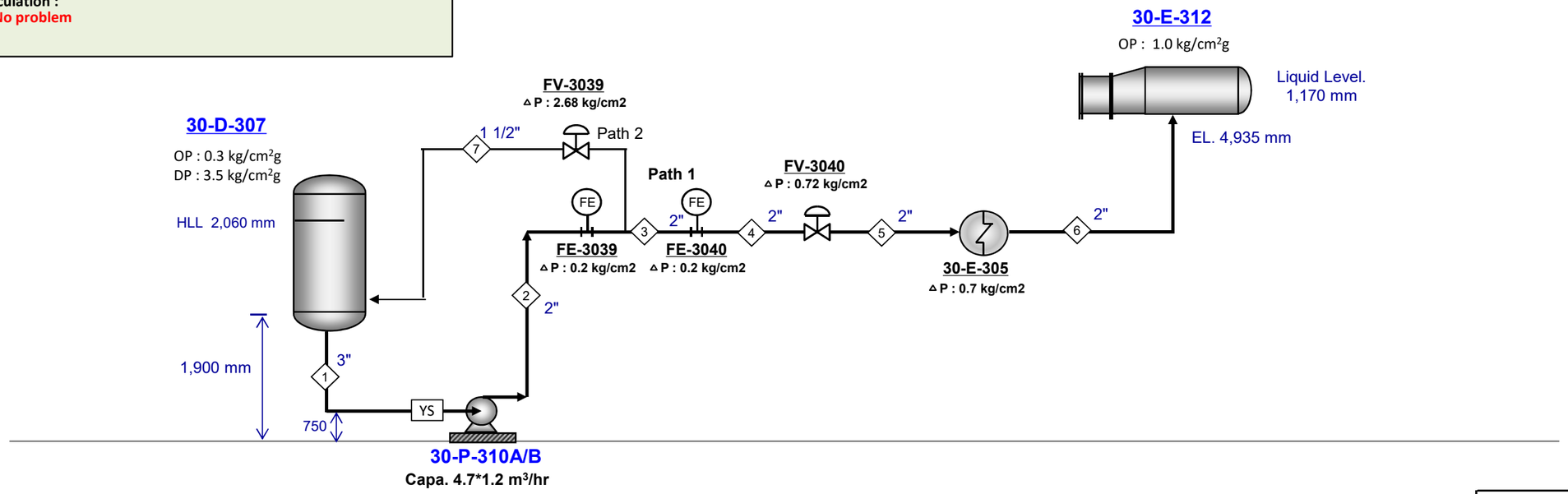

NOTE : 1. Assumed Data as below.
- Strainer △P = 0.07 kg/cm2
- Flowmeter △P = 0.2 kg/cm2

CV Input Data		
Item No.		
Des. Cap.		
Density		
D.P		
Char.		

PUMP CALCULATION

ITEM NUMBER	30-P-310A/B	
SUCTION		
Flow Rate	5.6	m3/hr
Operating Pres.	0.3	kg/cm².G
Design Pres.	3.5	kg/cm².G
Min. Static Head	1.9	meter
Max. Static Head	3.96	meter
Pump Shaft Level	0.75	meter
Vapor Pres.	0.317	kg/cm².A
Allowance	0	meter
Pipe Friction Loss	0.004	kg/cm²
Strainer	0.07	kg/cm²
Others		kg/cm²
Net Suction Pres.	0.34	kg/cm².G
Max. Suction Pres.	3.82	kg/cm².G
NPSH Available	10.67	meter
DISCHARGE		
Operating Pres.	1.0	kg/cm².G
Max. Static Head	6.1	meter
Pipe friction Loss	0.181	kg/cm².G
Pipe Gravity Loss	0.513	kg/cm³.G
Equip. Pres. Drop	1.1	kg/cm².G
Control Valves	0.7	kg/cm².G
Others		kg/cm².G
Disch. Press. Req'd	3.51	kg/cm².G
Diff. Pres.	3.17	kg/cm²
Diff. Head (Net)	32	meter
Hydr. Horsepower	0.5	KW
Est. Efficieny		%
Est. BHP		KW
Est. Shut-off Pres.	7.78	kg/cm².G
C.V dp / Friction	56.23	%

CONTROL VALVES

ITEM NO.	CAL. CV	RTD CV	% OPEN

STREAM ID	UNIT	1			2	FE-3039	3	FE-3040	4	FV-3040	5	30-E-305	6
Design Case													
Phase		LIQUID			LIQUID		LIQUID		LIQUID		LIQUID		LIQUID
Vapor Fraction													
Normal Flow Rate	kg/hr	4,653			4,653		4,653		4,653		4,653		4,653
Over Design	%	20			20		20		20		20		20
Rated Flow Rate	kg/hr	5,584			5,584		5,584		5,584		5,584		5,584
Temperature	°C	40.0			40.0		40.0		40.0		40.0		100.0
Pressure @Inlet	kg/cm²G	0.30			3.51	3.50	3.30	3.28	3.08	3.07	2.35	2.26	1.56
Pressure @Destination	kg/cm²G	0.34			3.50	3.30	3.28	3.08	3.07	2.35	2.26	1.56	1.00
Line Size	inch	3			2		2		2		2		2
Equivalent Length	M	24.1			13.5		13.5		6.8		79.8		43.3
Elevation Change	M	-1.2			0.0		0.0		0.0		0.0		5.4
Fluid, Density	kg/m³	990.0			990.0		990.0		990.0		990.0		957.9
Fluid, Viscosity	cP	0.651			0.651		0.651		0.651		0.651		0.279
Velocity	m/sec	0.33			0.72		0.72		0.72		0.72		0.75
Pres. Drop by Friction	kg/cm²	0.004			0.016	0.000	0.016	0.000	0.008	0.000	0.093	0.000	0.048
Pres. Drop by Gravity	kg/cm²	-0.114			0.000	0.000	0.000	0.000	0.000	0.000	0.000	0.000	0.513
Pressure Drop / 100 M	kg/cm²	0.017			0.117		0.117		0.117		0.117		0.110
Equipment Pres. Drop	kg/cm²	0.07				0.20		0.20				0.70	
CV PRESSURE DROP	kg/cm²									0.72			

LOTTE E&C 롯데건설주식회사	JOB NO.		PREPD BY:	J.H.Kim	DATE:	Sep. 26 '22	PAGE:	2 / 2	0
	SERVICE	Water Surge Pump (PATH2)	CHKD BY:	J.H.Myung	APPD BY:	J.Y.Kim			

*** Result**

1) Diff. Pressure

Datasheet : 3.17 kg/cm2
Calculation : 3.17 kg/cm2
-> No problem

2) Line Size

Reference
- Suc. : Velocity : 1.2 ~ 2.4 m/s, ΔP/100m : 0.23 kg/cm2
- Disch. : Velocity : 1.8 ~ 2.4 m/s, ΔP/100m : 0.92 kg/cm2

Calculation :
-> No problem

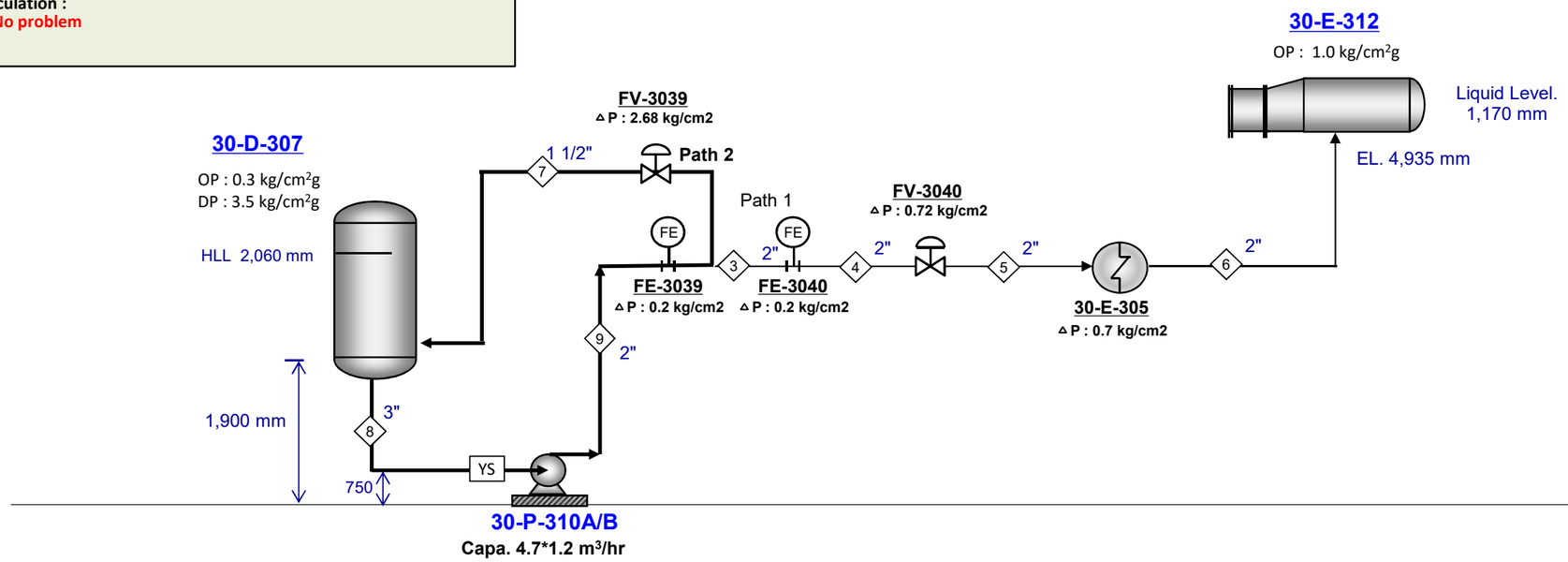

NOTE : 1. Assumed Data as below.
- Strainer △P = 0.07 kg/cm2
- Flowmeter △P = 0.2 kg/cm2

CV Input Data		
Item No.		
Des. Cap.		
Density		
D.P		
Char.		

PUMP CALCULATION

ITEM NUMBER	30-P-310A/B	
SUCTION		
Flow Rate	5.6	m3/hr
Operating Pres.	0.3	kg/cm².G
Design Pres.	3.5	kg/cm².G
Min. Static Head	1.9	meter
Max. Static Head	3.96	meter
Pump Shaft Level	0.75	meter
Vapor Pres.	0.317	kg/cm².A
Allowance	0	meter
Pipe Friction Loss	0.001	kg/cm²
Strainer	0.07	kg/cm²
Others		kg/cm²
Net Suction Pres.	0.34	kg/cm².G
Max. Suction Pres.	3.82	kg/cm².G
NPSH Available	10.70	meter
DISCHARGE		
Operating Pres.	0.3	kg/cm².G
Max. Static Head	3.9	meter
Pipe friction Loss	0.025	kg/cm².G
Pipe Gravity Loss	0.312	kg/cm³.G
Equip. Pres. Drop	0.2	kg/cm².G
Control Valves	2.7	kg/cm².G
Others		kg/cm².G
Disch. Press. Req'd	3.52	kg/cm².G
Diff. Pres.	3.17	kg/cm²
Diff. Head (Net)	32	meter
Hydr. Horsepower	0.2	KW
Est. Efficieny		%
Est. BHP		KW
Est. Shut-off Pres.	7.78	kg/cm².G
C.V dp / Friction	1193.54	%

CONTROL VALVES

ITEM NO.	CAL. CV	RTD CV	% OPEN

		SUCTION			DISCHARGE																	
STREAM ID	UNIT	8			9	FE-3039	FV-3039	7														
Design Case																						
Phase		LIQUID			LIQUID			LIQUID														
Vapor Fraction																						
Normal Flow Rate	kg/hr	1,980			1,980			1,980														
Over Design	%	0			0			0														
Rated Flow Rate	kg/hr	1,980			1,980			1,980														
Temperature	°C	40.0			40.0			40.0														
Pressure @Inlet	kg/cm²G	0.30			3.52	3.51	3.31	0.63														
Pressure @Destination	kg/cm²G	0.34			3.51	3.31	0.63	0.30														
Line Size	inch	3			2			1.5														
Equivalent Length	M	24.1			13.5			26.4														
Elevation Change	M	-1.2			0.0			3.2														
Fluid, Density	kg/m³	990.0			990.0			990.0														
Fluid, Viscosity	cP	0.651			0.651			0.651														
Velocity	m/sec	0.12			0.26			0.49														
Pres. Drop by Friction	kg/cm²	0.001			0.002	0.000	0.000	0.022														
Pres. Drop by Gravity	kg/cm²	-0.114			0.000	0.000	0.000	0.312														
Pressure Drop / 100 M	kg/cm²	0.003			0.017			0.084														
Equipment Pres. Drop	kg/cm²	0.07				0.20																
CV PRESSURE DROP	kg/cm²						2.68															

LINE IDENTIFICATION		1	2	3	4	5	6	7	8	9	10	11	12	13	14	15	16	17
SIMU. STREAM ID																		
SERVICE								PUMP MIN. FLOW										
TYPE OF FLOW	(L/V/2PH)	LIQUID	LIQUID	LIQUID	LIQUID	LIQUID	LIQUID	LIQUID	LIQUID	LIQUID								
OPERATING CONDITION																		
Temperature	C	40	40	40	40	40	100	40	40	40								
Pressure @up	Kg/cm2.G																	
Pressure @down	Kg/cm2.G	0.11	-0.02	-0.02	-0.01	-0.09	-0.56	-0.33	0.11	0.00								
PIPING INFORMATION																		
Nominal Size	inch	3.0	2.0	2.0	2.0	2.0	2.0	1.5	3.0	2.0								
Schedule or Class	-	40	40	40	40	40	40	80	40	40								
Line length,straight	m	20.0	10.0	10.0	5.0	59.0	32.0	20.0	20.0	10.0								
Eqivalent Length Over Design Factor	-	0.25	0.50	0.50	0.50	0.50	0.50	0.50	0.25	0.50								
Net Elevation Change	m	(1.2)	0.0	0.0	0.0	0.0	5.4	3.2	(1.2)	0.0								
Equivalent Length	m	24.1	13.5	13.5	6.8	79.8	43.3	26.4	24.1	13.5								
Pipe inside Dia.	m	0.078	0.053	0.053	0.053	0.053	0.053	0.038	0.078	0.053								
Wall Roughness	mm	0.046	0.046	0.046	0.046	0.046	0.046	0.046	0.046	0.046								
LIQUID PHASE CALCULATION																		
Flow Rate	Kg/h	4,653	4,653	4,653	4,653	4,653	4,653	1,980	1,980	1,980								
Flow Rate Design Margin	%	20	20	20	20	20	20	0	0	0								
Density @PT	Kg/m3	990.0	990.0	990.0	990.0	990.0	957.9	990.0	990.0	990.0								
Viscosity @PT	cP	0.651	0.651	0.651	0.651	0.651	0.279	0.651	0.651	0.651								
Surface Tension	dyn/cm																	
Flow Rate, rated	kg/h	5,584	5,584	5,584	5,584	5,584	5,584	1,980	1,980	1,980								
Vol. Flow	m3/hr	5.6	5.6	5.6	5.6	5.6	5.8	2.0	2.0	2.0								
Velocity	m/s	0.33	0.72	0.72	0.72	0.72	0.75	0.49	0.12	0.26								
Reynolds No	-	3.89E+04	5.78E+04	5.78E+04	5.78E+04	5.78E+04	1.35E+05	2.82E+04	1.38E+04	2.05E+04								
Friction Factor	-	0.0238	0.0232	0.0232	0.0232	0.0232	0.0212	0.0267	0.0294	0.0276								
Press. @Out	Kg/cm2.G	0.110	-0.016	-0.016	-0.008	-0.093	-0.561	-0.334	0.113	-0.002								
Pressure Drop by Friction	Kg/cm2	0.0040	0.016	0.016	0.008	0.093	0.048	0.022	0.001	0.002								
Pressure Drop by Gravity	Kg/cm2	-0.114	0.000	0.000	0.000	0.000	0.513	0.312	-0.114	0.000								
Dp / 100 m (by friction)	Kg/cm2	0.0166	0.1169	0.1169	0.1169	0.1169	0.1101	0.0840	0.0026	0.0175								
VAPOR PHASE CALCULATION																		
Flow Rate,max op	Kg/h																	
Flow Rate Design Margin	%																	
Density @PT	Kg/m3																	
or MW	(-)																	
Compr. Z	(-)																	
Viscosity @PT	cP																	
Flow Rate,rated	Kg/h																	
Vol. Flow @in	m3/sec																	
Gas Density @in	Kg/m3																	
Velocity @in	m/s																	
Reynolds No	-																	
Friction Factor	-																	
Gas Dns @Out	Kg/m3																	
Velocity @Out	m/s																	
Mach no. @Out	-																	
Press. @Out	Kg/cm2.G																	
Pressure Drop by Friction	Kg/cm2																	
Pressure Drop by Gravity	Kg/cm2																	
Dp / 100 m (by friction)	Kg/cm2																	

30-P-311

LOTTE E&C 롯데건설주식회사	JOB NO.		PREPD BY:	J.H.Kim	DATE:	Sep. 26 '22	PAGE:	1 / 2	0
	SERVICE	Fresh/Wet Solvent Pump (PATH1)	CHKD BY:	J.H.Myung	APPD BY:	J.Y.Kim			

*** Result**

1) Diff. Pressure

Datasheet : 13.84 kg/cm2
Calculation : 13.82 kg/cm2
-> No problem

2) Line Size

Referece
- Suc. : Velocity : 1.2 ~ 2.4 m/s, ΔP/100m : 0.23 kg/cm2
- Disch. : Velocity : 1.8 ~ 2.4 m/s, ΔP/100m : 0.92 kg/cm2

Calculation :
-> No problem

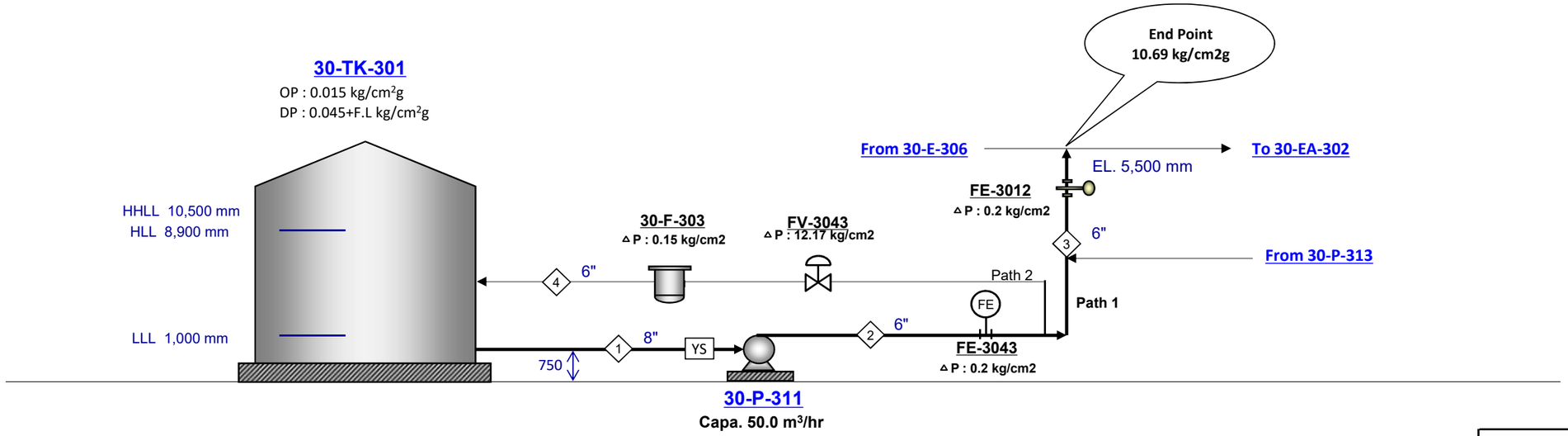

NOTE : 1. Assumed Data as below.
- Strainer △P = 0.07 kg/cm2
- Flowmeter △P = 0.2 kg/cm2
- Tank Foundation = 700 mm

PUMP CALCULATION		
ITEM NUMBER	30-P-311	
SUCTION	30-TK-301	
Flow Rate	50.0	m3/hr
Operating Pres.	0.015	kg/cm².G
Design Pres.	0.045	kg/cm².G
Min. Static Head	1.7	meter
Max. Static Head	9.4	meter
Pump Shaft Level	0.75	meter
Vapor Pres.	0.014	kg/cm².A
Allowance	0	meter
Pipe Friction Loss	0.006	kg/cm²
Strainer	0.07	kg/cm²
Others		kg/cm²
Net Suction Pres.	0.06	kg/cm².G
Max. Suction Pres.	1.12	kg/cm².G
NPSH Available	8.65	meter
DISCHARGE		
Operating Pres.	10.69	kg/cm².G
Max. Static Head	5.5	meter
Pipe friction Loss	0.193	kg/cm².G
Pipe Gravity Loss	0.591	kg/cm³.G
Equip. Pres. Drop	0.4	kg/cm².G
Control Valves	0.0	kg/cm².G
Others	2	kg/cm².G
Disch. Press. Req'd	13.87	kg/cm².G
Diff. Pres.	13.82	kg/cm²
Diff. Head (Net)	111	meter
Hydr. Horsepower	18.8	KW
Est. Efficieny		%
Est. BHP		KW
Est. Shut-off Pres.	18.39	kg/cm².G
C.V dp / Friction	0.00	%

CV Input Data		
Item No.		
Des. Cap.		
Density		
D.P		
Char.		

CONTROL VALVES			
ITEM NO.	CAL. CV	RTD CV	% OPEN

		SUCTION			DISCHARGE																		
STREAM ID	UNIT	1			2	FE-3043	3	FE-3012															
Design Case																							
Phase		LIQUID			LIQUID		LIQUID																
Vapor Fraction																							
Normal Flow Rate	kg/hr	62,200			62,200		67,280																
Over Design	%	0			0		0																
Rated Flow Rate	kg/hr	62,200			62,200		67,280																
Temperature	°C	40.0			40.0		40.0																
Pressure @Inlet	kg/cm²G	0.02			13.87	13.87	13.67	12.89															
Pressure @Destination	kg/cm²G	0.06			13.87	13.67	12.89	12.69															
Line Size	inch	8			6		6																
Equivalent Length	M	39.0			7.7		267.9																
Elevation Change	M	-1.0			0.0		4.8																
Fluid, Density	kg/m³	1,244.0			1,244.0		1,244.0																
Fluid, Viscosity	cP	7.43			7.43		7.43																
Velocity	m/sec	0.43			0.75		0.81																
Pres. Drop by Friction	kg/cm²	0.006			0.005	0.000	0.188	0.000															
Pres. Drop by Gravity	kg/cm²	-0.118			0.000	0.000	0.591	0.000															
Pressure Drop / 100 M	kg/cm²	0.016			0.061		0.070																
Equipment Pres. Drop	kg/cm²	0.07				0.20		0.2															
CV PRESSURE DROP	kg/cm²																						

LOTTE E&C 롯데건설주식회사	JOB NO.		PREPD BY: J.H.Kim	DATE: Sep. 26 '22	PAGE: 2 / 2	0
	SERVICE	Fresh/Wet Solvent Pump (PATH2)	CHKD BY: J.H.Myung	APPD BY: J.Y.Kim		

*** Result**

1) Diff. Pressure

Datasheet : 13.84 kg/cm2
Calculation : 13.81 kg/cm2
-> No problem

2) Line Size

Referece
- Suc. : Velocity : 1.2 ~ 2.4 m/s, ΔP/100m : 0.23 kg/cm2
- Disch. : Velocity : 1.8 ~ 2.4 m/s, ΔP/100m : 0.92 kg/cm2

Calculation :
-> No problem

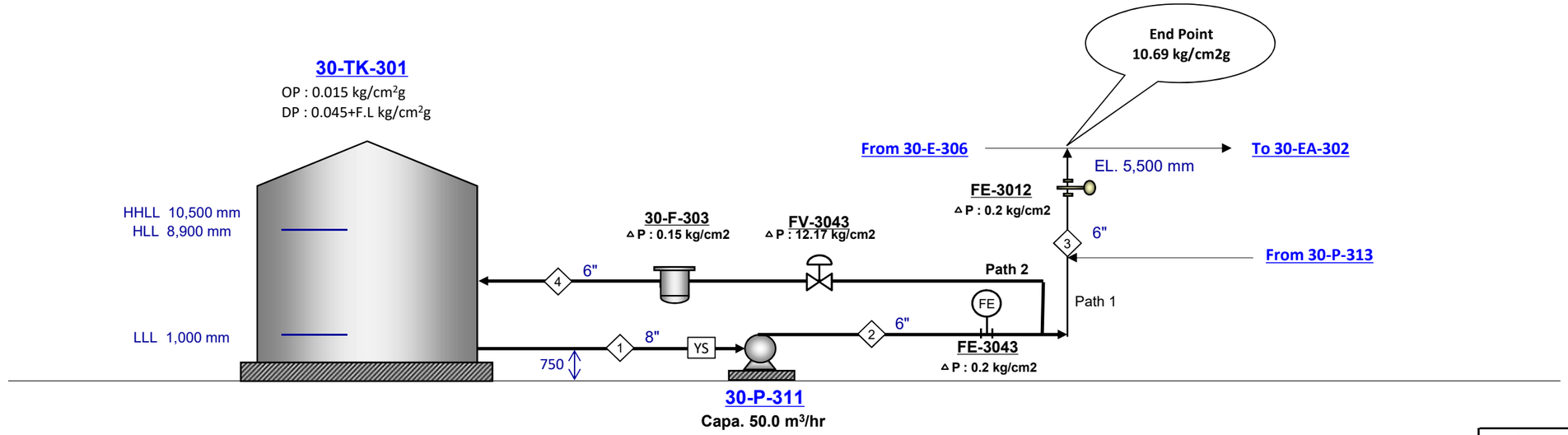

NOTE : 1. Assumed Data as below.
- Strainer △P = 0.07 kg/cm2
- Flowmeter △P = 0.2 kg/cm2
- Tank Foundation = 700 mm

CV Input Data		
Item No.		
Des. Cap.		
Density		
D.P		
Char.		

PUMP CALCULATION		
ITEM NUMBER	30-P-311	
SUCTION	30-TK-301	
Flow Rate	50.0	m3/hr
Operating Pres.	0.015	kg/cm².G
Design Pres.	0.045	kg/cm².G
Min. Static Head	1.7	meter
Max. Static Head	9.4	meter
Pump Shaft Level	0.75	meter
Vapor Pres.	0.014	kg/cm².A
Allowance	0	meter
Pipe Friction Loss	0.006	kg/cm²
Strainer	0.07	kg/cm²
Others		kg/cm²
Net Suction Pres.	0.06	kg/cm².G
Max. Suction Pres.	1.12	kg/cm².G
NPSH Available	8.65	meter
DISCHARGE		
Operating Pres.	0.015	kg/cm².G
Max. Static Head	11.2	meter
Pipe friction Loss	0.033	kg/cm².G
Pipe Gravity Loss	1.300	kg/cm³.G
Equip. Pres. Drop	0.4	kg/cm².G
Control Valves	12.2	kg/cm².G
Others		kg/cm².G
Disch. Press. Req'd	13.87	kg/cm².G
Diff. Pres.	13.81	kg/cm²
Diff. Head (Net)	111	meter
Hydr. Horsepower	18.8	KW
Est. Efficieny		%
Est. BHP		KW
Est. Shut-off Pres.	18.38	kg/cm².G
C.V dp / Friction	3178.91	%

CONTROL VALVES			
ITEM NO.	CAL. CV	RTD CV	% OPEN

		SUCTION			DISCHARGE																		
STREAM ID	UNIT	1			2	FE-3043	FV-3043	F-303	4														
Design Case																							
Phase		LIQUID			LIQUID				LIQUID														
Vapor Fraction																							
Normal Flow Rate	kg/hr	62,200			62,200				62,200														
Over Design	%	0			0				0														
Rated Flow Rate	kg/hr	62,200			62,200				62,200														
Temperature	°C	40.0			40.0				40.0														
Pressure @Inlet	kg/cm²G	0.015			13.87	13.86	13.66	1.49	1.34														
Pressure @Destination	kg/cm²G	0.06			13.86	13.66	1.49	1.34	0.02														
Line Size	inch	8			6				6														
Equivalent Length	M	39.0			7.7				46.0														
Elevation Change	M	-1.0			0.0				10.5														
Fluid, Density	kg/m³	1,244.0			1,244.0				1,244.0														
Fluid, Viscosity	cP	7.43			7.43				7.43														
Velocity	m/sec	0.43			0.75				0.75														
Pres. Drop by Friction	kg/cm²	0.006			0.005	0.000	0.000	0.000	0.028														
Pres. Drop by Gravity	kg/cm²	-0.118			0.000	0.000	0.000	0.000	1.300														
Pressure Drop / 100 M	kg/cm²	0.016			0.061				0.061														
Equipment Pres. Drop	kg/cm²	0.07				0.20		0.15															
CV PRESSURE DROP	kg/cm²						12.17																

LINE IDENTIFICATION		1	2	3	4	5	6	7	8	9	10	11	12	13	14	15	16	17
SIMU. STREAM ID																		
SERVICE			Pump DS		PUMP MIN. FLOW													
TYPE OF FLOW	(L/V/2PH)	LIQUID	LIQUID	LIQUID	LIQUID													
OPERATING CONDITION																		
Temperature	C	40	40	40	40													
Pressure @up	Kg/cm2.G																	
Pressure @down	Kg/cm2.G	0.11	0.00	-0.78	-1.33													
PIPING INFORMATION																		
Nominal Size	inch	8.0	6.0	6.0	6.0													
Schedule or Class	-	40	40	40	40													
Line length,straight	m	30.0	5.0	174.8	30.0													
Eqivalent Length Over Design Factor	-	0.25	0.50	0.50	0.50													
Net Elevation Change	m	(1.0)	0.0	4.8	10.5													
Equivalent Length	m	39.0	7.7	267.9	46.0													
Pipe inside Dia.	m	0.203	0.154	0.154	0.154													
Wall Roughness	mm	0.046	0.046	0.046	0.046													
LIQUID PHASE CALCULATION																		
Flow Rate	Kg/h	62,200	62,200	67,280	62,200													
Flow Rate Design Margin	%	0	0	0	0													
Density @PT	Kg/m3	1244.0	1244.0	1244.0	1244.0													
Viscosity @PT	cP	7.428	7.428	7.428	7.428													
Surface Tension	dyn/cm																	
Flow Rate, rated	kg/h	62,200	62,200	67,280	62,200													
Vol. Flow	m3/hr	50.0	50.0	54.1	50.0													
Velocity	m/s	0.43	0.75	0.81	0.75													
Reynolds No	-	1.46E+04	1.92E+04	2.08E+04	1.92E+04													
Friction Factor	-	0.0284	0.0268	0.0263	0.0268													
Press. @Out	Kg/cm2.G	0.112	-0.005	-0.779	-1.328													
Pressure Drop by Friction	Kg/cm2	0.0064	0.005	0.188	0.028													
Pressure Drop by Gravity	Kg/cm2	-0.118	0.000	0.591	1.300													
Dp / 100 m (by friction)	Kg/cm2	0.0165	0.0612	0.0703	0.0612													
VAPOR PHASE CALCULATION																		
Flow Rate,max op	Kg/h																	
Flow Rate Design Margin	%																	
Density @PT	Kg/m3																	
or MW	(-)																	
Compr. Z	(-)																	
Viscosity @PT	cP																	
Flow Rate,rated	Kg/h																	
Vol. Flow @in	m3/sec																	
Gas Density @in	Kg/m3																	
Velocity @in	m/s																	
Reynolds No	-																	
Friction Factor	-																	
Gas Dns @Out	Kg/m3																	
Velocity @Out	m/s																	
Mach no. @Out	-																	
Press. @Out	Kg/cm2.G																	
Pressure Drop by Friction	Kg/cm2																	
Pressure Drop by Gravity	Kg/cm2																	
Dp / 100 m (by friction)	Kg/cm2																	

30-P-313

LOTTE E&C 롯데건설주식회사

JOB NO.		PREPD BY:	J.H.Kim	DATE:	Sep. 26 '22
SERVICE	HC Transfer Pump	CHKD BY:	J.H.Myung	APPD BY:	J.Y.Kim

PAGE: 1 / 1 (0)

PUMP CALCULATION

ITEM NUMBER	30-P-313	
SUCTION	30-TK-301	
Flow Rate	4.0	m3/hr
Operating Pres.	0.015	kg/cm^2.G
Design Pres.	0.045	kg/cm^2.G
Min. Static Head	1.7	meter
Max. Static Head	11.2	meter
Pump Shaft Level	0.75	meter
Vapor Pres.	0.247	kg/cm^2.A
Allowance	0	meter
Pipe Friction Loss	0.019	kg/cm^2
Strainer	0.07	kg/cm^2
Others		kg/cm^2
Net Suction Pres.	0.00	kg/cm^2.G
Max. Suction Pres.	0.85	kg/cm^2.G
NPSH Available	10.20	meter
DISCHARGE		
Operating Pres.	10.69	kg/cm^2.G
Max. Static Head	5.5	meter
Pipe friction Loss	0.045	kg/cm^2.G
Pipe Gravity Loss	0.366	kg/cm$^{3.G}$
Equip. Pres. Drop	0.2	kg/cm^2.G
Control Valves	0.0	kg/cm^2.G
Others		kg/cm^2.G
Disch. Press. Req'd	11.30	kg/cm^2.G
Diff. Pres.	11.30	kg/cm^2
Diff. Head (Net)	147	meter
Hydr. Horsepower	1.2	KW
Est. Efficieny		%
Est. BHP		KW
Est. Shut-off Pres.	14.98	kg/cm^2.G
C.V dp / Friction	0.00	%

CONTROL VALVES

ITEM NO.	CAL. CV	RTD CV	% OPEN

*** Result**

1) Line Size

Reference

- Suc. : Velocity : 1.2 ~ 2.4 m/s, ΔP/100m : 0.23 kg/cm2
- Disch. : Velocity : 1.8 ~ 2.4 m/s, ΔP/100m : 0.92 kg/cm2

Calculation :

-> No problem

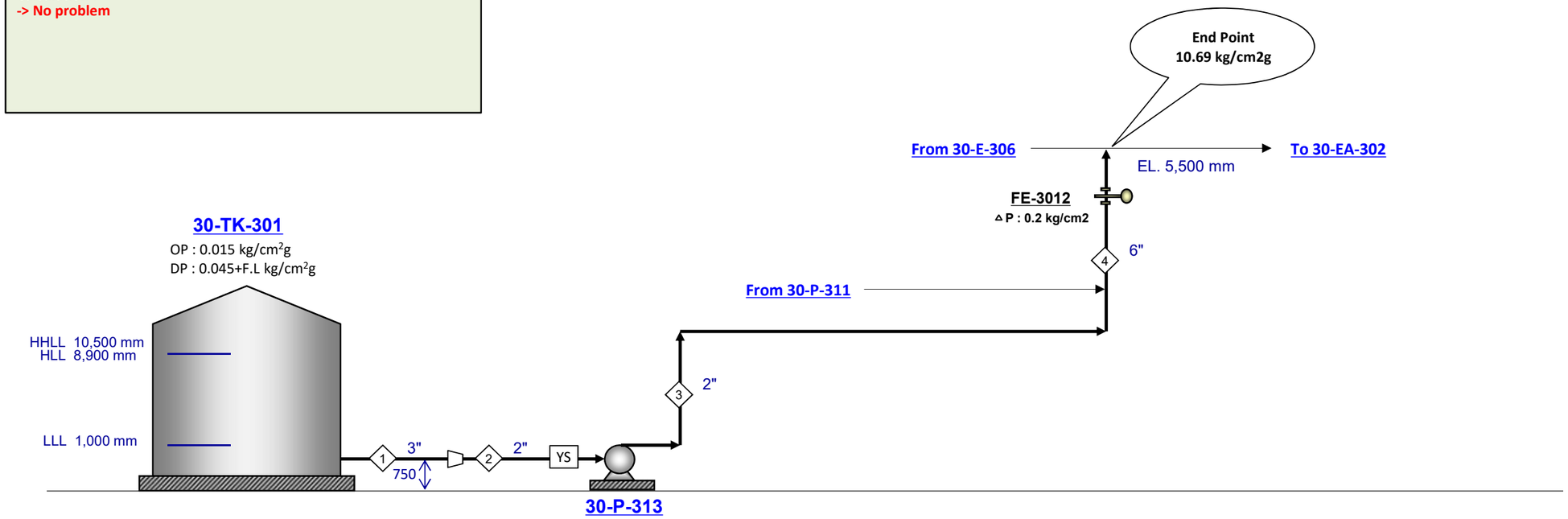

NOTE : 1. Assumed Data as below.
- Strainer △P = 0.07 kg/cm2
- Tank Foundation = 700 mm

CV Input Data		
Item No.		
Des. Cap.		
Density		
D.P		
Char.		

		SUCTION			DISCHARGE		
STREAM ID	UNIT	1	2		3	FE-3012	4
Design Case							
Phase		LIQUID	LIQUID		LIQUID		LIQUID
Vapor Fraction							
Normal Flow Rate	kg/hr	3,080	3,080		3,080		3,080
Over Design	%	0	0		0		0
Rated Flow Rate	kg/hr	3,080	3,080		3,080		3,080
Temperature	°C	40.0	40.0		40.0		40.0
Pressure @Inlet	kg/cm^{2}G	0.02	0.02		11.30	11.26	11.06
Pressure @Destination	kg/cm^{2}G	0.02	0.00		11.26	11.06	10.69
Line Size	inch	3	2		2		6
Equivalent Length	M	12.0	27.1		67.7		267.9
Elevation Change	M	-1.0	0.0		0.0		4.8
Fluid, Density	kg/m^3	770.0	770.0		770.0		770.0
Fluid, Viscosity	cP	8.200	8.200		8.200		8.200
Velocity	m/sec	0.23	0.58		0.58		0.06
Pres. Drop by Friction	kg/cm^2	0.001	0.017		0.044	0.000	0.002
Pres. Drop by Gravity	kg/cm^2	-0.073	0.000		0.000	0.000	0.366
Pressure Drop / 100 M	kg/cm^2	0.010	0.064		0.064		0.001
Equipment Pres. Drop	kg/cm^2	0.07				0.20	
CV PRESSURE DROP	kg/cm^2						

LINE IDENTIFICATION		1	2	3	4	5	6	7	8	9	10	11	12	13	14	15	16	17
SIMU. STREAM ID																		
SERVICE																		
TYPE OF FLOW	(L/V/2PH)	LIQUID	LIQUID	LIQUID	LIQUID													
OPERATING CONDITION																		
Temperature	C	40	40	40	40													
Pressure @up	Kg/cm2.G																	
Pressure @down	Kg/cm2.G	0.07	-0.02	-0.04	-0.37													
PIPING INFORMATION																		
Nominal Size	inch	3.0	2.0	2.0	6.0													
Schedule or Class	-	40	80	80	40													
Line length,straight	m	10.0	20.0	50.0	174.8													
Eqivalent Length Over Design Factor	-	0.25	0.50	0.50	0.50													
Net Elevation Change	m	(1.0)	0.0	0.0	4.8													
Equivalent Length	m	12.0	27.1	67.7	267.9													
Pipe inside Dia.	m	0.078	0.049	0.049	0.154													
Wall Roughness	mm	0.046	0.046	0.046	0.046													
LIQUID PHASE CALCULATION																		
Flow Rate	Kg/h	3,080	3,080	3,080	3,080													
Flow Rate Design Margin	%	0	0	0	0													
Density @PT	Kg/m3	770.0	770.0	770.0	770.0													
Viscosity @PT	cP	8.200	8.200	8.200	8.200													
Surface Tension	dyn/cm																	
Flow Rate, rated	kg/h	3,080	3,080	3,080	3,080													
Vol. Flow	m3/hr	4.0	4.0	4.0	4.0													
Velocity	m/s	0.23	0.58	0.58	0.06													
Reynolds No	-	1.70E+03	2.70E+03	2.70E+03	8.62E+02													
Friction Factor	-	0.0375	0.0237	0.0237	0.0742													
Press. @Out	Kg/cm2.G	0.072	-0.017	-0.044	-0.368													
Pressure Drop by Friction	Kg/cm2	0.0012	0.017	0.044	0.002													
Pressure Drop by Gravity	Kg/cm2	-0.073	0.000	0.000	0.366													
Dp / 100 m (by friction)	Kg/cm2	0.0103	0.0643	0.0643	0.0007													
VAPOR PHASE CALCULATION																		
Flow Rate,max op	Kg/h																	
Flow Rate Design Margin	%																	
Density @PT	Kg/m3																	
or MW	(-)																	
Compr. Z	(-)																	
Viscosity @PT	cP																	
Flow Rate,rated	Kg/h																	
Vol. Flow @in	m3/sec																	
Gas Density @in	Kg/m3																	
Velocity @in	m/s																	
Reynolds No	-																	
Friction Factor	-																	
Gas Dns @Out	Kg/m3																	
Velocity @Out	m/s																	
Mach no. @Out	-																	
Press. @Out	Kg/cm2.G																	
Pressure Drop by Friction	Kg/cm2																	
Pressure Drop by Gravity	Kg/cm2																	
Dp / 100 m (by friction)	Kg/cm2																	

30-P-314A/B

LOTTE E&C 롯데건설주식회사	JOB NO.		PREPD BY:	J.H.Kim	DATE:	Sep. 26 '22	PAGE:	1 / 3	0
	SERVICE	C7 Cut Feed Pumps (PATH1)	CHKD BY:	J.H.Myung	APPD BY:	J.Y.Kim			

*** Result**

1) Line Size

Reference

- Suc. : Velocity : 1.2 ~ 2.4 m/s, ΔP/100m : 0.23 kg/cm2
- Disch. : Velocity : 2.4 ~ 3.0 m/s, ΔP/100m : 0.92 kg/cm2

Calculation :

-> No problem

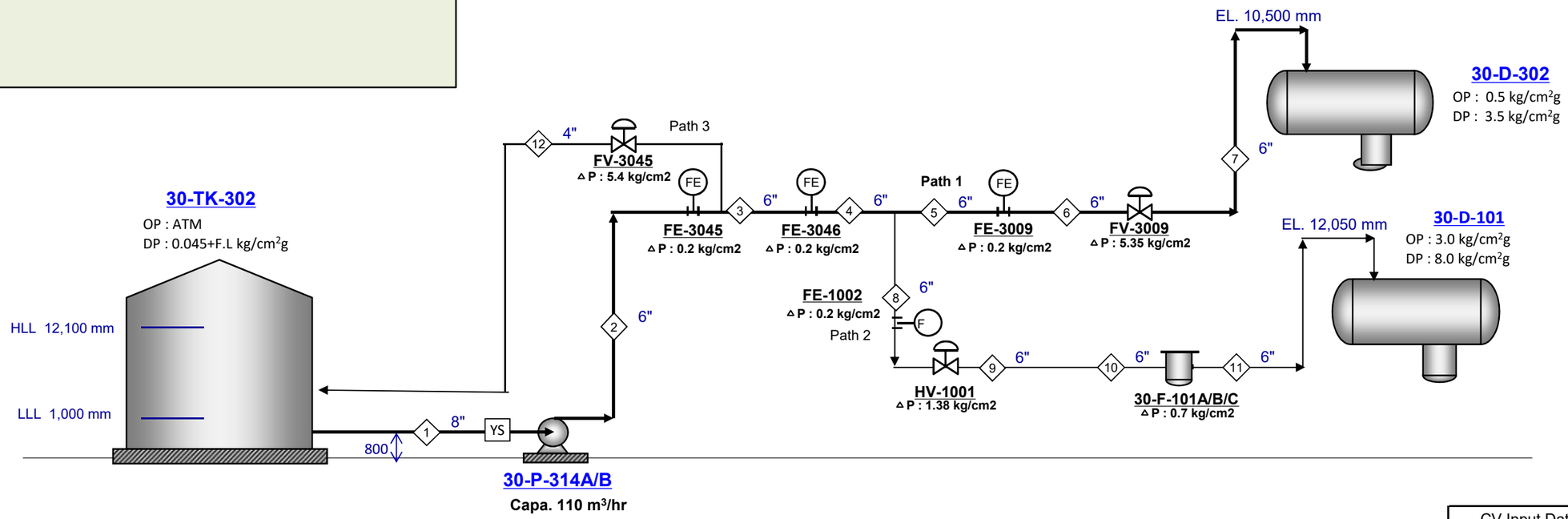

NOTE : 1. Assumed Data as below.
- Strainer △P = 0.07 kg/cm2
- Tank Foundation = 700 mm

PUMP CALCULATION		
ITEM NUMBER	30-P-314A/B	
SUCTION	30-TK-302	
Flow Rate	110.0	m3/hr
Operating Pres.	ATM	kg/cm².G
Design Pres.	0.045	kg/cm².G
Min. Static Head	1.7	meter
Max. Static Head	12.8	meter
Pump Shaft Level	0.8	meter
Vapor Pres.	0.091	kg/cm².A
Allowance	0	meter
Pipe Friction Loss	0.008	kg/cm²
Strainer	0.07	kg/cm²
Others		kg/cm²
Net Suction Pres.	0.00	kg/cm².G
Max. Suction Pres.	1.05	kg/cm².G
NPSH Available	11.23	meter
DISCHARGE		
Operating Pres.	0.5	kg/cm².G
Max. Static Head	10.5	meter
Pipe friction Loss	0.383	kg/cm².G
Pipe Gravity Loss	0.811	kg/cm³.G
Equip. Pres. Drop	0.6	kg/cm².G
Control Valves	5.4	kg/cm².G
Others	0.01	kg/cm².G
Disch. Press. Req'd	7.65	kg/cm².G
Diff. Pres.	7.66	kg/cm²
Diff. Head (Net)	92	meter
Hydr. Horsepower	22.9	KW
Est. Efficieny		%
Est. BHP		KW
Est. Shut-off Pres.	10.62	kg/cm².G
C.V dp / Friction	538.88	%

CV Input Data		
Item No.		
Des. Cap.		
Density		
D.P		
Char.		

CONTROL VALVES

ITEM NO.	CAL. CV	RTD CV	% OPEN

		SUCTION			DISCHARGE																	
STREAM ID	UNIT	1			2	FE-3045	3	FE-3046	4	5	FE-3009	6	FV-3009	7								
Design Case																						
Phase		LIQUID			LIQUID		LIQUID		LIQUID	LIQUID		LIQUID		LIQUID								
Vapor Fraction																						
Normal Flow Rate	kg/hr	83,600			83,600		83,600		83,600	83,600		83,600		83,600								
Over Design	%	10			10		10		10	10		10		10								
Rated Flow Rate	kg/hr	91,960			91,960		91,960		91,960	91,960		91,960		91,960								
Temperature	°C	40.0			40.0		40.0		40.0	40.0		40.0		40.0								
Pressure @Inlet	kg/cm²G	ATM			7.65	7.63	7.43	7.42	7.22	7.20	7.18	6.98	6.96	1.61								
Pressure @Destination	kg/cm²G	0.00			7.63	7.43	7.42	7.22	7.20	7.18	6.98	6.96	1.61	0.51								
Line Size	inch	8			6		6		6	6		6		6								
Equivalent Length	M	26.0			15.3		15.3		15.3	15.3		15.3		229.9								
Elevation Change	M	-0.9			0.0		0.0		0.0	0.0		0.0		9.7								
Fluid, Density	kg/m³	836.0			836.0		836.0		836.0	836.0		836.0		836.0								
Fluid, Viscosity	cP	0.629			0.629		0.629		0.629	0.629		0.629		0.629								
Velocity	m/sec	0.95			1.64		1.64		1.64	1.64		1.64		1.64								
Pres. Drop by Friction	kg/cm²	0.008			0.019	0.000	0.019	0.000	0.019	0.019	0.000	0.019	0.000	0.287								
Pres. Drop by Gravity	kg/cm²	-0.075			0.000	0.000	0.000	0.000	0.000	0.000	0.000	0.000	0.000	0.811								
Pressure Drop / 100 M	kg/cm²	0.032			0.125		0.125		0.125					0.125								
Equipment Pres. Drop	kg/cm²	0.07				0.20		0.20			0.20											
CV PRESSURE DROP	kg/cm²												5.35									

LOTTE E&C 롯데건설주식회사	JOB NO.		PREPD BY:	J.H.Kim	DATE:	Sep. 26 '22	PAGE:	2 / 3	0
	SERVICE	C7 Cut Feed Pumps (PATH2)	CHKD BY:	J.H.Myung	APPD BY:	J.Y.Kim			

*** Result**

1) Line Size

Reference

- Suc. : Velocity : 1.2 ~ 2.4 m/s, ΔP/100m : 0.23 kg/cm2

- Disch. : Velocity : 2.4 ~ 3.0 m/s, ΔP/100m : 0.92 kg/cm2

Calculation :

-> No problem

GOVERNING

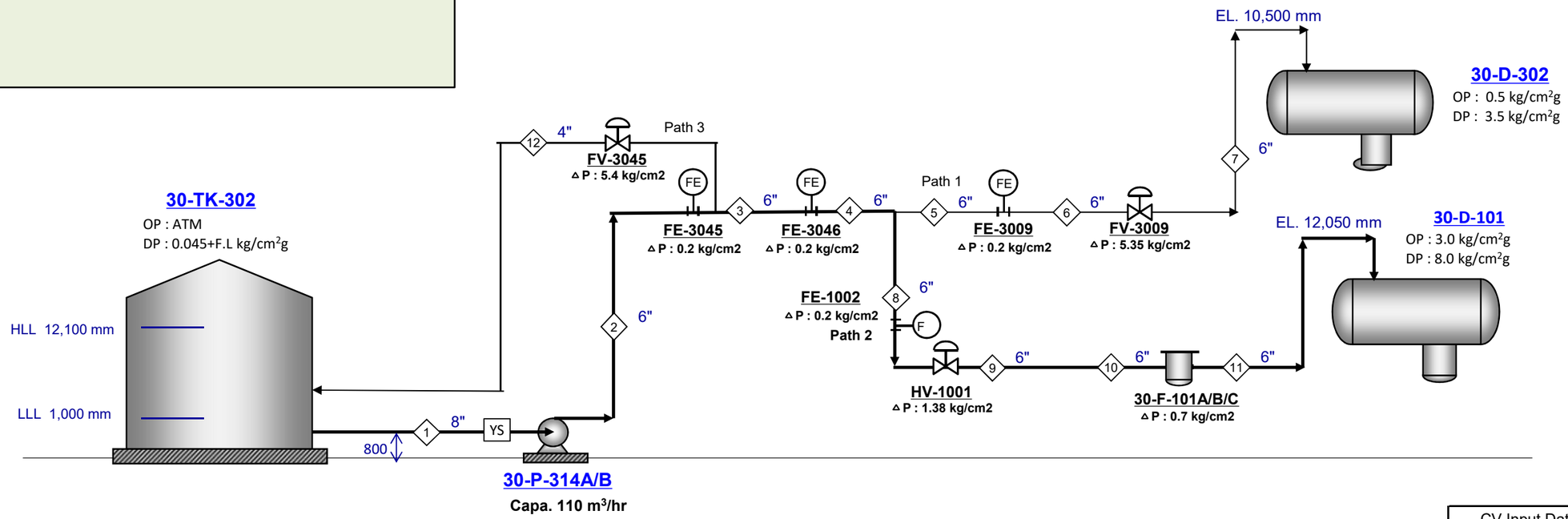

NOTE : 1. Assumed Data as below.
- Strainer △P = 0.07 kg/cm2
- Tank Foundation = 700 mm

Item No.		
Des. Cap.		
Density		
D.P		
Char.		

CV Input Data

PUMP CALCULATION		
ITEM NUMBER	**30-P-314A/B**	
SUCTION	30-TK-302	
Flow Rate	110.0	m3/hr
Operating Pres.	ATM	$kg/cm^2.G$
Design Pres.	0.045	$kg/cm^2.G$
Min. Static Head	1.7	meter
Max. Static Head	12.8	meter
Pump Shaft Level	0.8	meter
Vapor Pres.	0.091	$kg/cm^2.A$
Allowance	0	meter
Pipe Friction Loss	0.008	kg/cm^2
Strainer	0.07	kg/cm^2
Others		kg/cm^2
Net Suction Pres.	0.00	$kg/cm^2.G$
Max. Suction Pres.	1.05	$kg/cm^2.G$
NPSH Available	11.23	meter
DISCHARGE		
Operating Pres.	3.0	$kg/cm^2.G$
Max. Static Head	12.1	meter
Pipe friction Loss	0.517	$kg/cm^2.G$
Pipe Gravity Loss	0.941	$kg/cm^{3.G}$
Equip. Pres. Drop	1.3	$kg/cm^2.G$
Control Valves	1.4	$kg/cm^2.G$
Others	0.52	$kg/cm^2.G$
Disch. Press. Req'd	7.66	$kg/cm^2.G$
Diff. Pres.	7.66	kg/cm^2
Diff. Head (Net)	92	meter
Hydr. Horsepower	22.9	KW
Est. Efficieny		%
Est. BHP		KW
Est. Shut-off Pres.	10.62	$kg/cm^2.G$
C.V dp / Friction	59.06	%

CONTROL VALVES

ITEM NO.	CAL. CV	RTD CV	% OPEN

		SUCTION			DISCHARGE																	
STREAM ID	UNIT	1			2	FE-3045	3	FE-3046	4	8	FE-1002	HV-1001	9	10	F-101A/B	11						
Design Case																						
Phase		LIQUID			LIQUID		LIQUID		LIQUID	LIQUID			LIQUID	LIQUID		LIQUID						
Vapor Fraction																						
Normal Flow Rate	kg/hr	83,600			83,600		83,600		83,600	83,600			83,600	83,600		83,600						
Over Design	%	10			10		10		10	10			10	10		10						
Rated Flow Rate	kg/hr	91,960			91,960		91,960		91,960	91,960			91,960	91,960		91,960						
Temperature	°C	40.0			40.0		40.0		40.0	40.0			40.0	40.0		40.0						
Pressure @Inlet	kg/cm^2G	ATM			7.66	7.64	7.44	7.42	7.22	7.20	7.18	6.98	5.60	5.58	5.56	4.86						
Pressure @Destination	kg/cm^2G	0.00			7.64	7.44	7.42	7.22	7.20	7.18	6.98	5.60	5.58	5.56	4.86	3.52						
Line Size	inch	8			6		6		6	6			6	6		6						
Equivalent Length	M	26.0			15.3		15.3		15.3	15.3			15	15.3		321.9						
Elevation Change	M	-0.9			0.0		0.0		0.0	0.0			0	0.0		11						
Fluid, Density	kg/m^3	836.0			836.0		836.0		836.0	836.0			836.0	836.0		836.0						
Fluid, Viscosity	cP	0.629			0.629		0.629		0.629	0.629			0.629	0.629		0.63						
Velocity	m/sec	0.95			1.64		1.64		1.64	1.64			1.64	1.64		1.64						
Pres. Drop by Friction	kg/cm^2	0.008			0.019	0.000	0.019	0.000	0.019	0.019	0.000	0.000	0.019	0.019	0.000	0.402						
Pres. Drop by Gravity	kg/cm^2	-0.075			0.000	0.000	0.000	0.000	0.000	0.000	0.000	0.000	0.000	0.000	0.000	0.941						
Pressure Drop / 100 M	kg/cm^2	0.032			0.125		0.125		0.125					0.125		0.125						
Equipment Pres. Drop	kg/cm^2	0.07				0.20		0.20			0.20				0.70							
CV PRESSURE DROP	kg/cm^2											1.38										

LOTTE E&C 롯데건설주식회사	JOB NO.		PREPD BY:	J.H.Kim	DATE:	Sep. 26 '22	PAGE:	3 / 3	0
	SERVICE	C7 Cut Feed Pumps (PATH3)	CHKD BY:	J.H.Myung	APPD BY:	J.Y.Kim			

*** Result**

1) Line Size

Reference

- Suc. : Velocity : 1.2 ~ 2.4 m/s, ΔP/100m : 0.23 kg/cm2
- Disch. : Velocity : 2.4 ~ 3.0 m/s, ΔP/100m : 0.92 kg/cm2

Calculation :

-> No problem

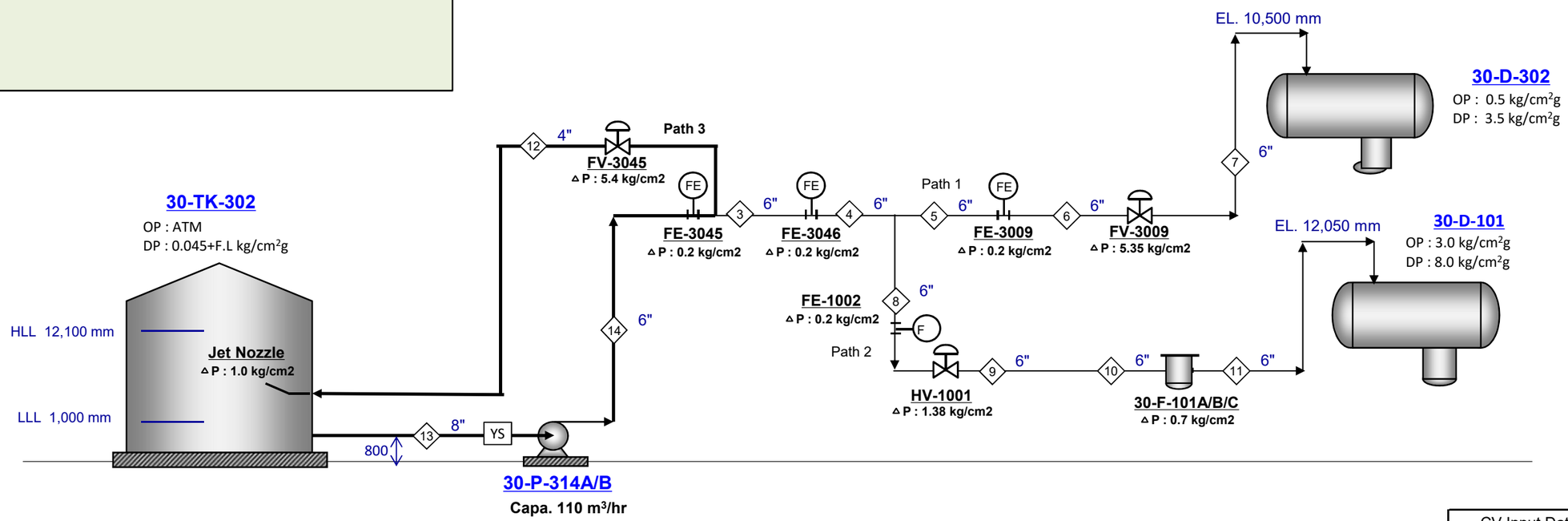

NOTE : 1. Assumed Data as below.
- Strainer △P = 0.07 kg/cm2
- Tank Foundation = 700 mm

	CV Input Data	
Item No.		
Des. Cap.		
Density		
D.P		
Char.		

PUMP CALCULATION

ITEM NUMBER	30-P-314A/B	
SUCTION	30-TK-302	
Flow Rate	110.0	m3/hr
Operating Pres.	ATM	kg/cm².G
Design Pres.	0.045	kg/cm².G
Min. Static Head	1.7	meter
Max. Static Head	12.8	meter
Pump Shaft Level	0.8	meter
Vapor Pres.	0.091	kg/cm².A
Allowance	0	meter
Pipe Friction Loss	0.001	kg/cm²
Strainer	0.07	kg/cm²
Others		kg/cm²
Net Suction Pres.	0.00	kg/cm².G
Max. Suction Pres.	1.05	kg/cm².G
NPSH Available	11.32	meter
DISCHARGE		
Operating Pres.	ATM	kg/cm².G
Max. Static Head	12.8	meter
Pipe friction Loss	0.040	kg/cm².G
Pipe Gravity Loss	1.003	kg/cm³.G
Equip. Pres. Drop	1.2	kg/cm².G
Control Valves	5.4	kg/cm².G
Others	0.02	kg/cm².G
Disch. Press. Req'd	7.66	kg/cm².G
Diff. Pres.	7.66	kg/cm²
Diff. Head (Net)	92	meter
Hydr. Horsepower	7.9	KW
Est. Efficieny		%
Est. BHP		KW
Est. Shut-off Pres.	10.62	kg/cm².G
C.V dp / Friction	428.47	%

CONTROL VALVES

ITEM NO.	CAL. CV	RTD CV	% OPEN

		SUCTION			DISCHARGE																		
STREAM ID	UNIT	13			14	FE-3045	FV-3045	12	Jet Nozzle														
Design Case																							
Phase		LIQUID			LIQUID			LIQUID															
Vapor Fraction																							
Normal Flow Rate	kg/hr	31,768			31,768			31,768															
Over Design	%	0			0			0															
Rated Flow Rate	kg/hr	31,768			31,768			31,768															
Temperature	°C	40.0			40.0			40.0															
Pressure @Inlet	kg/cm²G	ATM			7.66	7.66	7.46	2.06	1.02														
Pressure @Destination	kg/cm²G	-0.01			7.66	7.46	2.06	1.02	0.02														
Line Size	inch	8			6			4															
Equivalent Length	M	26.0			15.3			29.1															
Elevation Change	M	-0.7			0.0			12.0															
Fluid, Density	kg/m³	836.0			836.0			836.0															
Fluid, Viscosity	cP	0.629			0.629			0.629															
Velocity	m/sec	0.33			0.57			1.29															
Pres. Drop by Friction	kg/cm²	0.001			0.003	0.000	0.000	0.038	0.000														
Pres. Drop by Gravity	kg/cm²	-0.059			0.000	0.000	0.000	1.003	0.000														
Pressure Drop / 100 M	kg/cm²	0.004			0.017			0.130															
Equipment Pres. Drop	kg/cm²	0.07				0.20			1.00														
CV PRESSURE DROP	kg/cm²						5.40																

LINE IDENTIFICATION		1	2	3	4	5	6	7	8	9	10	11	12	13	14	15	16	17	18
SIMU. STREAM ID						Path 1			Path 2										
SERVICE													PUMP MIN. FLOW						
TYPE OF FLOW	(L/V/2PH)	LIQUID	LIQUID	LIQUID	LIQUID	LIQUID	LIQUID	LIQUID	LIQUID	LIQUID	LIQUID	LIQUID	LIQUID	LIQUID	LIQUID				
OPERATING CONDITION																			
Temperature	C	40	40	40	40	40	40	40	40	40	40	40	40	40	40				
Pressure @up	Kg/cm2.G																		
Pressure @down	Kg/cm2.G	0.07	-0.02	-0.02	-0.02	-0.02	-0.02	-1.10	-0.02	-0.02	-0.02	-1.34	-1.04	0.06	0.00				
PIPING INFORMATION																			
Nominal Size	inch	8.0	6.0	6.0	6.0	6.0	6.0	6.0	6.0	6.0	6.0	6.0	4.0	8.0	6.0				
Schedule or Class	-	40	40	40	40	40	40	40	40	40	40	40	40	40	40				
Line length,straight	m	20.0	10.0	10.0	10.0	10.0	10.0	150.0	10.0	10.0	10.0	210.0	20.0	20.0	10.0				
Eqivalent Length Over Design Factor	-	0.25	0.50	0.50	0.50	0.50	0.50	0.50	0.50	0.50	0.50	0.50	0.50	0.25	0.50				
Net Elevation Change	m	(0.9)	0.0	0.0	0.0	0.0	0.0	9.7	0.0	0.0	0.0	11.3	12.0	(0.7)	0.0				
Equivalent Length	m	26.0	15.3	15.3	15.3	15.3	15.3	229.9	15.3	15.3	15.3	321.9	29.1	26.0	15.3				
Pipe inside Dia.	m	0.203	0.154	0.154	0.154	0.154	0.154	0.154	0.154	0.154	0.154	0.154	0.102	0.203	0.154				
Wall Roughness	mm	0.046	0.046	0.046	0.046	0.046	0.046	0.046	0.046	0.046	0.046	0.046	0.046	0.046	0.046				
LIQUID PHASE CALCULATION																			
Flow Rate	Kg/h	83,600	83,600	83,600	83,600	83,600	83,600	83,600	83,600	83,600	83,600	83,600	31,768	31,768	31,768				
Flow Rate Design Margin	%	10	10	10	10	10	10	10	10	10	10	10	0	0	0				
Density @PT	Kg/m3	836.0	836.0	836.0	836.0	836.0	836.0	836.0	836.0	836.0	836.0	836.0	836.0	836.0	836.0				
Viscosity @PT	cP	0.629	0.629	0.629	0.629	0.629	0.629	0.629	0.629	0.629	0.629	0.629	0.629	0.629	0.629				
Surface Tension	dyn/cm																		
Flow Rate, rated	kg/h	91,960	91,960	91,960	91,960	91,960	91,960	91,960	91,960	91,960	91,960	91,960	31,768	31,768	31,768				
Vol. Flow	m3/hr	110.0	110.0	110.0	110.0	110.0	110.0	110.0	110.0	110.0	110.0	110.0	38.0	38.0	38.0				
Velocity	m/s	0.95	1.64	1.64	1.64	1.64	1.64	1.64	1.64	1.64	1.64	1.64	1.29	0.33	0.57				
Reynolds No	-	2.55E+05	3.36E+05	3.36E+05	3.36E+05	3.36E+05	3.36E+05	3.36E+05	3.36E+05	3.36E+05	3.36E+05	3.36E+05	1.75E+05	8.81E+04	1.16E+05				
Friction Factor	-	0.0168	0.0168	0.0168	0.0168	0.0168	0.0168	0.0168	0.0168	0.0168	0.0168	0.0168	0.0188	0.0195	0.0190				
Press. @Out	Kg/cm2.G	0.067	-0.019	-0.019	-0.019	-0.019	-0.019	-1.098	-0.019	-0.019	-0.019	-1.342	-1.041	0.057	-0.003				
Pressure Drop by Friction	Kg/cm2	0.0082	0.019	0.019	0.019	0.019	0.019	0.287	0.019	0.019	0.019	0.402	0.038	0.001	0.003				
Pressure Drop by Gravity	Kg/cm2	-0.075	0.000	0.000	0.000	0.000	0.000	0.811	0.000	0.000	0.000	0.941	1.003	-0.059	0.000				
Dp / 100 m (by friction)	Kg/cm2	0.0316	0.1249	0.1249	0.1249	0.1249	0.1249	0.1249	0.1249	0.1249	0.1249	0.1249	0.1295	0.0044	0.0169				
VAPOR PHASE CALCULATION																			
Flow Rate,max op	Kg/h																		
Flow Rate Design Margin	%																		
Density @PT	Kg/m3																		
or MW	(-)																		
Compr. Z	(-)																		
Viscosity @PT	cP																		
Flow Rate,rated	Kg/h																		
Vol. Flow @in	m3/sec																		
Gas Density @in	Kg/m3																		
Velocity @in	m/s																		
Reynolds No	-																		
Friction Factor	-																		
Gas Dns @Out	Kg/m3																		
Velocity @Out	m/s																		
Mach no. @Out	-																		
Press. @Out	Kg/cm2.G																		
Pressure Drop by Friction	Kg/cm2																		
Pressure Drop by Gravity	Kg/cm2																		
Dp / 100 m (by friction)	Kg/cm2																		

30-P-401A/B

LOTTE E&C 롯데건설주식회사	JOB NO.		PREPD BY:	J.H.Kim	DATE:	Sep. 26 '22	PAGE:	1 / 2	0
	SERVICE	Clay Tower Charge Pump (PATH1)	CHKD BY:	J.H.Myung	APPD BY:	J.Y.Kim			

*** Result**

1) Diff. Pressure

Datasheet : 23.2 kg/cm2
Calculation : 23.19 kg/cm2
-> No problem

2) Line Size

Reference
- Suc. : Velocity : 1.2 ~ 2.4 m/s, ΔP/100m : 0.23 kg/cm2
- Disch. : Velocity : 1.8 ~ 2.4 m/s, ΔP/100m : 0.92 kg/cm2

Calculation :
-> No problem

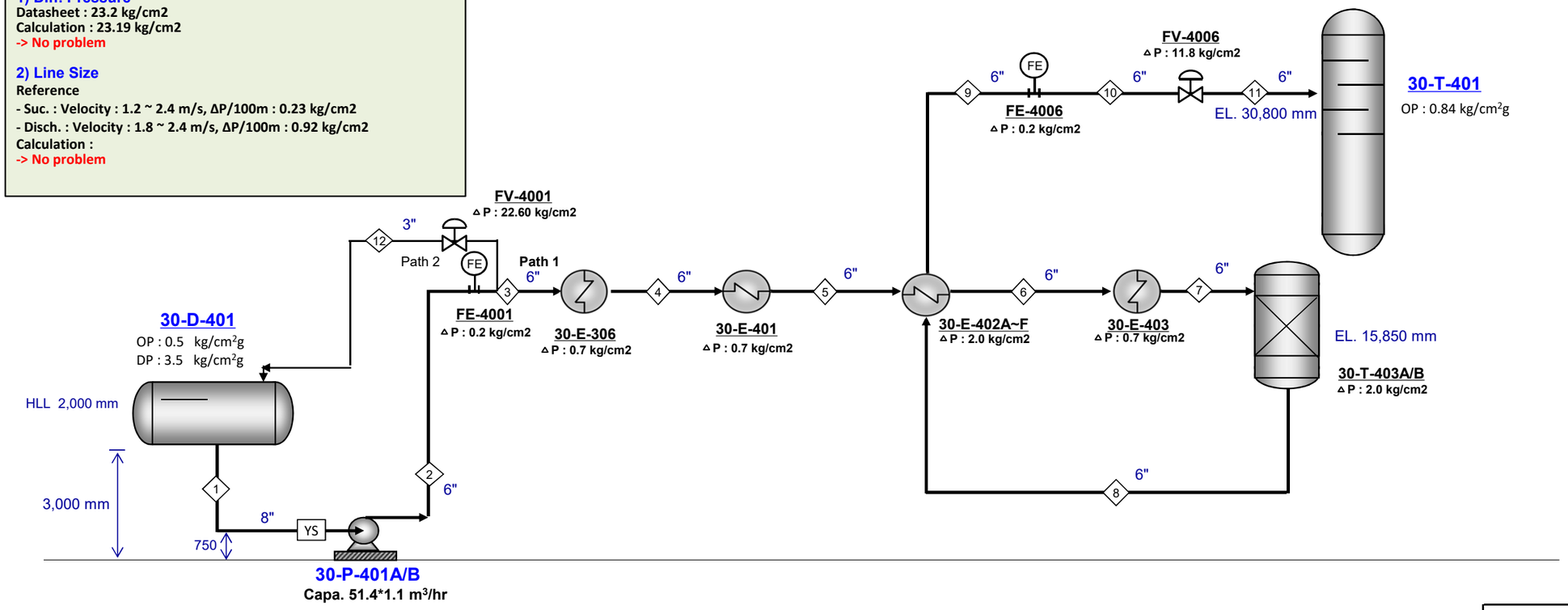

PUMP CALCULATION		
ITEM NUMBER	30-P-401A/B	
SUCTION		
Flow Rate	56.6	m3/hr
Operating Pres.	0.5	kg/cm².G
Design Pres.	3.5	kg/cm².G
Min. Static Head	3	meter
Max. Static Head	5	meter
Pump Shaft Level	0.75	meter
Vapor Pres.	0.289	kg/cm².A
Allowance	0	meter
Pipe Friction Loss	0.002	kg/cm²
Strainer	0.07	kg/cm²
Others		kg/cm²
Net Suction Pres.	0.62	kg/cm².G
Max. Suction Pres.	3.86	kg/cm².G
NPSH Available	15.91	meter
DISCHARGE	30-T-401	
Operating Pres.	0.84	kg/cm².G
Max. Static Head	30.8	meter
Pipe friction Loss	0.322	kg/cm².G
Pipe Gravity Loss	2.353	kg/cm³.G
Equip. Pres. Drop	8.5	kg/cm².G
Control Valves	11.8	kg/cm².G
Others		kg/cm².G
Disch. Press. Req'd	23.81	kg/cm².G
Diff. Pres.	23.19	kg/cm²
Diff. Head (Net)	270	meter
Hydr. Horsepower	35.7	KW
Est. Efficieny		%
Est. BHP		KW
Est. Shut-off Pres.	32.86	kg/cm².G
C.V dp / Friction	133.76	%

NOTE : 1. Assumed Data as below.
- Strainer △P = 0.07 kg/cm2
- Flowmeter △P = 0.2 kg/cm2

CV Input Data		
Item No.		
Des. Cap.		
Density		
D.P		
Char.		

CONTROL VALVES

ITEM NO.	CAL. CV	RTD CV	% OPEN

STREAM ID	UNIT	SUCTION 1			DISCHARGE 2	FE-4001	3	30-E-306	4	30-E-401	5	30-E-402A~F	6	30-E-403	7	30-T-403A/B	8	30-E-402A~F	9	FE-4006	10	FV-4006	11
Design Case																							
Phase		LIQUID			LIQUID		LIQUID		LIQUID		LIQUID		LIQUID		LIQUID		LIQUID		LIQUID		LIQUID		2PH
Vapor Fraction																							0.048
Normal Flow Rate	kg/hr	44,122			44,122		44,122		44,122		44,122		44,122		44,122		44,122		44,122		44,122		44,122
Over Design	%	10			10		10		10		10		10		10		10		10		10		10
Rated Flow Rate	kg/hr	48,534			48,534		48,534		48,534		48,534		48,534		48,534		48,534		48,534		48,534		48,534
Temperature	°C	40.0			40.0		40.0		85.0		95.6		180.4		195.0		195.0		114.0		114.0		105.0
Pressure @Inlet	kg/cm²G	0.50			23.81	23.81	23.61	23.55	22.85	22.83	22.13	22.04	20.04	20.03	19.33	19.32	17.32	17.31	15.31	12.90	12.70	12.69	0.89
Pressure @Destination	kg/cm²G	0.62			23.81	23.61	23.55	22.85	22.83	22.13	22.04	20.04	20.03	19.33	19.32	17.32	17.31	15.31	12.90	12.70	12.69	0.89	0.84
Line Size	inch	8			6		6		6		6		6		6		6		6		6		6
Equivalent Length	M	26.0			15.3		180.9		46.0		240.7		23.0		24.5		36.8		168.6		7.7		15.3
Elevation Change	M	-2.3			0.0		0.0		0.0		0.0		0.0		0		0		30		0		0
Fluid, Density	kg/m³	857.7			859.2		859.2		815.6		804.4		697.0		674.4		673.2		782.9		782.9		209.5
Fluid, Viscosity	cP	0.487			0.487		0.487		0.300		0.271		0.140		0.127		0.127		0.231		0.231		
Velocity	m/sec	0.49			0.84		0.84		0.89		0.90		1.04		1.07		1.07		0.92		0.92		
Pres. Drop by Friction	kg/cm²	0.002			0.005	0.000	0.064	0.000	0.016	0.000	0.086	0.000	0.009	0.000	0.010	0.000	0.015	0.000	0.061	0.000	0.003	0.000	0.053
Pres. Drop by Gravity	kg/cm²	-0.193			0.000	0.000	0.000	0.000	0.000	0.000	0.000	0.000	0.000	0.000	0.000	0.000	0.000	0.000	2.353	0.000	0.000	0.000	0.000
Pressure Drop / 100 M	kg/cm²	0.009			0.035		0.035		0.035		0.036		0.039		0.040		0.040		0.036		0.036		0.348
Equipment Pres. Drop	kg/cm²	0.07				0.20		0.70		0.70		2.00		0.70		2.00		2.00		0.20			
CV PRESSURE DROP	kg/cm²																					11.8	

LOTTE E&C 롯데건설주식회사	JOB NO.		PREPD BY:	J.H.Kim	DATE:	Sep. 26 '22	PAGE:	2 / 2	0
	SERVICE	Clay Tower Charge Pump (PATH2)	CHKD BY:	J.H.Myung	APPD BY:	J.Y.Kim			

*** Result**

1) Diff. Pressure

Datasheet : 23.2 kg/cm2
Calculation : 23.2 kg/cm2
-> No problem

2) Line Size

Reference
- Suc. : Velocity : 1.2 ~ 2.4 m/s, ΔP/100m : 0.23 kg/cm2
- Disch. : Velocity : 1.8 ~ 2.4 m/s, ΔP/100m : 0.92 kg/cm2

Calculation :
-> No problem

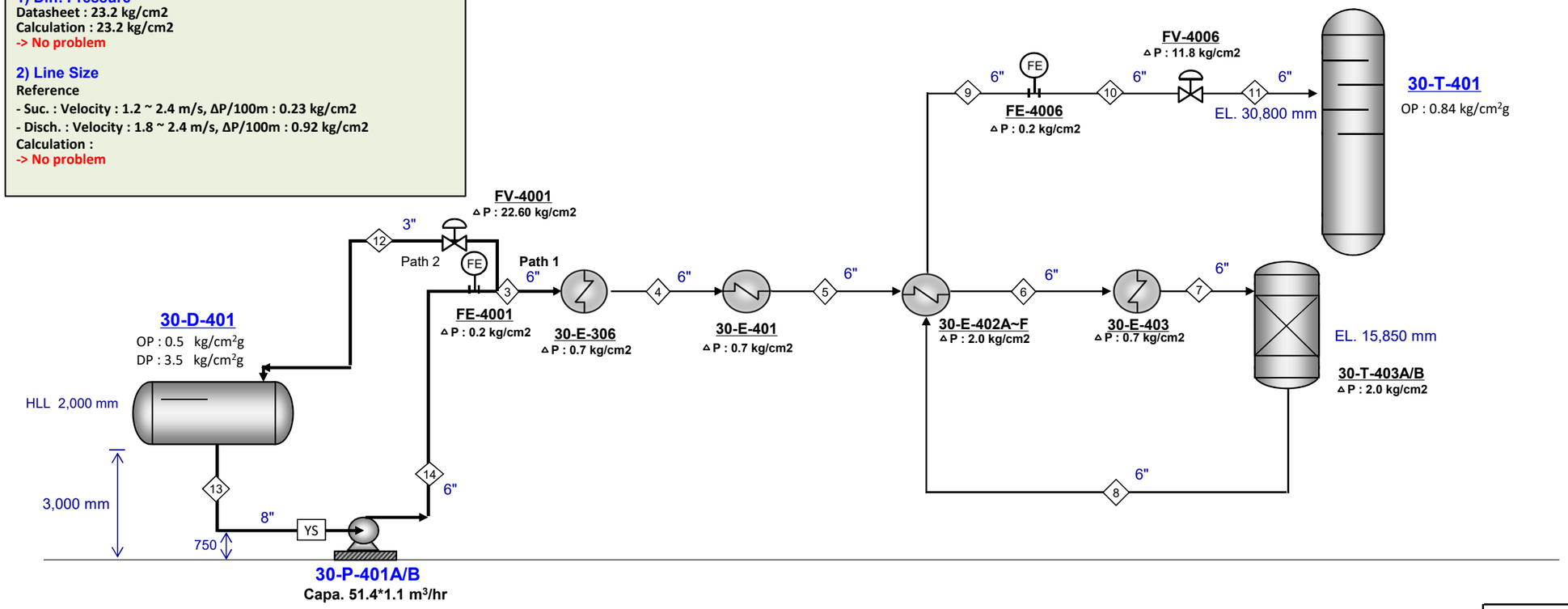

PUMP CALCULATION		
ITEM NUMBER	30-P-401A/B	
SUCTION		
Flow Rate	56.6	m3/hr
Operating Pres.	0.5	kg/cm².G
Design Pres.	3.5	kg/cm².G
Min. Static Head	3	meter
Max. Static Head	5	meter
Pump Shaft Level	0.75	meter
Vapor Pres.	0.289	kg/cm².A
Allowance	0	meter
Pipe Friction Loss	0.001	kg/cm²
Strainer	0.07	kg/cm²
Others		kg/cm²
Net Suction Pres.	0.62	kg/cm².G
Max. Suction Pres.	3.86	kg/cm².G
NPSH Available	15.93	meter
DISCHARGE		
Operating Pres.	0.5	kg/cm².G
Max. Static Head	5.7	meter
Pipe friction Loss	0.093	kg/cm².G
Pipe Gravity Loss	0.425	kg/cm³.G
Equip. Pres. Drop	0.2	kg/cm².G
Control Valves	22.6	kg/cm².G
Others		kg/cm².G
Disch. Press. Req'd	23.82	kg/cm².G
Diff. Pres.	23.20	kg/cm²
Diff. Head (Net)	270	meter
Hydr. Horsepower	19.0	KW
Est. Efficieny		%
Est. BHP		KW
Est. Shut-off Pres.	32.86	kg/cm².G
C.V dp / Friction	7705.54	%

CONTROL VALVES

ITEM NO.	CAL. CV	RTD CV	% OPEN

NOTE : 1. Assumed Data as below.
- Strainer △P = 0.07 kg/cm2
- Flowmeter △P = 0.2 kg/cm2

	CV Input Data	
Item No.		
Des. Cap.		
Density		
D.P		
Char.		

STREAM ID	UNIT	SUCTION 13			DISCHARGE 14	FE-4001	FV-4001	12
Design Case								
Phase		LIQUID			LIQUID			LIQUID
Vapor Fraction								
Normal Flow Rate	kg/hr	25,731			25,731			25,731
Over Design	%	0			0			0
Rated Flow Rate	kg/hr	25,731			25,731			25,731
Temperature	°C	40.0			40.0			40.0
Pressure @Inlet	kg/cm²G	0.50			23.82	23.82	23.62	1.02
Pressure @Destination	kg/cm²G	0.62			23.82	23.62	1.02	0.50
Line Size	inch	8			6			3
Equivalent Length	M	26.0			15.3			28.2
Elevation Change	M	-2.3			0.0			5.0
Fluid, Density	kg/m³	857.7			857.7			857.7
Fluid, Viscosity	cP	0.487			0.487			0.487
Velocity	m/sec	0.26			0.45			1.75
Pres. Drop by Friction	kg/cm²	0.001			0.002	0.000	0.000	0.092
Pres. Drop by Gravity	kg/cm²	-0.193			0.000	0.000	0.000	0.425
Pressure Drop / 100 M	kg/cm²	0.003			0.011			**0.325**
Equipment Pres. Drop	kg/cm²	0.07				0.20		
CV PRESSURE DROP	kg/cm²						22.60	

LINE IDENTIFICATION		1	2	3	4	5	6	7	8	9	10	11	12	13	14	15	16	17
SIMU. STREAM ID																		
SERVICE													PUMP MIN. FLOW					
TYPE OF FLOW	(L/V/2PH)	LIQUID	LIQUID	LIQUID	LIQUID	LIQUID	LIQUID	LIQUID	LIQUID	LIQUID	LIQUID	2PH	LIQUID	LIQUID	LIQUID			
OPERATING CONDITION																		
Temperature	C	40	40	40	85	96	180	195	195	114	114	105	40	40	40			
Pressure @up	Kg/cm2.G											1.31						
Pressure @down	Kg/cm2.G	0.19	-0.01	-0.06	-0.02	-0.09	-0.01	-0.01	-0.01	-2.41	0.00	1.26	-0.52	0.19	0.00			
PIPING INFORMATION																		
Nominal Size	inch	8.0	6.0	6.0	6.0	6.0	6.0	6.0	6.0	6.0	6.0	6.0	3.0	8.0	6.0			
Schedule or Class	-	40	40	40	40	40	40	40	40	40	40	40	40	40	40			
Line length,straight	m	20.0	10.0	118.0	30.0	157.0	15.0	16.0	24.0	110.0	5.0	10.0	20.0	20.0	10.0			
Eqivalent Length Over Design Factor	-	0.25	0.50	0.50	0.50	0.50	0.50	0.5	0.50	0.50	0.50	0.50	0.50	0.25	0.50			
Net Elevation Change	m	(2.3)	0.0	0.0	0.0	0.0	0.0	0.0	0.0	30.1	0.0	0.0	5.0	(2.3)	0.0			
Equivalent Length	m	26.0	15.3	180.9	46.0	240.7	23.0	24.5	36.8	168.6	7.7	15.3	28.2	26.0	15.3			
Pipe inside Dia.	m	0.203	0.154	0.154	0.154	0.154	0.154	0.154	0.154	0.154	0.154	0.154	0.078	0.203	0.154			
Wall Roughness	mm	0.046	0.046	0.046	0.046	0.046	0.046	0.046	0.046	0.046	0.046	0.046	0.046	0.046	0.046			
LIQUID PHASE CALCULATION																		
Flow Rate	Kg/h	44,122	44,122	44,122	44,122	44,122	44,122	44,122	44,122	44,122	44,122	41,993	25,731	25,731	25,731			
Flow Rate Design Margin	%	10	10	10	10	10	10	10	10	10	10	10	0	0	0			
Density @PT	Kg/m3	857.7	859.2	859.2	815.6	804.4	697.0	674.4	673.2	782.9	782.9	791.3	857.7	857.7	857.7			
Viscosity @PT	cP	0.487	0.487	0.487	0.300	0.271	0.140	0.127	0.127	0.231	0.231	0.250	0.487	0.487	0.487			
Surface Tension	dyn/cm											18.5						
Flow Rate, rated	kg/h	48,534	48,534	48,534	48,534	48,534	48,534	48,534	48,534	48,534	48,534	46,192	25,731	25,731	25,731			
Vol. Flow	m3/hr	56.6	56.5	56.5	59.5	60.3	69.6	72.0	72.1	62.0	62.0	58.4	30.0	30.0	30.0			
Velocity	m/s	0.49	0.84	0.84	0.89	0.90	1.04	1.07	1.07	0.92	0.92	0.87	1.75	0.26	0.45			
Reynolds No	-	1.74E+05	2.29E+05	2.29E+05	3.71E+05	4.11E+05	7.96E+05	8.77E+05	8.77E+05	4.82E+05	4.82E+05	4.24E+05	2.40E+05	9.22E+04	1.21E+05			
Friction Factor	-	0.0176	0.0174	0.0174	0.0166	0.0165	0.0158	0.0157	0.0157	0.0163	0.0163	0.0165	0.0190	0.0194	0.0189			
Press. @Out	Kg/cm2.G	0.191	-0.005	-0.064	-0.016	-0.086	-0.009	-0.010	-0.015	-2.413	-0.003	1.305	-0.516	0.192	-0.002			
Pressure Drop by Friction	Kg/cm2	0.0023	0.005	0.064	0.016	0.086	0.009	0.010	0.015	0.061	0.003	0.005	0.092	0.001	0.002			
Pressure Drop by Gravity	Kg/cm2	-0.193	0.000	0.000	0.000	0.000	0.000	0.000	0.000	2.353	0.000		0.425	-0.193	0.000			
Dp / 100 m (by friction)	Kg/cm2	0.0090	0.0352	0.0352	0.0353	0.0355	0.0393	0.0404	0.0405	0.0361	0.0361		0.3253	0.0028	0.0107			
VAPOR PHASE CALCULATION																		
Flow Rate,max op	Kg/h											2,129						
Flow Rate Design Margin	%											10						
Density @PT	Kg/m3											4.69						
or MW	(-)																	
Compr. Z	(-)																	
Viscosity @PT	cP											0.010						
Flow Rate,rated	Kg/h											2,342						
Vol. Flow @in	m3/sec											0.14						
Gas Density @in	Kg/m3											4.69						
Velocity @in	m/s											7.44						
Reynolds No	-											5.38E+05						
Friction Factor	-											0.0162						
Gas Dns @Out	Kg/m3											4.686						
Velocity @Out	m/s											7.449						
Mach no. @Out	-											0.028						
Press. @Out	Kg/cm2.G											1.308						
Pressure Drop by Friction	Kg/cm2											0.002						
Pressure Drop by Gravity	Kg/cm2																	
Dp / 100 m (by friction)	Kg/cm2																	

LINE IDENTIFICATION		1	2	3	4	5	6	7	8	9	10	11	12	13	14	15	16	17
TWO-PHASE CALCULATION METHOD SELECTION																		
TWO-PHASE CALCULATION (HTFS)																		
Vapor Flow rate @ outlet	Kg/hr											2,342						
Upward Angle	deg																	
C factor												14.154						
Liquid + Vapor density	Kg/m3											209.468						
Mach No.												0.153						
Slip Ratio												3.011						
Void Fraction												0.740						
Pressure Drop by Acceleration												0.000						
Pressure Drop by Friction	Kg/cm2											0.053						
Pres. Drop by Gravity	Kg/cm2											0.000						
TWO-PHASE CALCULATION (Homogeneous)																		
Bulk density	Kg/m3											79.11						
Bulk viscosity, centipoise	cP											0.035						
Velocity, m/sec	m/s											8.312						
Reynolds number	-											2.88E+06						
Friction factor	-											0.015						
Pressure Drop by Friction	Kg/cm2											0.042						
Pressure Drop by Gravity	Kg/cm2											0.000						
TWO-PHASE CALCULATION (Dukler)																		
In-place density	Kg/m3											190.93						
Reynolds number	-											1.52E+06						
Friction factor	-											0.015						
Pressure Drop by Friction	Kg/cm2											0.054						
Pressure Drop by Gravity	Kg/cm2											0.000						
Press. @Out	Kg/cm2.G											1.255						
Press. Drop	Kg/cm2											0.055						
FLOW REGIME FOR VERTICAL																		
Simpson	X-Axis(Xd)											0.006						
	Y-Axis(Fr)											0.468						
	Flow Regime											Intermit						
Griffith and Wallies	X-Axis											45.73						
	Y-Axis											0.90						
	Flow Regime											Annular Mist						
Taitel and Dukler	Flow Regime											Annular						
(1) Bubble-Slug	X-Axis											60.56						
Annular trans	Y-Axis											0.12						
(2) Slug-Chum	X-Axis											6.76						
Transition	Y-Axis											0.90						
	2ph Re no.											4.05E+06						
(3) Annular-Churn	X-Axis											1.53						
Slug Trans.	Y-Axis											4.66						
FLOW REGIME FOR HORIZONTAL																		
Taitel and Dukler	X-Axis(Xp)											1.53						
	Y-Axis(Fr)											0.47						
	Y-Axis(Xt)											0.25						
	Y-Axis(Xk)											304.51						
	Flow Regime											Slug						
Baker	X-Axis											100.38						
	Y-Axis											14610						
	Flow Regime											Annular						

30-P-402A/B

LOTTE E&C 롯데건설주식회사	JOB NO.		PREPD BY: J.H.Kim	DATE: Sep. 26 '22	PAGE: 1 / 2	0
	SERVICE	Benzene Column Reflux Pump (PATH1)	CHKD BY: J.H.Myung	APPD BY: J.Y.Kim		

*** Result**

1) Diff. Pressure

Datasheet : 4.76 kg/cm2
Calculation : 4.76 kg/cm2
-> No problem

2) Line Size

Referece
- Suc. : Velocity : 1.2 ~ 2.4 m/s, ΔP/100m : 0.23 kg/cm2
- Disch. : Velocity : 2.4 ~ 3.0 m/s, ΔP/100m : 0.92 kg/cm2

Calculation :
-> No problem

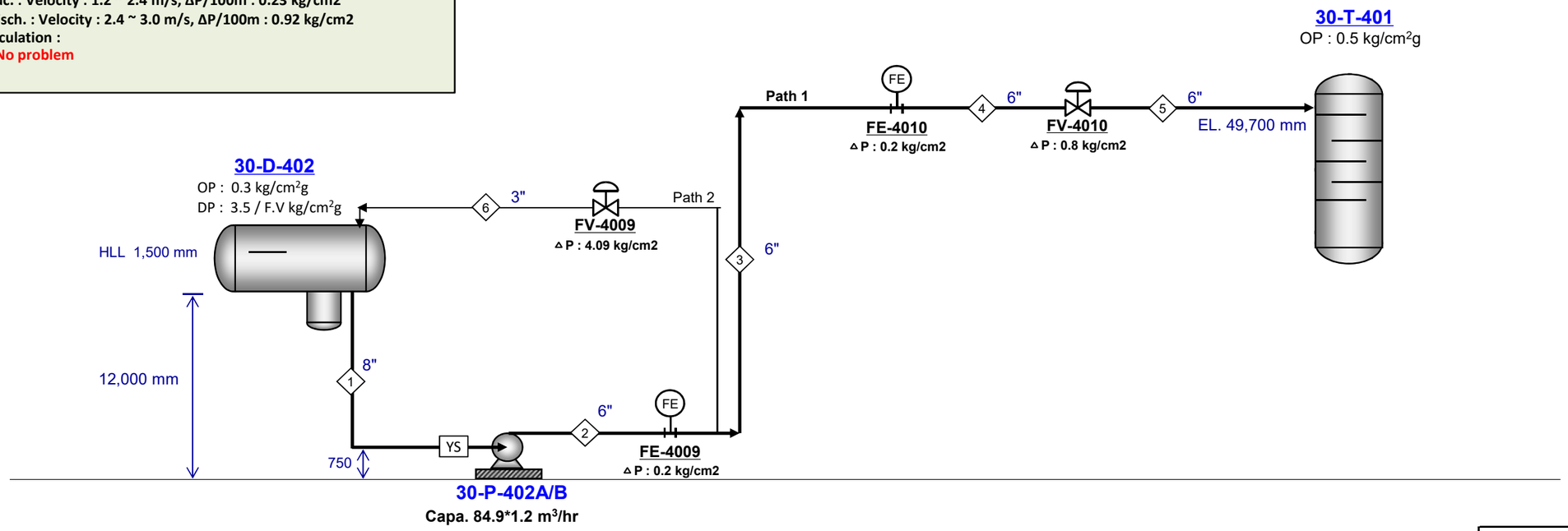

NOTE : 1. Assumed Data as below.
- Strainer △P = 0.07 kg/cm2
- Flowmeter △P = 0.2 kg/cm2

CV Input Data		
Item No.		
Des. Cap.		
Density		
D.P		
Char.		

PUMP CALCULATION

ITEM NUMBER	30-P-402A/B	
SUCTION		
Flow Rate	101.9	m3/hr
Operating Pres.	0.3	kg/cm².G
Design Pres.	3.5	kg/cm².G
Min. Static Head	12.0	meter
Max. Static Head	13.5	meter
Pump Shaft Level	0.75	meter
Vapor Pres.	0.879	kg/cm².A
Allowance	0	meter
Pipe Friction Loss	0.010	kg/cm²
Strainer	0.07	kg/cm²
Others		kg/cm²
Net Suction Pres.	1.16	kg/cm².G
Max. Suction Pres.	4.57	kg/cm².G
NPSH Available	15.72	meter
DISCHARGE		
Operating Pres.	0.5	kg/cm².G
Max. Static Head	49.7	meter
Pipe friction Loss	0.125	kg/cm².G
Pipe Gravity Loss	4.092	kg/cm³.G
Equip. Pres. Drop	0.4	kg/cm².G
Control Valves	0.8	kg/cm².G
Others		kg/cm².G
Disch. Press. Req'd	5.92	kg/cm².G
Diff. Pres.	4.76	kg/cm²
Diff. Head (Net)	57	meter
Hydr. Horsepower	13.2	KW
Est. Efficieny		%
Est. BHP		KW
Est. Shut-off Pres.	10.51	kg/cm².G
C.V dp / Friction	152.36	%

CONTROL VALVES

ITEM NO.	CAL. CV	RTD CV	% OPEN

		SUCTION			DISCHARGE																	
STREAM ID	UNIT	1			2	FE-4009	3	FE-4010	4	FV-4010	5											
Design Case																						
Phase		LIQUID			LIQUID		LIQUID		LIQUID		LIQUID											
Vapor Fraction																						
Normal Flow Rate	kg/hr	70,988			70,988		70,988		70,988		70,988											
Over Design	%	20			20		20		20		20											
Rated Flow Rate	kg/hr	85,186			85,186		85,186		85,186		85,186											
Temperature	°C	65.0			65.0		65.0		65.0		65.0											
Pressure @Inlet	kg/cm²G	0.30			5.92	5.91	5.71	5.69	5.49	5.49	4.69											
Pressure @Destination	kg/cm²G	1.16			5.91	5.71	5.69	5.49	5.49	4.69	0.50											
Line Size	inch	8			6		6		6		6											
Equivalent Length	M	40.6			7.7		15.3		7.7		90.4											
Elevation Change	M	-11.3			0.0		0.0		0.0		49.0											
Fluid, Density	kg/m³	836.0			836.0		836.0		836.0		836.0											
Fluid, Viscosity	cP	0.37			0.37		0.37		0.37		0.37											
Velocity	m/sec	0.88			1.52		1.52		1.52		1.52											
Pres. Drop by Friction	kg/cm²	0.010			0.008	0.000	0.016	0.000	0.008	0.000	0.093											
Pres. Drop by Gravity	kg/cm²	-0.941			0.000	0.000	0.000	0.000	0.000	0.000	4.092											
Pressure Drop / 100 M	kg/cm²	0.026			0.103		0.103		0.103		0.103											
Equipment Pres. Drop	kg/cm²	0.07				0.20		0.20														
CV PRESSURE DROP	kg/cm²									0.8												

LOTTE E&C 롯데건설주식회사	JOB NO.		PREPD BY:	J.H.Kim	DATE:	Sep. 26 '22	PAGE:	2 / 2	0
	SERVICE	Benzene Column Reflux Pump (PATH2)	CHKD BY:	J.H.Myung	APPD BY:	J.Y.Kim			

*** Result**

1) Diff. Pressure

Datasheet : 4.76 kg/cm2
Calculation : 4.76 kg/cm2
-> No problem

2) Line Size

Referece
- Suc. : Velocity : 1.2 ~ 2.4 m/s, ΔP/100m : 0.23 kg/cm2
- Disch. : Velocity : 2.4 ~ 3.0 m/s, ΔP/100m : 0.92 kg/cm2

Calculation :
-> No problem

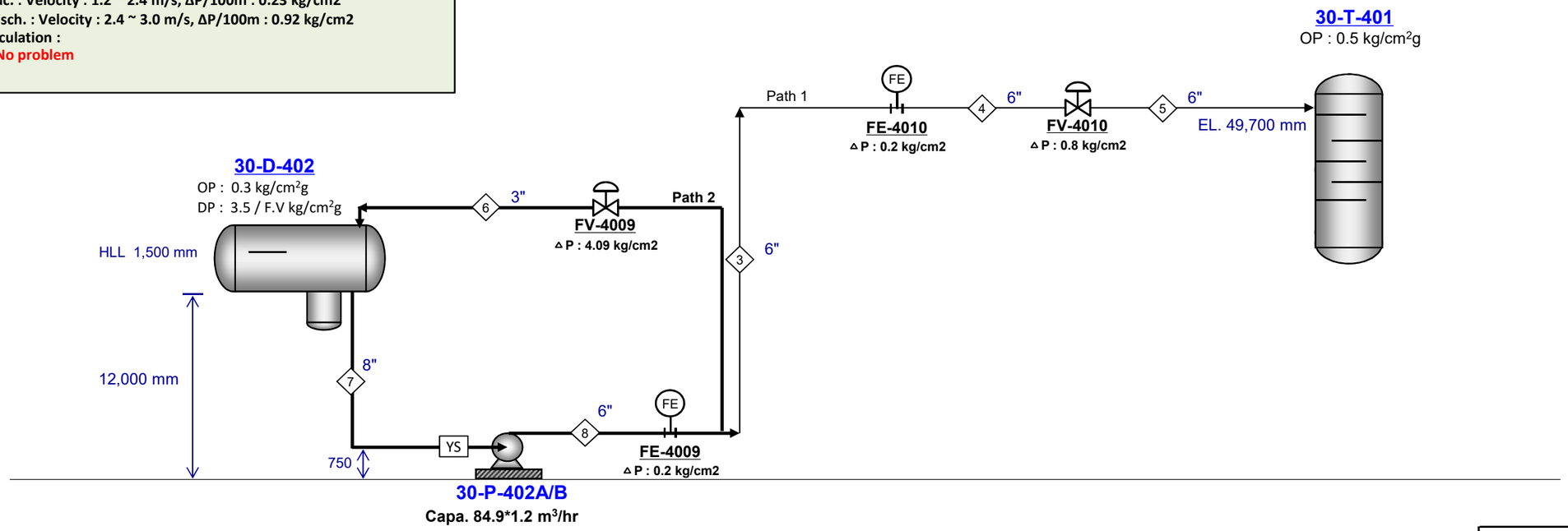

NOTE : 1. Assumed Data as below.
- Strainer △P = 0.07 kg/cm2
- Flowmeter △P = 0.2 kg/cm2

CV Input Data		
Item No.		
Des. Cap.		
Density		
D.P		
Char.		

PUMP CALCULATION

ITEM NUMBER	30-P-402A/B	
SUCTION		
Flow Rate	101.9	m3/hr
Operating Pres.	0.3	kg/cm².G
Design Pres.	3.5	kg/cm².G
Min. Static Head	12.0	meter
Max. Static Head	13.5	meter
Pump Shaft Level	0.75	meter
Vapor Pres.	0.879	kg/cm².A
Allowance	0	meter
Pipe Friction Loss	0.002	kg/cm²
Strainer	0.07	kg/cm²
Others		kg/cm²
Net Suction Pres.	1.17	kg/cm².G
Max. Suction Pres.	4.57	kg/cm².G
NPSH Available	15.82	meter
DISCHARGE		
Operating Pres.	0.3	kg/cm².G
Max. Static Head	14.3	meter
Pipe friction Loss	0.208	kg/cm².G
Pipe Gravity Loss	1.133	kg/cm³.G
Equip. Pres. Drop	0.2	kg/cm².G
Control Valves	4.1	kg/cm².G
Others		kg/cm².G
Disch. Press. Req'd	5.93	kg/cm².G
Diff. Pres.	4.76	kg/cm²
Diff. Head (Net)	57	meter
Hydr. Horsepower	4.8	KW
Est. Efficieny		%
Est. BHP		KW
Est. Shut-off Pres.	10.52	kg/cm².G
C.V dp / Friction	1003.46	%

CONTROL VALVES

ITEM NO.	CAL. CV	RTD CV	% OPEN

		SUCTION			DISCHARGE																	
STREAM ID	UNIT	7			8	FE-4009	FV-4009	6														
Design Case																						
Phase		LIQUID			LIQUID			LIQUID														
Vapor Fraction																						
Normal Flow Rate	kg/hr	30,932			30,932			30,932														
Over Design	%	0			0			0														
Rated Flow Rate	kg/hr	30,932			30,932			30,932														
Temperature	°C	65.0			65.0			65.0														
Pressure @Inlet	kg/cm²G	0.30			5.93	5.93	5.73	1.64														
Pressure @Destination	kg/cm²G	1.17			5.93	5.73	1.64	0.30														
Line Size	inch	8			6			3														
Equivalent Length	M	40.6			7.7			44.1														
Elevation Change	M	-11.3			0.0			13.6														
Fluid, Density	kg/m³	836.0			836.0			836.0														
Fluid, Viscosity	cP	0.37			0.37			0.37														
Velocity	m/sec	0.32			0.55			2.15														
Pres. Drop by Friction	kg/cm²	0.002			0.001	0.000	0.000	0.206														
Pres. Drop by Gravity	kg/cm²	-0.941			0.000	0.000	0.000	1.133														
Pressure Drop / 100 M	kg/cm²	0.004			0.015			0.468														
Equipment Pres. Drop	kg/cm²	0.07				0.20																
CV PRESSURE DROP	kg/cm²						4.09															

LINE IDENTIFICATION		1	2	3	4	5	6	7	8	9	10	11	12	13	14	15	16	17
SIMU. STREAM ID																		
SERVICE							PUMP MIN. FLOW											
TYPE OF FLOW	(L/V/2PH)	LIQUID	LIQUID	LIQUID	LIQUID	LIQUID	LIQUID	LIQUID	LIQUID									
OPERATING CONDITION																		
Temperature	C	65	65	65	65	65	65	65	65									
Pressure @up	Kg/cm2.G	0.30	1.23	1.22	1.21	1.20												
Pressure @down	Kg/cm2.G	1.23	1.22	1.21	1.20	-2.99	-1.34	0.94	0.00									
PIPING INFORMATION																		
Nominal Size	inch	8.0	6.0	6.0	6.0	6.0	3.0	8.0	6.0									
Schedule or Class	-	40	40	40	40	40	40	40	40									
Line length,straight	m	31.3	5.0	10.0	5.0	59.0	31.3	31.3	5.0									
Eqivalent Length Over Design Factor	-	0.25	0.50	0.50	0.50	0.50	0.50	0.25	0.50									
Net Elevation Change	m	(11.3)	0.0	0.0	0.0	49.0	13.6	(11.3)	0.0									
Equivalent Length	m	40.6	7.7	15.3	7.7	90.4	44.1	40.6	7.7									
Pipe inside Dia.	m	0.203	0.154	0.154	0.154	0.154	0.078	0.203	0.154									
Wall Roughness	mm	0.046	0.046	0.046	0.046	0.046	0.046	0.046	0.046									
LIQUID PHASE CALCULATION																		
Flow Rate	Kg/h	70,988	70,988	70,988	70,988	70,988	30,932	30,932	30,932									
Flow Rate Design Margin	%	20	20	20	20	20	0	0	0									
Density @PT	Kg/m3	836.0	836.0	836.0	836.0	836.0	836.0	836.0	836.0									
Viscosity @PT	cP	0.367	0.367	0.367	0.367	0.367	0.367	0.367	0.367									
Surface Tension	dyn/cm																	
Flow Rate, rated	kg/h	85,186	85,186	85,186	85,186	85,186	30,932	30,932	30,932									
Vol. Flow	m3/hr	101.9	101.9	101.9	101.9	101.9	37.0	37.0	37.0									
Velocity	m/s	0.88	1.52	1.52	1.52	1.52	2.15	0.32	0.55									
Reynolds No	-	4.05E+05	5.33E+05	5.33E+05	5.33E+05	5.33E+05	3.83E+05	1.47E+05	1.94E+05									
Friction Factor	-	0.0160	0.0162	0.0162	0.0162	0.0162	0.0184	0.0180	0.0178									
Press. @Out	Kg/cm2.G	1.230	1.222	1.206	1.198	-2.987	-1.339	0.939	-0.001									
Pressure Drop by Friction	Kg/cm2	0.0105	0.008	0.016	0.008	0.093	0.206	0.002	0.001									
Pressure Drop by Gravity	Kg/cm2	-0.941	0.000	0.000	0.000	4.092	1.133	-0.941	0.000									
Dp / 100 m (by friction)	Kg/cm2	0.0258	0.1033	0.1033	0.1033	0.1033	0.4683	0.0038	0.0150									
VAPOR PHASE CALCULATION																		
Flow Rate,max op	Kg/h																	
Flow Rate Design Margin	%																	
Density @PT	Kg/m3																	
or MW	(-)																	
Compr. Z	(-)																	
Viscosity @PT	cP																	
Flow Rate,rated	Kg/h																	
Vol. Flow @in	m3/sec																	
Gas Density @in	Kg/m3																	
Velocity @in	m/s																	
Reynolds No	-																	
Friction Factor	-																	
Gas Dns @Out	Kg/m3																	
Velocity @Out	m/s																	
Mach no. @Out	-																	
Press. @Out	Kg/cm2.G																	
Pressure Drop by Friction	Kg/cm2																	
Pressure Drop by Gravity	Kg/cm2																	
Dp / 100 m (by friction)	Kg/cm2																	

30-P-403A/B

LOTTE E&C 롯데건설주식회사

JOB NO.		PREPD BY:	J.H.Kim	DATE:	Sep. 26 '22
SERVICE	Benzene Column Bottoms Pump (PATH1)	CHKD BY:	J.H.Myung	APPD BY:	J.Y.Kim

PAGE: 1 / 5 (0)

*** Result**

1) Diff. Pressure

Datasheet : 4.82 kg/cm2
Calculation : 4.82 kg/cm2
-> No problem

2) Line Size

Referece
- Suc. : Velocity : 1.2 ~ 2.4 m/s, ΔP/100m : 0.23 kg/cm2
- Disch. : Velocity : 1.8 ~ 2.4 m/s, ΔP/100m : 0.92 kg/cm2

Calculation :
-> No problem

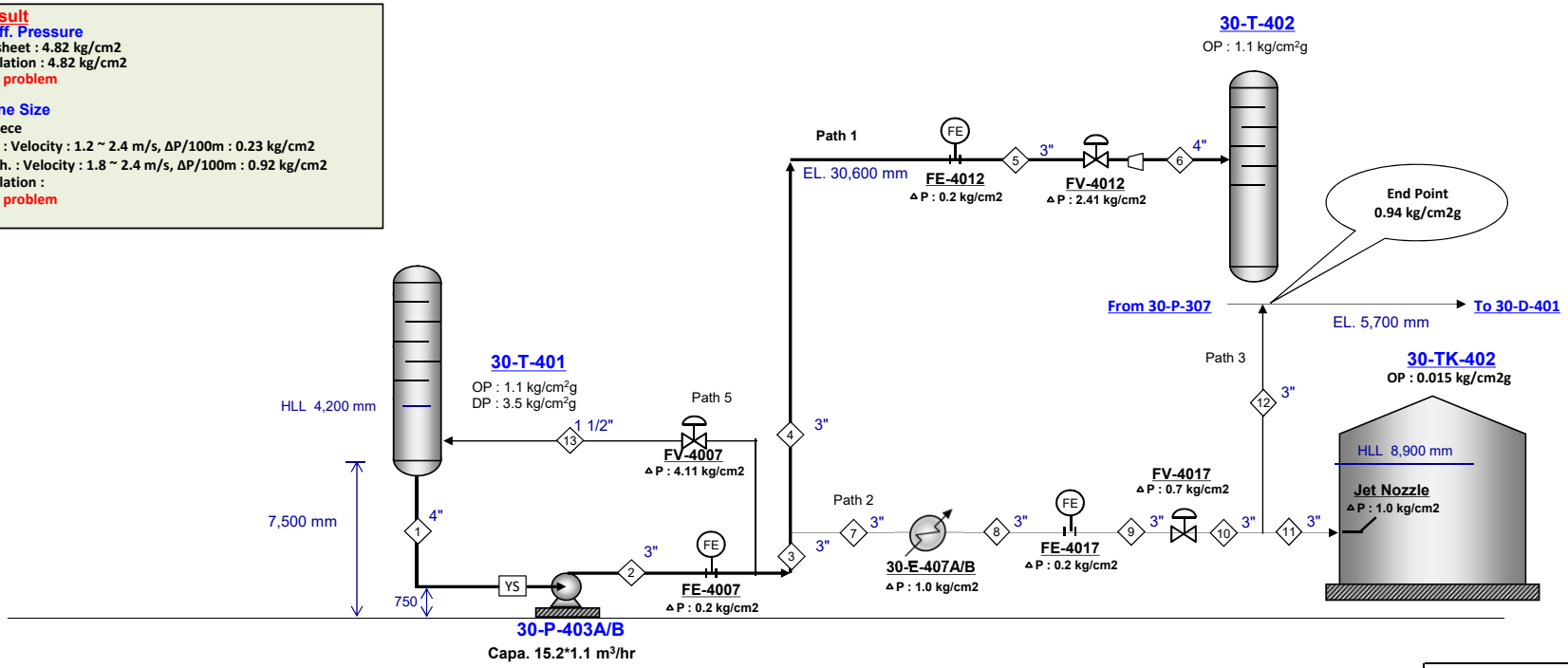

NOTE : 1. Assumed Data as below.
- Strainer △P = 0.07 kg/cm2
- Flowmeter △P = 0.2 kg/cm2

	CV Input Data	
Item No.		
Des. Cap.		
Density		
D.P		
Char.		

PUMP CALCULATION

ITEM NUMBER	30-P-403A/B	
SUCTION		
Flow Rate	16.9	m3/hr
Operating Pres.	1.1	kg/cm².G
Design Pres.	3.5	kg/cm².G
Min. Static Head	7.5	meter
Max. Static Head	11.7	meter
Pump Shaft Level	0.75	meter
Vapor Pres.	2.13	kg/cm².A
Allowance	0	meter
Pipe Friction Loss	0.007	kg/cm²
Strainer	0.07	kg/cm²
Others		kg/cm²
Net Suction Pres.	1.53	kg/cm².G
Max. Suction Pres.	4.32	kg/cm².G
NPSH Available	5.73	meter
DISCHARGE		
Operating Pres.	1.1	kg/cm².G
Max. Static Head	30.6	meter
Pipe friction Loss	0.106	kg/cm².G
Pipe Gravity Loss	2.248	kg/cm³.G
Equip. Pres. Drop	0.4	kg/cm².G
Control Valves	2.4	kg/cm².G
Others	0.09	kg/cm².G
Disch. Press. Req'd	6.35	kg/cm².G
Diff. Pres.	4.82	kg/cm²
Diff. Head (Net)	64	meter
Hydr. Horsepower	2.2	KW
Est. Efficieny		%
Est. BHP		KW
Est. Shut-off Pres.	10.35	kg/cm².G
C.V dp / Friction	404.39	%

CONTROL VALVES

ITEM NO.	CAL. CV	RTD CV	% OPEN

		SUCTION			DISCHARGE																	
STREAM ID	UNIT	1			2	FE-4007	3	4	FE-4012	5	FV-4012	6										
Design Case																						
Phase		LIQUID			LIQUID		LIQUID	LIQUID		LIQUID		2PH										
Vapor Fraction												0.033										
Normal Flow Rate	kg/hr	11,583			11,583		11,446	11,583		11,583		11,446										
Over Design	%	10			10		10	10		10		10										
Rated Flow Rate	kg/hr	12,741			12,741		12,590	12,741		12,741		12,591										
Temperature	°C	139.0			139.2		139.2	139.2		139.2		133.7										
Pressure @Inlet	kg/cm²G	1.10			6.35	6.34	6.14	6.13	3.82	3.62	3.61	1.20										
Pressure @Destination	kg/cm²G	1.53			6.34	6.14	6.13	3.82	3.62	3.61	1.20	1.19										
Line Size	inch	4			3		3	3		3		4										
Equivalent Length	M	30.7			14.1		14.1	70.2		7.0		7.3										
Elevation Change	M	-6.8			0.0		0.0	29.9		0.0		0.0										
Fluid, Density	kg/m³	753.0			753.0		753.0	753.0		753.0		277.0										
Fluid, Viscosity	cP	0.20			0.20		0.20	0.20		0.20												
Velocity	m/sec	0.57			0.99		0.97	0.99		0.99												
Pres. Drop by Friction	kg/cm²	0.007			0.013	0.000	0.012	0.063	0.000	0.006	0.000	0.012										
Pres. Drop by Gravity	kg/cm²	-0.508			0.000	0.000	0.000	2.248	0.000	0.000	0.000	0.000										
Pressure Drop / 100 M	kg/cm²	0.023			0.090		0.088	0.090		0.090		0.161										
Equipment Pres. Drop	kg/cm²	0.07				0.20			0.20													
CV PRESSURE DROP	kg/cm²										2.41											

LOTTE E&C 롯데건설주식회사	JOB NO.		PREPD BY:	J.H.Kim	DATE:	Sep. 26 '22	PAGE:	2 / 5	0
	SERVICE	Benzene Column Bottoms Pump (PATH2)	CHKD BY:	J.H.Myung	APPD BY:	J.Y.Kim			

*** Result**

1) Diff. Pressure

Datasheet : 4.82 kg/cm2
Calculation : 4.82 kg/cm2
-> No problem

2) Line Size

Referece
- Suc. : Velocity : 1.2 ~ 2.4 m/s, ΔP/100m : 0.23 kg/cm2
- Disch. : Velocity : 1.8 ~ 2.4 m/s, ΔP/100m : 0.92 kg/cm2

Calculation :
-> No problem

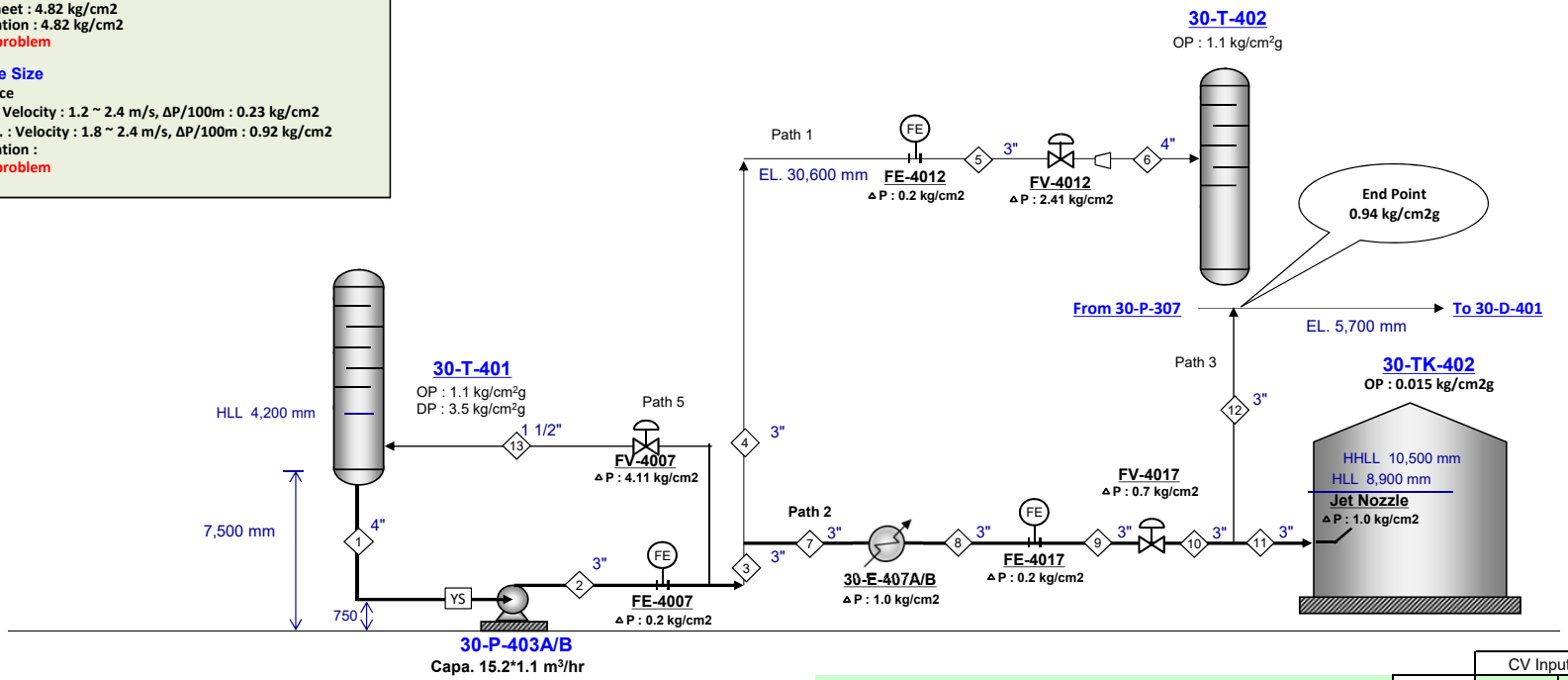

NOTE : 1. Assumed Data as below.
- Strainer △P = 0.07 kg/cm2
- Flowmeter △P = 0.2 kg/cm2

CV Input Data	
Item No.	
Des. Cap.	
Density	
D.P	
Char.	

PUMP CALCULATION

ITEM NUMBER	30-P-403A/B	
SUCTION		
Flow Rate	16.9	m3/hr
Operating Pres.	1.1	kg/cm².G
Design Pres.	3.5	kg/cm².G
Min. Static Head	7.5	meter
Max. Static Head	11.7	meter
Pump Shaft Level	0.75	meter
Vapor Pres.	2.13	kg/cm².A
Allowance	0	meter
Pipe Friction Loss	0.007	kg/cm²
Strainer	0.07	kg/cm²
Others		kg/cm²
Net Suction Pres.	1.53	kg/cm².G
Max. Suction Pres.	4.32	kg/cm².G
NPSH Available	5.73	meter
DISCHARGE		
Operating Pres.	0.015	kg/cm².G
Max. Static Head	11.2	meter
Pipe friction Loss	0.244	kg/cm².G
Pipe Gravity Loss	0.888	kg/cm³.G
Equip. Pres. Drop	2.4	kg/cm².G
Control Valves	2.8	kg/cm².G
Others		kg/cm².G
Disch. Press. Req'd	6.35	kg/cm².G
Diff. Pres.	4.82	kg/cm²
Diff. Head (Net)	64	meter
Hydr. Horsepower	2.2	KW
Est. Efficieny		%
Est. BHP		KW
Est. Shut-off Pres.	10.34	kg/cm².G
C.V dp / Friction	105.90	%

CONTROL VALVES

ITEM NO.	CAL. CV	RTD CV	% OPEN

		SUCTION			DISCHARGE																	
STREAM ID	UNIT	1			2	FE-4007	3	7	E-407A/B	8	FE-4017	9	FV-4017	10	11	Jet Nozzle						
Design Case																						
Phase		LIQUID			LIQUID		LIQUID	LIQUID		LIQUID		LIQUID		LIQUID	LIQUID							
Vapor Fraction																						
Normal Flow Rate	kg/hr	11,583			11,583		11,446	11,446		11,446		11,446		11,446	11,446							
Over Design	%	10			10		10	10		10		10		10	10							
Rated Flow Rate	kg/hr	12,741			12,741		12,590	12,590		12,590		12,590		12,590	12,590							
Temperature	°C	139.0			139.2		139.2	139.2		40.0		40.0		40.0	40.0							
Pressure @Inlet	kg/cm²G	1.10			6.35	6.33	6.13	6.12	6.11	5.11	5.10	4.90	4.90	2.10	2.092	1.02						
Pressure @Destination	kg/cm²G	1.53			6.33	6.13	6.12	6.11	5.11	5.10	4.90	4.90	2.10	2.092	1.015	0.01						
Line Size	inch	4			3		3	3		3		3		3	3							
Equivalent Length	M	30.7			14.1		14.1	14.1		7.0		7.0		7	226							
Elevation Change	M	-6.8			0.0		0.0	0.0		0.0		0.0		0	10							
Fluid, Density	kg/m³	753.0			753.0		753.0	753.0		850.0		850.0		850.0	850.0							
Fluid, Viscosity	cP	0.20			0.20		0.20	0.20		0.47		0.47		0.47	0.47							
Velocity	m/sec	0.57			0.99		0.97	0.97		0.86		0.86		0.86	0.86							
Pres. Drop by Friction	kg/cm²	0.007			0.013	0.000	0.012	0.012	0.000	0.006	0.000	0.006	0.000	0.006	0.189	0.000						
Pres. Drop by Gravity	kg/cm²	-0.508			0.000	0.000	0.000	0.000	0.000	0.000	0.000	0.000	0.000	0.000	0.888	0.000						
Pressure Drop / 100 M	kg/cm²	0.023			0.090		0.088	0.088		0.084		0.084		0.084	0.084							
Equipment Pres. Drop	kg/cm²	0.07				0.20			1.00		0.20					1.00						
CV PRESSURE DROP	kg/cm²												2.8									

LOTTE E&C 롯데건설주식회사	JOB NO.		PREPD BY:	J.H.Kim	DATE:	Sep. 26 '22	PAGE:	3 / 5	0
	SERVICE	Benzene Column Bottoms Pump (PATH3)	CHKD BY:	J.H.Myung	APPD BY:	J.Y.Kim			

*** Result**

1) Diff. Pressure

Datasheet : 4.82 kg/cm2
Calculation : 4.82 kg/cm2
-> No problem

2) Line Size

Referece
- Suc. : Velocity : 1.2 ~ 2.4 m/s, ΔP/100m : 0.23 kg/cm2
- Disch. : Velocity : 1.8 ~ 2.4 m/s, ΔP/100m : 0.92 kg/cm2
Calculation :
-> No problem

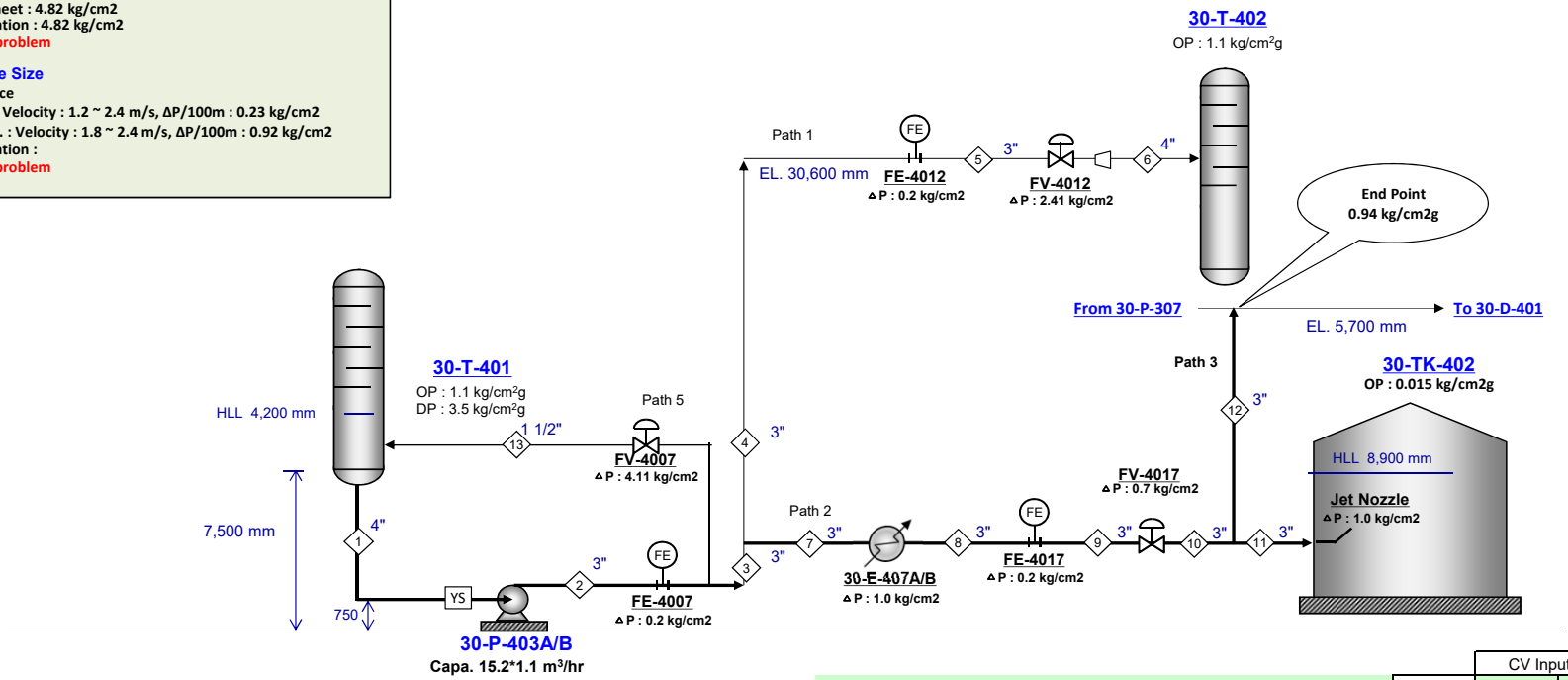

NOTE : 1. Assumed Data as below.
- Strainer △P = 0.07 kg/cm2
- Flowmeter △P = 0.2 kg/cm2

CV Input Data	
Item No.	
Des. Cap.	
Density	
D.P	
Char.	

PUMP CALCULATION

ITEM NUMBER	30-P-403A/B	
SUCTION		
Flow Rate	16.9	m3/hr
Operating Pres.	1.1	kg/cm².G
Design Pres.	3.5	kg/cm².G
Min. Static Head	7.5	meter
Max. Static Head	11.7	meter
Pump Shaft Level	0.75	meter
Vapor Pres.	2.13	kg/cm².A
Allowance	0	meter
Pipe Friction Loss	0.007	kg/cm²
Strainer	0.07	kg/cm²
Others		kg/cm²
Net Suction Pres.	1.53	kg/cm².G
Max. Suction Pres.	4.32	kg/cm².G
NPSH Available	5.73	meter
DISCHARGE		
Operating Pres.	0.94	kg/cm².G
Max. Static Head	8.9	meter
Pipe friction Loss	0.180	kg/cm².G
Pipe Gravity Loss	0.693	kg/cm³.G
Equip. Pres. Drop	1.4	kg/cm².G
Control Valves	3.1	kg/cm².G
Others		kg/cm².G
Disch. Press. Req'd	6.35	kg/cm².G
Diff. Pres.	4.82	kg/cm²
Diff. Head (Net)	64	meter
Hydr. Horsepower	2.2	KW
Est. Efficieny		%
Est. BHP		KW
Est. Shut-off Pres.	10.35	kg/cm².G
C.V dp / Friction	198.75	%

CONTROL VALVES

ITEM NO.	CAL. CV	RTD CV	% OPEN

		SUCTION			DISCHARGE										
STREAM ID	UNIT	1			2	FE-4007	3	7	E-407A/B	8	FE-4017	9	FV-4017	10	12
Design Case															
Phase		LIQUID			LIQUID		LIQUID	LIQUID		LIQUID		LIQUID		LIQUID	LIQUID
Vapor Fraction															
Normal Flow Rate	kg/hr	11,583			11,583		11,446	11,446		11,446		11,446		11,446	11,446
Over Design	%	10			10		10	10		10		10		10	10
Rated Flow Rate	kg/hr	12,741			12,741		12,590	12,590		12,590		12,590		12,590	12,590
Temperature	°C	139.0			139.2		139.2	139.2		40.0		40.0		40.0	40.0
Pressure @Inlet	kg/cm²G	1.10			6.35	6.34	6.14	6.13	6.12	5.12	5.11	4.91	4.90	1.76	1.758
Pressure @Destination	kg/cm²G	1.53			6.34	6.14	6.13	6.12	5.12	5.11	4.91	4.90	1.76	1.758	0.940
Line Size	inch	4			3		3	3		3		3		3	3
Equivalent Length	M	30.7			14.1		14.1	14.1		7.0		7.0		7	149
Elevation Change	M	-6.8			0.0		0.0	0.0		0.0		0.0		0	8
Fluid, Density	kg/m³	753.0			753.0		753.0	753.0		850.0		850.0		850.0	850.0
Fluid, Viscosity	cP	0.20			0.20		0.20	0.20		0.47		0.47		0.47	0.47
Velocity	m/sec	0.57			0.99		0.97	0.97		0.86		0.86		0.86	0.86
Pres. Drop by Friction	kg/cm²	0.007			0.013	0.000	0.012	0.012	0.000	0.006	0.000	0.006	0.000	0.006	0.125
Pres. Drop by Gravity	kg/cm²	-0.508			0.000	0.000	0.000	0.000	0.000	0.000	0.000	0.000	0.000	0.000	0.693
Pressure Drop / 100 M	kg/cm²	0.023			0.090		0.088	0.088		0.084		0.084		0.084	0.084
Equipment Pres. Drop	kg/cm²	0.07				0.20			1.00		0.20				
CV PRESSURE DROP	kg/cm²												3.14		

LOTTE E&C 롯데건설주식회사	JOB NO.		PREPD BY:	J.H.Kim	DATE:	Sep. 26 '22	PAGE:	4 / 5	0
	SERVICE	Benzene Column Bottoms Pump (PATH4)	CHKD BY:	J.H.Myung	APPD BY:	J.Y.Kim			

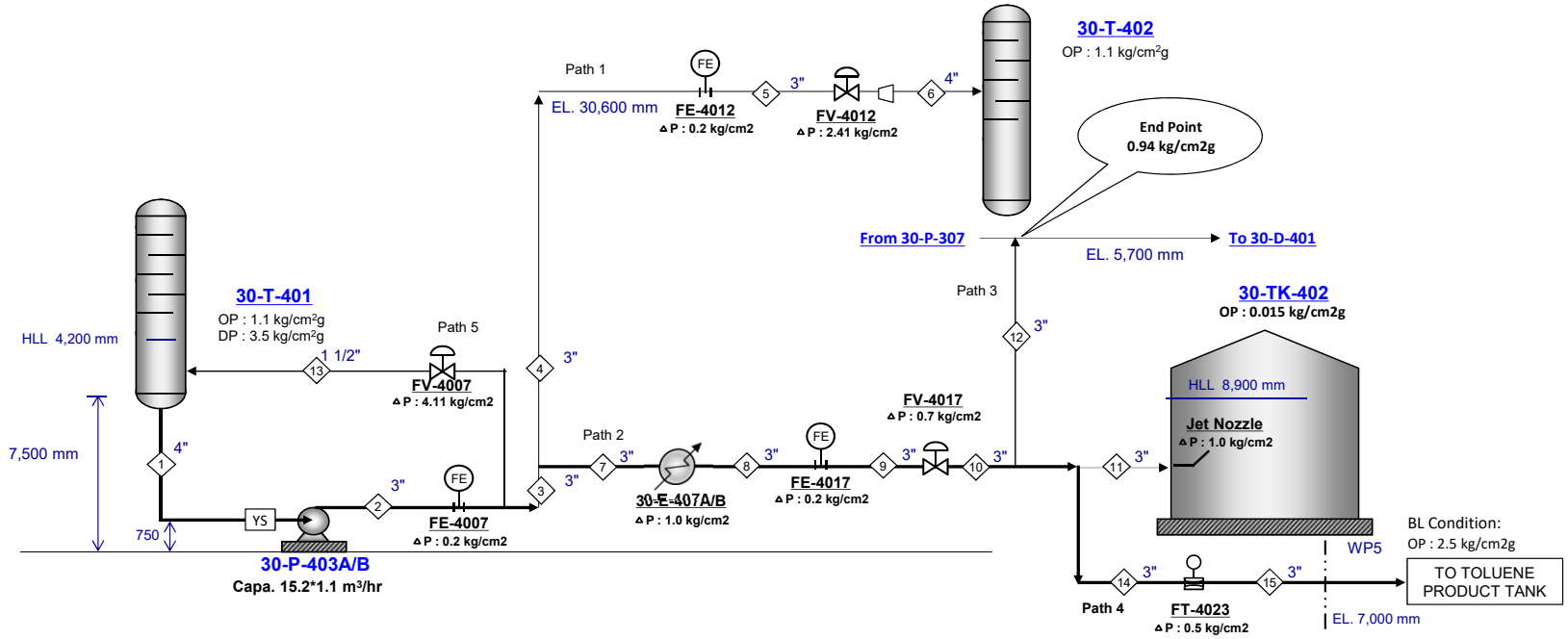

NOTE : 1. Assumed Data as below.
- Strainer △P = 0.07 kg/cm2
- Flowmeter △P = 0.2 kg/cm2

CV Input Data		
Item No.		
Des. Cap.		
Density		
D.P		
Char.		

PUMP CALCULATION

ITEM NUMBER	30-P-403A/B	
SUCTION		
Flow Rate	16.9	m3/hr
Operating Pres.	1.1	kg/cm².G
Design Pres.	3.5	kg/cm².G
Min. Static Head	7.5	meter
Max. Static Head	11.7	meter
Pump Shaft Level	0.75	meter
Vapor Pres.	2.13	kg/cm².A
Allowance	0	meter
Pipe Friction Loss	0.007	kg/cm²
Strainer	0.07	kg/cm²
Others		kg/cm²
Net Suction Pres.	1.53	kg/cm².G
Max. Suction Pres.	4.32	kg/cm².G
NPSH Available	5.73	meter
DISCHARGE	WP5	
Operating Pres.	2.5	kg/cm².G
Max. Static Head	7.75	meter
Pipe friction Loss	0.658	kg/cm².G
Pipe Gravity Loss	0.595	kg/cm³.G
Equip. Pres. Drop	1.9	kg/cm².G
Control Valves	0.7	kg/cm².G
Others		kg/cm².G
Disch. Press. Req'd	6.35	kg/cm².G
Diff. Pres.	4.82	kg/cm²
Diff. Head (Net)	64	meter
Hydr. Horsepower	2.2	KW
Est. Efficieny		%
Est. BHP		KW
Est. Shut-off Pres.	10.35	kg/cm².G
C.V dp / Friction	27.36	%

CONTROL VALVES

ITEM NO.	CAL. CV	RTD CV	% OPEN

		SUCTION			DISCHARGE																	
STREAM ID	UNIT	1			2	FE-4007	3	7	E-407A/B	8	FE-4017	9	FV-4017	10	14	FT-4023	15					
Design Case																						
Phase		LIQUID			LIQUID		LIQUID	LIQUID		LIQUID		LIQUID		LIQUID	LIQUID		LIQUID					
Vapor Fraction																						
Normal Flow Rate	kg/hr	11,583			11,583		11,446	11,446		11,446		11,446		11,446	11,446		11,446					
Over Design	%	10			10		10	10		10		10		10	10		10					
Rated Flow Rate	kg/hr	12,741			12,741		12,590	12,590		12,590		12,590		12,590	12,590		12,590					
Temperature	°C	139.0			139.2		139.2	139.2		40.0		40.0		40.0	40.0		40.0					
Pressure @Inlet	kg/cm²G	1.10			6.35	6.34	6.14	6.13	6.12	5.12	5.11	4.91	4.90	4.20	4.198	4.19	3.69					
Pressure @Destination	kg/cm²G	1.53			6.34	6.14	6.13	6.12	5.12	5.11	4.91	4.90	4.20	4.198	4.187	3.69	2.50					
Line Size	inch	4			3		3	3		3		3		3	3		3					
Equivalent Length	M	30.7			14.1		14.1	14.1		7.0		7.0		7	14		707					
Elevation Change	M	-6.8			0.0		0.0	0.0		0.0		0.0		0	0		7					
Fluid, Density	kg/m³	753.0			753.0		753.0	753.0		850.0		850.0		850.0	850.0		850.0					
Fluid, Viscosity	cP	0.20			0.20		0.20	0.20		0.47		0.47		0.47	0.47		0.47					
Velocity	m/sec	0.57			0.99		0.97	0.97		0.86		0.86		0.86	0.86		0.86					
Pres. Drop by Friction	kg/cm²	0.007			0.013	0.000	0.012	0.012	0.000	0.006	0.000	0.006	0.000	0.006	0.012	0.000	0.592					
Pres. Drop by Gravity	kg/cm²	-0.508			0.000	0.000	0.000	0.000	0.000	0.000	0.000	0.000	0.000	0.000	0.000	0.000	0.595					
Pressure Drop / 100 M	kg/cm²	0.023			0.090		0.088	0.088		0.084		0.084		0.084	0.084		0.084					
Equipment Pres. Drop	kg/cm²	0.07				0.20			1.00		0.20					0.50						
CV PRESSURE DROP	kg/cm²												0.7									

LOTTE E&C 롯데건설주식회사	JOB NO.		PREPD BY:	J.H.Kim	DATE:	Sep. 26 '22	PAGE:	5 / 5	0
	SERVICE	Benzene Column Bottoms Pump (PATH5)	CHKD BY:	J.H.Myung	APPD BY:	J.Y.Kim			

*** Result**

1) Diff. Pressure

Datasheet : 4.82 kg/cm2
Calculation : 4.81 kg/cm2
-> No problem

2) Line Size

Referece
- Suc. : Velocity : 1.2 ~ 2.4 m/s, ΔP/100m : 0.23 kg/cm2
- Disch. : Velocity : 1.8 ~ 2.4 m/s, ΔP/100m : 0.92 kg/cm2

Calculation :
-> No problem

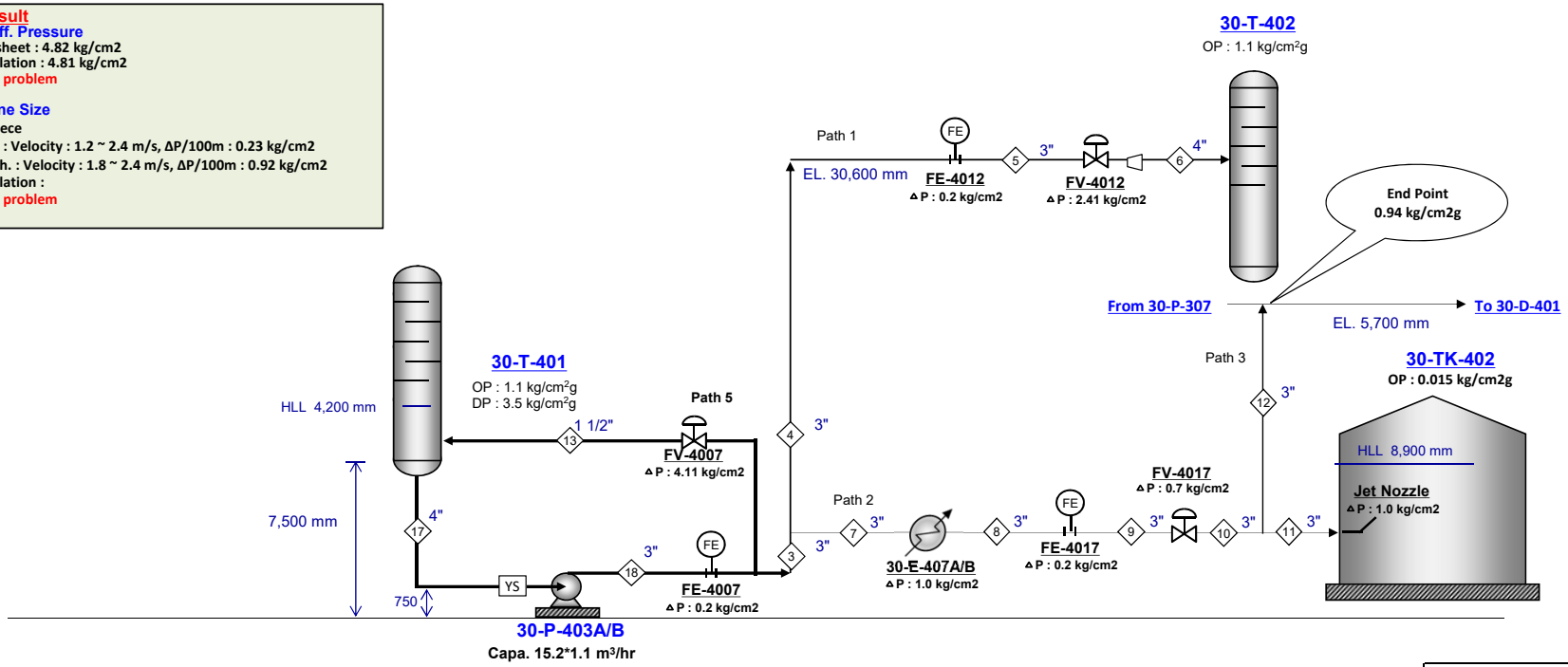

NOTE : 1. Assumed Data as below.
- Strainer △P = 0.07 kg/cm2
- Flowmeter △P = 0.2 kg/cm2

CV Input Data		
Item No.		
Des. Cap.		
Density		
D.P		
Char.		

PUMP CALCULATION

ITEM NUMBER	30-P-403A/B	
SUCTION		
Flow Rate	16.9	m3/hr
Operating Pres.	1.1	kg/cm².G
Design Pres.	3.5	kg/cm².G
Min. Static Head	7.5	meter
Max. Static Head	11.7	meter
Pump Shaft Level	0.75	meter
Vapor Pres.	2.13	kg/cm².A
Allowance	0	meter
Pipe Friction Loss	0.001	kg/cm²
Strainer	0.07	kg/cm²
Others		kg/cm²
Net Suction Pres.	1.54	kg/cm².G
Max. Suction Pres.	4.32	kg/cm².G
NPSH Available	5.81	meter
DISCHARGE		
Operating Pres.	1.1	kg/cm².G
Max. Static Head	11.7	meter
Pipe friction Loss	0.110	kg/cm².G
Pipe Gravity Loss	0.825	kg/cm³.G
Equip. Pres. Drop	0.2	kg/cm².G
Control Valves	4.1	kg/cm².G
Others		kg/cm².G
Disch. Press. Req'd	6.34	kg/cm².G
Diff. Pres.	4.81	kg/cm²
Diff. Head (Net)	64	meter
Hydr. Horsepower	0.7	KW
Est. Efficieny		%
Est. BHP		KW
Est. Shut-off Pres.	10.33	kg/cm².G
C.V dp / Friction	1327.08	%

CONTROL VALVES

ITEM NO.	CAL. CV	RTD CV	% OPEN

		SUCTION			DISCHARGE																	
STREAM ID	UNIT	17			18	FE-4007	FV-4007	13														
Design Case																						
Phase		LIQUID			LIQUID			LIQUID														
Vapor Fraction																						
Normal Flow Rate	kg/hr	3,765			3,765			3,765														
Over Design	%	0			0			0														
Rated Flow Rate	kg/hr	3,765			3,765			3,765														
Temperature	°C	139.0			139.0			139.0														
Pressure @Inlet	kg/cm²G	1.10			6.34	6.34	6.14	2.03														
Pressure @Destination	kg/cm²G	1.54			6.34	6.14	2.03	1.10														
Line Size	inch	4			3			1.5														
Equivalent Length	M	30.7			14.1			33.0														
Elevation Change	M	-6.8			0.0			11.0														
Fluid, Density	kg/m³	753.0			753.0			753.0														
Fluid, Viscosity	cP	0.20			0.20			0.20														
Velocity	m/sec	0.17			0.29			1.22														
Pres. Drop by Friction	kg/cm²	0.001			0.001	0.000	0.000	0.108														
Pres. Drop by Gravity	kg/cm²	-0.508			0.000	0.000	0.000	0.825														
Pressure Drop / 100 M	kg/cm²	0.002			0.009			0.329														
Equipment Pres. Drop	kg/cm²	0.07				0.20																
CV PRESSURE DROP	kg/cm²						4.11															

LINE IDENTIFICATION		1	2	3	4	5	6	7	8	9	10	11	12	13	14	15	16	17	18
SIMU. STREAM ID					Path 1			Path 2					Path 3		Path 4				
SERVICE														PUMP MIN. FLOW					
TYPE OF FLOW	(L/V/2PH)	LIQUID	LIQUID	LIQUID	LIQUID	LIQUID	2PH	LIQUID	LIQUID	LIQUID	LIQUID	LIQUID	LIQUID	LIQUID	LIQUID	LIQUID	LIQUID	LIQUID	LIQUID
OPERATING CONDITION																			
Temperature	C	139	139	139	139	139	134	139	40	40	40	40	40	139	40	40		139	139
Pressure @up	Kg/cm2.G	1.10																	
Pressure @down	Kg/cm2.G	1.60	-0.01	-0.01	-2.31	-0.01	-0.01	-0.01	-0.01	-0.01	-0.01	-1.08	-0.82	-0.93	-0.01	-1.19	#VALUE!	0.51	0.00
PIPING INFORMATION																			
Nominal Size	inch	4.0	3.0	3.0	3.0	3.0	4.0	3.0	3.0	3.0	3.0	3.0	3.0	1.5	3.0	3.0		4.0	3.0
Schedule or Class	-	40	40	40	40	40	40	40	40	40	40	40	40	80	40	40		40	40
Line length,straight	m	25.0	10.0	10.0	49.9	5.0	5.0	10.0	5.0	5.0	5.0	160.5	106.0	25.0	10.0	698.1		25.0	10.0
Eqivalent Length Over Design Factor	-	0.25	0.50	0.50	0.50	0.50	0.50	0.50	0.50	0.50	0.50	0.50	0.50	0.50	0.50	Fitting		0.25	0.50
Net Elevation Change	m	(6.8)	0.0	0.0	29.9	0.0	0.0	0.0	0.0	0.0	0.0	10.5	8.2	11.0	0.0	7.0		(6.8)	0.0
Equivalent Length	m	30.7	14.1	14.1	70.2	7.0	7.3	14.1	7.0	7.0	7.0	226.0	149.3	33.0	14.1	707.2		30.7	14.1
Pipe inside Dia.	m	0.102	0.078	0.078	0.078	0.078	0.102	0.078	0.078	0.078	0.078	0.078	0.078	0.038	0.078	0.078		0.102	0.078
Wall Roughness	mm	0.046	0.046	0.046	0.046	0.046	0.046	0.046	0.046	0.046	0.046	0.046	0.046	0.046	0.046	0.046		0.046	0.046
LIQUID PHASE CALCULATION																			
Flow Rate	Kg/h	11,583	11,583	11,446	11,583	11,583	11,063	11,446	11,446	11,446	11,446	11,446	11,446	3,765	11,446	11,446		3,765	3,765
Flow Rate Design Margin	%	10	10	10	10	10	10	10	10	10	10	10	10	0	10	10		0	0
Density @PT	Kg/m3	753.0	753.0	753.0	753.0	753.0	758.7	753.0	850.0	850.0	850.0	850.0	850.0	753.0	850.0	850.0		753.0	753.0
Viscosity @PT	cP	0.200	0.200	0.200	0.200	0.200	0.208	0.200	0.468	0.468	0.468	0.468	0.468	0.200	0.468	0.468		0.200	0.200
Surface Tension	dyn/cm						15.9												
Flow Rate, rated	kg/h	12,741	12,741	12,590	12,741	12,741	12,169	12,590	12,590	12,590	12,590	12,590	12,590	3,765	12,590	12,590		3,765	3,765
Vol. Flow	m3/hr	16.9	16.9	16.7	16.9	16.9	16.0	16.7	14.8	14.8	14.8	14.8	14.8	5.0	14.8	14.8	#DIV/0!	5.0	5.0
Velocity	m/s	0.57	0.99	0.97	0.99	0.99	0.54	0.97	0.86	0.86	0.86	0.86	0.86	1.22	0.86	0.86	#DIV/0!	0.17	0.29
Reynolds No	-	2.20E+05	2.89E+05	2.86E+05	2.89E+05	2.89E+05	2.02E+05	2.86E+05	1.22E+05	1.22E+05	1.22E+05	1.22E+05	1.22E+05	1.75E+05	1.22E+05	1.22E+05	#VALUE!	6.51E+04	8.54E+04
Friction Factor	-	0.0184	0.0187	0.0188	0.0187	0.0187	0.0185	0.0188	0.0202	0.0202	0.0202	0.0202	0.0202	0.0220	0.0202	0.0202	#VALUE!	0.0214	0.0211
Press. @Out	Kg/cm2.G	1.601	-0.013	-0.012	-2.311	-0.006	-0.002	-0.012	-0.006	-0.006	-0.006	-1.077	-0.818	-0.933	-0.012	-1.187	#VALUE!	0.508	-0.001
Pressure Drop by Friction	Kg/cm2	0.0069	0.013	0.012	0.063	0.006	0.002	0.012	0.006	0.006	0.006	0.189	0.125	0.108	0.012	0.592	#VALUE!	0.001	0.001
Pressure Drop by Gravity	Kg/cm2	-0.508	0.000	0.000	2.248	0.000		0.000	0.000	0.000	0.000	0.888	0.693	0.825	0.000	0.595	0.000	-0.508	0.000
Dp / 100 m (by friction)	Kg/cm2	0.0226	0.0897	0.0876	0.0897	0.0897		0.0876	0.0836	0.0836	0.0836	0.0836	0.0836	0.3285	0.0836	0.0836	#VALUE!	0.0023	0.0088
VAPOR PHASE CALCULATION																			
Flow Rate,max op	Kg/h						383												
Flow Rate Design Margin	%						10												
Density @PT	Kg/m3						5.30												
or MW	(-)																		
Compr. Z	(-)						0.95												
Viscosity @PT	cP						0.009												
Flow Rate,rated	Kg/h						422												
Vol. Flow @in	m3/sec						0.02												
Gas Density @in	Kg/m3						5.30												
Velocity @in	m/s						2.69												
Reynolds No	-						1.62E+05												
Friction Factor	-						0.0190												
Gas Dns @Out	Kg/m3						5.299												
Velocity @Out	m/s						2.691												
Mach no. @Out	-						0.016												
Press. @Out	Kg/cm2.G						0.000												
Pressure Drop by Friction	Kg/cm2						0.000												
Pressure Drop by Gravity	Kg/cm2																		
Dp / 100 m (by friction)	Kg/cm2																		

LINE IDENTIFICATION		1	2	3	4	5	6	7	8	9	10	11	12	13	14	15	16	17	18
TWO-PHASE CALCULATION METHOD SELECTION																			
TWO-PHASE CALCULATION (HTFS)																			
Vapor Flow rate @ outlet	Kg/hr						422												
Upward Angle	deg																		
C factor							15.791												
Liquid + Vapor density	Kg/m3						277.006												
Mach No.							0.106												
Slip Ratio							2.797												
Void Fraction							0.639												
Pressure Drop by Acceleration							0.000												
Pressure Drop by Friction	Kg/cm2						0.012												
Pres. Drop by Gravity	Kg/cm2						0.000												
TWO-PHASE CALCULATION (Homogeneous)																			
Bulk density	Kg/m3						119.76												
Bulk viscosity, centipoise	cP						0.042												
Velocity, m/sec	m/s						3.232												
Reynolds number	-						9.34E+05												
Friction factor	-						0.017												
Pressure Drop by Friction	Kg/cm2						0.008												
Pressure Drop by Gravity	Kg/cm2						0.000												
TWO-PHASE CALCULATION (Dukler)																			
In-place density	Kg/m3						245.13												
Reynolds number	-						5.66E+05												
Friction factor	-						0.017												
Pressure Drop by Friction	Kg/cm2						0.011												
Pressure Drop by Gravity	Kg/cm2						0.000												
Press. @Out	Kg/cm2.G						-0.012												
Press. Drop	Kg/cm2						0.012												
FLOW REGIME FOR VERTICAL																			
Simpson	X-Axis(Xd)						0.005												
	Y-Axis(Fr)						0.225												
	Flow Regime						Intermit												
Griffith and Wallies	X-Axis						10.42												
	Y-Axis						0.83												
	Flow Regime						Slug												
Taitel and Dukler	Flow Regime						Slug												
(1) Bubble-Slug	X-Axis						22.51												
Annular trans	Y-Axis						0.20												
(2) Slug-Chum	X-Axis						3.23												
Transition	Y-Axis						0.83												
	2ph Re no.						1.21E+06												
(3) Annular-Churn	X-Axis						2.38												
Slug Trans.	Y-Axis						1.88												
FLOW REGIME FOR HORIZONTAL																			
Taitel and Dukler	X-Axis(Xp)						2.38												
	Y-Axis(Fr)						0.23												
	Y-Axis(Xt)						0.14												
	Y-Axis(Xk)						101.35												
	Flow Regime						Slug												
Baker	X-Axis						172.34												
	Y-Axis						5733												
	Flow Regime						Slug												

30-P-404A/B

LOTTE E&C 롯데건설주식회사

JOB NO.		PREPD BY:	J.H.Kim	DATE:	Sep. 26 '22	PAGE:	1 / 4	0
SERVICE	Toluene Column Reflux Pump (Path 1)	CHKD BY:	J.H.Myung	APPD BY:	J.Y.Kim			

*** Result**

1) Diff. Pressure

PATH 1

Datasheet : 6.05 kg/cm2
PATH1 Calculation : 6.02 kg/cm2
-> No problem

2) Line Size

Referece
- Suc. : Velocity : 1.2 ~ 2.4 m/s, ΔP/100m : 0.23 kg/cm2
- Disch. : Velocity : 1.8 ~ 2.4 m/s, ΔP/100m : 0.92 kg/cm2

PATH1 Calculation :
-> No problem

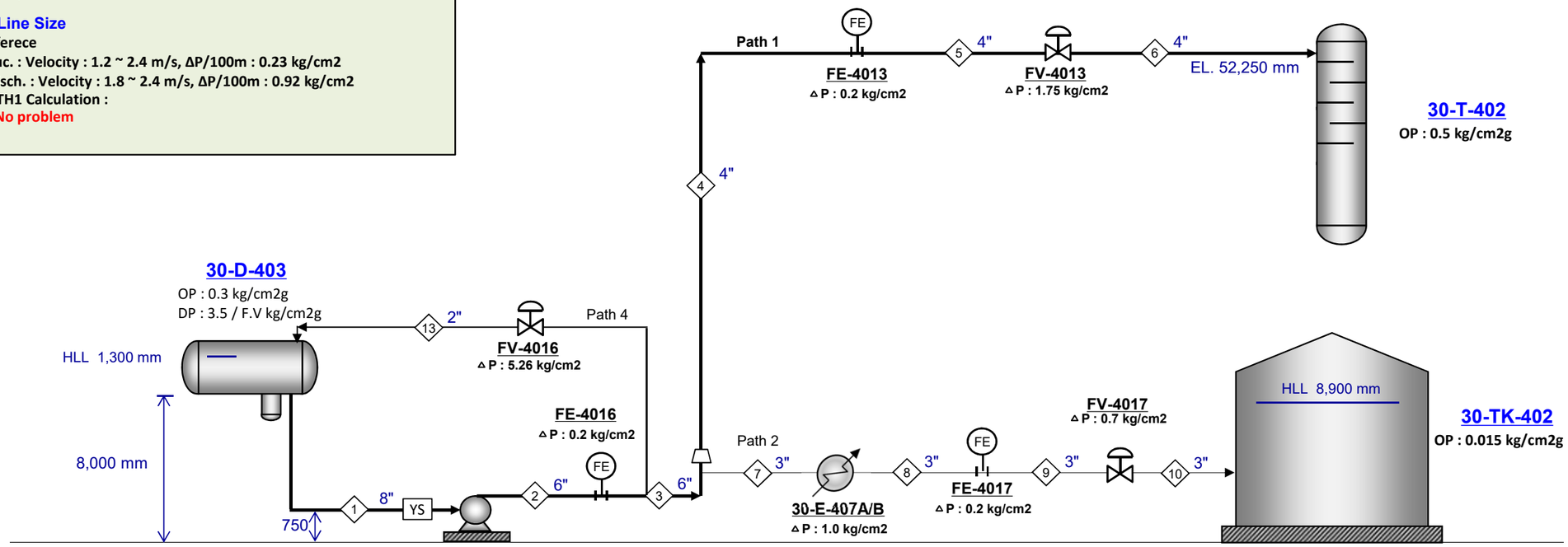

NOTE : 1. Assumed Data as below.
- Strainer △P = 0.07 kg/cm2
- Flowmeter △P = 0.2 kg/cm2

CV Input Data		
Item No.		
Des. Cap.		
Density		
D.P		
Char.		

PUMP CALCULATION

ITEM NUMBER	30-P-404A/B	
SUCTION		
Flow Rate	54.6	m3/hr
Operating Pres.	0.3	kg/cm².G
Design Pres.	3.5	kg/cm².G
Min. Static Head	8	meter
Max. Static Head	9.3	meter
Pump Shaft Level	0.75	meter
Vapor Pres.	1.009	kg/cm².A
Allowance	0	meter
Pipe Friction Loss	0.002	kg/cm²
Strainer	0.07	kg/cm²
Others		kg/cm²
Net Suction Pres.	0.80	kg/cm².G
Max. Suction Pres.	4.17	kg/cm².G
NPSH Available	10.46	meter
DISCHARGE		
Operating Pres.	0.5	kg/cm².G
Max. Static Head	52.3	meter
Pipe friction Loss	0.123	kg/cm².G
Pipe Gravity Loss	4.038	kg/cm³.G
Equip. Pres. Drop	0.4	kg/cm².G
Control Valves	1.8	kg/cm².G
Others		kg/cm².G
Disch. Press. Req'd	6.81	kg/cm².G
Diff. Pres.	6.02	kg/cm²
Diff. Head (Net)	76.7	meter
Hydr. Horsepower	8.9	KW
Est. Efficieny		%
Est. BHP		KW
Est. Shut-off Pres.	11.69	kg/cm².G
C.V dp / Friction	334.37	%

CONTROL VALVES

ITEM NO.	CAL. CV	RTD CV	% OPEN

		SUCTION			DISCHARGE																	
STREAM ID	UNIT	1			2	FE-4016	3	4	FE-4013	5	FV-4013	6										
Design Case																						
Phase		LIQUID			LIQUID		LIQUID	LIQUID		LIQUID		LIQUID										
Vapor Fraction																						
Normal Flow Rate	kg/hr	35,672			35,672		35,672	24,728		24,728		24,728										
Over Design	%	20			20		20	20		20		20										
Rated Flow Rate	kg/hr	42,806			42,806		42,806	29,674		29,674		29,674										
Temperature	°C	110.0			110.0		110.0	110.0		110.0		110.0										
Pressure @Inlet	kg/cm²G	0.30			6.81	6.81	6.61	6.60	6.60	6.40	6.39	4.64										
Pressure @Destination	kg/cm²G	0.76			6.81	6.61	6.60	6.60	6.40	6.39	4.64	0.50										
Line Size	inch	8			6		6	4		4		4										
Equivalent Length	M	34.8			15.3		7.7	7.3		7.3		89.5										
Elevation Change	M	-6.8			0.0		0.0	0.0		0.0		51.5										
Fluid, Density	kg/m³	784.0			784.0		784.0	784.0		784.0		784.0										
Fluid, Viscosity	cP	0.25			0.25		0.25	0.25		0.25		0.25										
Velocity	m/sec	0.47			0.81		0.81	1.28		1.28		1.28										
Pres. Drop by Friction	kg/cm²	0.002			0.004	0.000	0.002	0.008	0.000	0.008	0.000	0.100										
Pres. Drop by Gravity	kg/cm²	-0.529			0.000	0.000	0.000	0.000	0.000	0.000	0.000	4.038										
Pressure Drop / 100 M	kg/cm²	0.007			0.028		0.028	0.112		0.112		0.112										
Equipment Pres. Drop	kg/cm²	0.07				0.20			0.20													
CV PRESSURE DROP	kg/cm²										1.75											

LOTTE E&C 롯데건설주식회사	JOB NO.		PREPD BY: J.H.Kim	DATE: Sep. 26 '22	PAGE: 2 / 4	0
	SERVICE	Toluene Column Reflux Pump (Path 2)	CHKD BY: J.H.Myung	APPD BY: J.Y.Kim		

*** Result**

1) Diff. Pressure

PATH 2

Datasheet : 6.05 kg/cm2
PATH2 Calculation : 6.05 kg/cm2
-> No problem

2) Line Size

Referece
- Suc. : Velocity : 1.2 ~ 2.4 m/s, ΔP/100m : 0.23 kg/cm2
- Disch. : Velocity : 1.8 ~ 2.4 m/s, ΔP/100m : 0.92 kg/cm2

PATH2 Calculation :
-> No problem

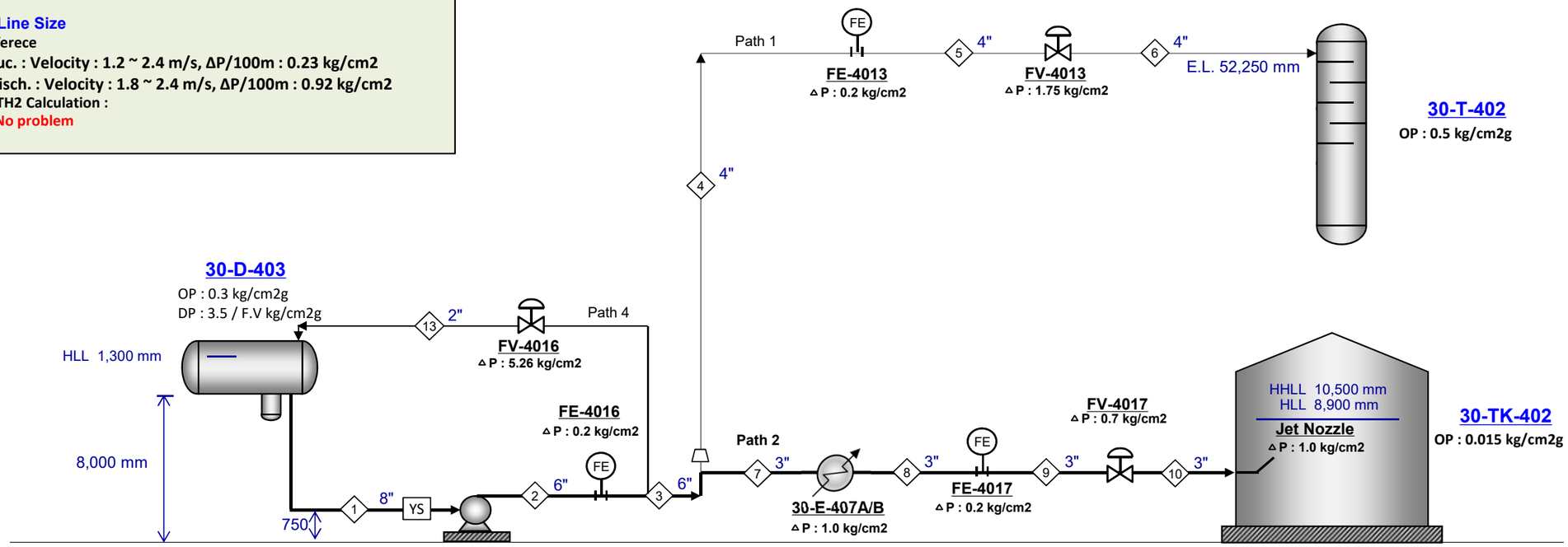

NOTE : 1. Assumed Data as below.
- Strainer △P = 0.07 kg/cm2
- Flowmeter △P = 0.2 kg/cm2
- Jet Nozzle △P = 1.0 kg/cm2

CV Input Data		
Item No.		
Des. Cap.		
Density		
D.P		
Char.		

PUMP CALCULATION

ITEM NUMBER	30-P-404A/B	
SUCTION		
Flow Rate	54.6	m3/hr
Operating Pres.	0.3	kg/cm².G
Design Pres.	3.5	kg/cm².G
Min. Static Head	8	meter
Max. Static Head	9.3	meter
Pump Shaft Level	0.75	meter
Vapor Pres.	1.009	kg/cm².A
Allowance	0	meter
Pipe Friction Loss	0.002	kg/cm²
Strainer	0.07	kg/cm²
Others		kg/cm²
Net Suction Pres.	0.80	kg/cm².G
Max. Suction Pres.	4.17	kg/cm².G
NPSH Available	10.46	meter
DISCHARGE		
Operating Pres.	0.015	kg/cm².G
Max. Static Head	11.2	meter
Pipe friction Loss	0.237	kg/cm².G
Pipe Gravity Loss	0.889	kg/cm³.G
Equip. Pres. Drop	2.4	kg/cm².G
Control Valves	3.3	kg/cm².G
Others		kg/cm².G
Disch. Press. Req'd	6.85	kg/cm².G
Diff. Pres.	6.05	kg/cm²
Diff. Head (Net)	77.2	meter
Hydr. Horsepower	9.0	KW
Est. Efficieny		%
Est. BHP		KW
Est. Shut-off Pres.	11.74	kg/cm².G
C.V dp / Friction	125.52	%

CONTROL VALVES

ITEM NO.	CAL. CV	RTD CV	% OPEN

		SUCTION			DISCHARGE																	
STREAM ID	UNIT	1			2	FE-4016	3	7	E-407A/B	8	FE-4017	9	FV-4017	10	Jet Nozzle							
Design Case																						
Phase		LIQUID			LIQUID		LIQUID	LIQUID		LIQUID		LIQUID		LIQUID								
Vapor Fraction																						
Normal Flow Rate	kg/hr	35,672			35,672		35,672	10,944		10,944		10,944		10,944								
Over Design	%	20			20		20	20		20		20		20								
Rated Flow Rate	kg/hr	42,806			42,806		42,806	13,133		13,133		13,133		13,133								
Temperature	°C	110.0			110.0		110.0	110.0		40.0		40.0		40.0								
Pressure @Inlet	kg/cm²G	0.30			6.85	6.85	6.65	6.64	6.63	5.63	5.62	5.42	5.42	2.11	1.02							
Pressure @Destination	kg/cm²G	0.76			6.85	6.65	6.64	6.63	5.63	5.62	5.42	5.42	2.11	1.02	0.01							
Line Size	inch	8			6		6	3		3		3		3								
Equivalent Length	M	34.8			15.3		7.7	14.1		7.0		7.0		226.0								
Elevation Change	M	-6.8			0.0		0.0	0.0		0.0		0.0		10.5								
Fluid, Density	kg/m³	784.0			784.0		784.0	784.0		850.3		850.3		850.3								
Fluid, Viscosity	cP	0.25			0.25		0.25	0.25		0.47		0.47		0.47								
Velocity	m/sec	0.47			0.81		0.81	0.98		0.90		0.90		0.90								
Pres. Drop by Friction	kg/cm²	0.002			0.004	0.000	0.002	0.013	0.000	0.006	0.000	0.006	0.000	0.205	0.000							
Pres. Drop by Gravity	kg/cm²	-0.529			0.000	0.000	0.000	0.000	0.000	0.000	0.000	0.000	0.000	0.889	0.000							
Pressure Drop / 100 M	kg/cm²	0.007			0.028		0.028	0.093		0.091		0.091		0.091								
Equipment Pres. Drop	kg/cm²	0.07				0.20			1.00		0.20				1.00							
CV PRESSURE DROP	kg/cm²												3.31									

LOTTE E&C 롯데건설주식회사	JOB NO.		PREPD BY: J.H.Kim	DATE: Sep. 26 '22	PAGE: 3 / 4	0
	SERVICE	Toluene Column Reflux Pump (Path 3)	CHKD BY: J.H.Myung	APPD BY: J.Y.Kim		

*** Result**

1) Diff. Pressure

Datasheet : 6.05 kg/cm2
PATH2 Calculation : 6.05 kg/cm2
-> No problem

2) Line Size

Referece
- Suc. : Velocity : 1.2 ~ 2.4 m/s, ΔP/100m : 0.23 kg/cm2
- Disch. : Velocity : 1.8 ~ 2.4 m/s, ΔP/100m : 0.92 kg/cm2

PATH2 Calculation :
-> No problem

PATH 3

GOVERNING

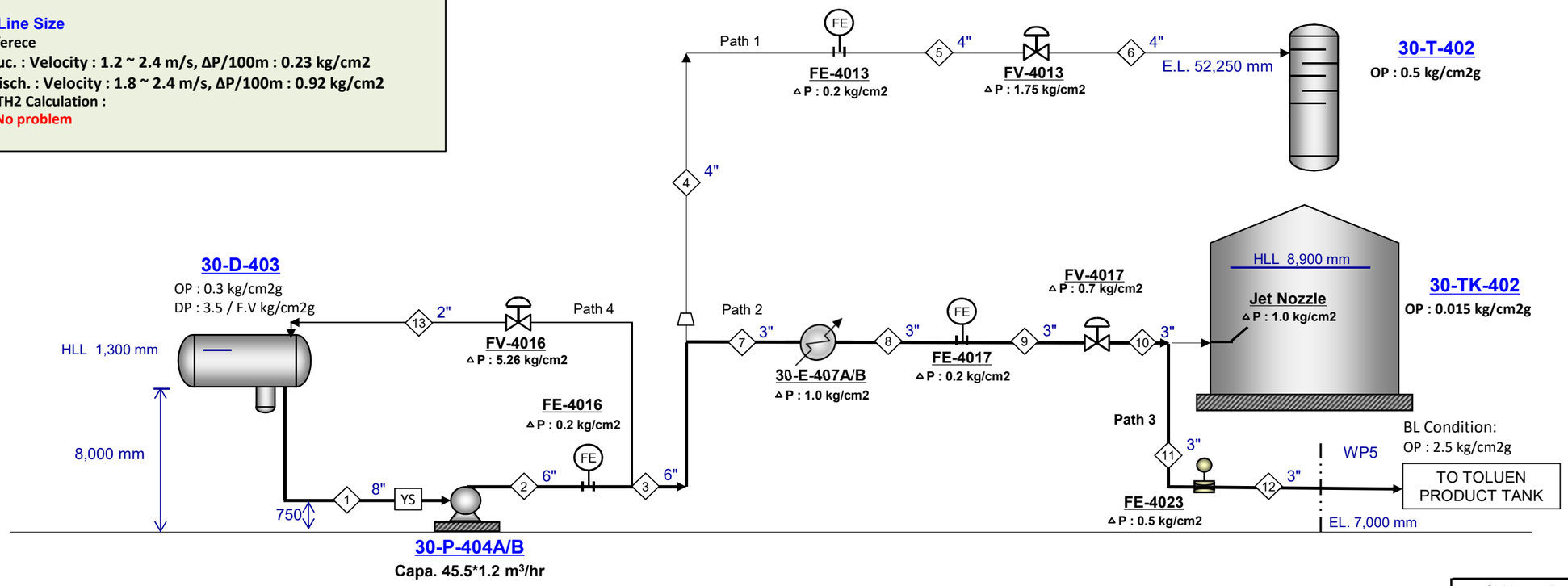

NOTE : 1. Assumed Data as below.
- Strainer △P = 0.07 kg/cm2
- Flowmeter △P = 0.2 kg/cm2

CV Input Data		
Item No.		
Des. Cap.		
Density		
D.P		
Char.		

PUMP CALCULATION

ITEM NUMBER	30-P-404A/B	
SUCTION		
Flow Rate	54.6	m3/hr
Operating Pres.	0.3	kg/cm².G
Design Pres.	3.5	kg/cm².G
Min. Static Head	8	meter
Max. Static Head	9.3	meter
Pump Shaft Level	0.75	meter
Vapor Pres.	1.009	kg/cm².A
Allowance	0	meter
Pipe Friction Loss	0.002	kg/cm²
Strainer	0.07	kg/cm²
Others		kg/cm²
Net Suction Pres.	0.80	kg/cm².G
Max. Suction Pres.	4.17	kg/cm².G
NPSH Available	10.46	meter
DISCHARGE	WP5	
Operating Pres.	2.500	kg/cm².G
Max. Static Head	7.0	meter
Pipe friction Loss	0.877	kg/cm².G
Pipe Gravity Loss	0.531	kg/cm³.G
Equip. Pres. Drop	1.9	kg/cm².G
Control Valves	0.7	kg/cm².G
Others	0.34	kg/cm².G
Disch. Press. Req'd	6.85	kg/cm².G
Diff. Pres.	6.05	kg/cm²
Diff. Head (Net)	77.2	meter
Hydr. Horsepower	9.0	KW
Est. Efficieny		%
Est. BHP		KW
Est. Shut-off Pres.	11.74	kg/cm².G
C.V dp / Friction	22.46	%

CONTROL VALVES

ITEM NO.	CAL. CV	RTD CV	% OPEN

		SUCTION			DISCHARGE																	
STREAM ID	UNIT	1			2	FE-4016	3	7	E-407A/B	8	FE-4017	9	FV-4017	11	FE-4023	12						
Design Case																						
Phase		LIQUID			LIQUID		LIQUID	LIQUID		LIQUID		LIQUID		LIQUID		LIQUID						
Vapor Fraction																						
Normal Flow Rate	kg/hr	35,672			35,672		35,672	10,944		10,944		10,944		10,944		10,944						
Over Design	%	20			20		20	20		20		20		20		20						
Rated Flow Rate	kg/hr	42,806			42,806		42,806	13,133		13,133		13,133		13,133		13,133						
Temperature	°C	110.0			110.0		110.0	110.0		40.0		40.0		40.0		40.0						
Pressure @Inlet	kg/cm²G	0.30			6.85	6.84	6.64	6.64	6.63	5.63	5.62	5.42	5.42	4.72	4.51	4.01						
Pressure @Destination	kg/cm²G	0.76			6.84	6.64	6.64	6.63	5.63	5.62	5.42	5.42	4.72	4.51	4.01	2.84						
Line Size	inch	8			6		6	3		3		3		3		3						
Equivalent Length	M	34.8			15.3		7.7	14.1		7.0		7.0		225.4		707						
Elevation Change	M	-6.8			0.0		0.0	0.0		0.0		0.0		0.0		6						
Fluid, Density	kg/m³	784.0			784.0		784.0	784.0		850.3		850.3		850.3		850.3						
Fluid, Viscosity	cP	0.25			0.25		0.25	0.25		0.47		0.47		0.47		0.47						
Velocity	m/sec	0.47			0.81		0.81	0.98		0.90		0.90		0.90		0.90						
Pres. Drop by Friction	kg/cm²	0.002			0.004	0.000	0.002	0.013	0.000	0.006	0.000	0.006	0.000	0.204	0.000	0.640						
Pres. Drop by Gravity	kg/cm²	-0.529			0.000	0.000	0.000	0.000	0.000	0.000	0.000	0.000	0.000	0.000	0.000	0.531						
Pressure Drop / 100 M	kg/cm²	0.007			0.028		0.028	0.093		0.091		0.091		0.091		0.091						
Equipment Pres. Drop	kg/cm²	0.07				0.20			1.00		0.20				0.50							
CV PRESSURE DROP	kg/cm²												0.7									

LOTTE E&C 롯데건설주식회사	JOB NO.		PREPD BY: J.H.Kim	DATE: Sep. 26 '22	PAGE: 4 / 4	0
	SERVICE	Toluene Column Reflux Pump (Path 4)	CHKD BY: J.H.Myung	APPD BY: J.Y.Kim		

*** Result**

1) Diff. Pressure

PATH 4

Datasheet : 6.05 kg/cm2
PATH1 Calculation : 6.05 kg/cm2
-> No problem

2) Line Size

Referece
- Suc. : Velocity : 1.2 ~ 2.4 m/s, ΔP/100m : 0.23 kg/cm2
- Disch. : Velocity : 1.8 ~ 2.4 m/s, ΔP/100m : 0.92 kg/cm2

PATH1 Calculation :
-> No problem

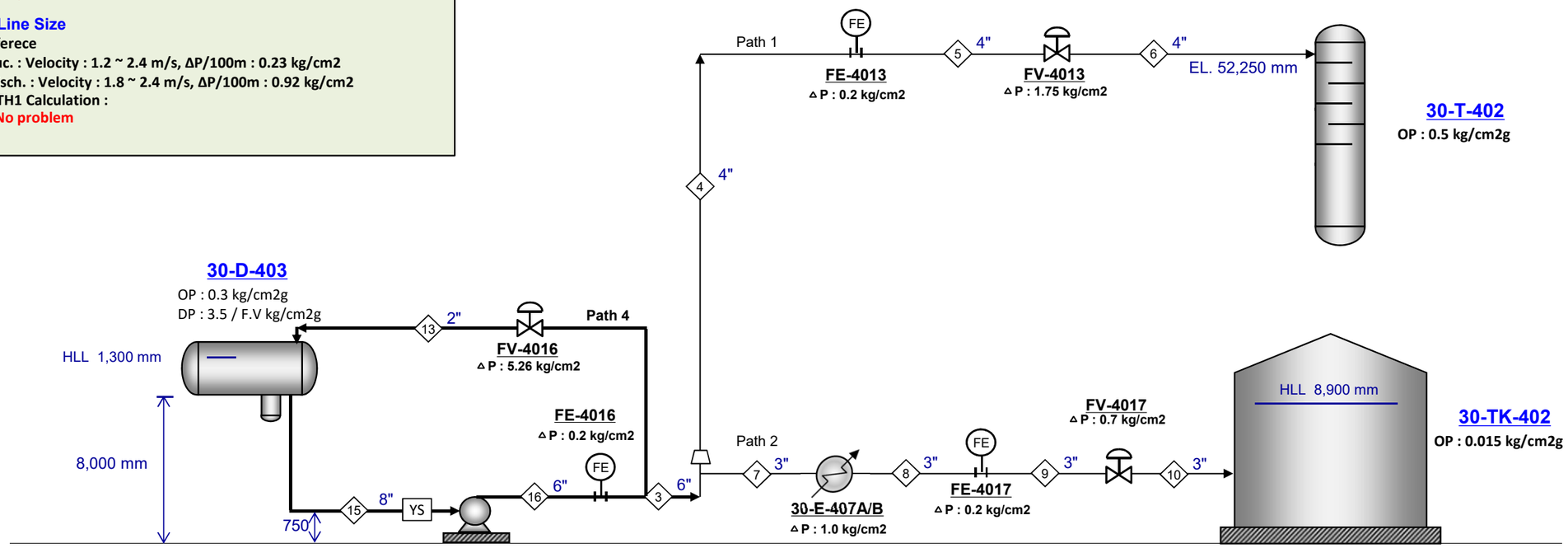

NOTE : 1. Assumed Data as below.
- Strainer △P = 0.07 kg/cm2
- Flowmeter △P = 0.2 kg/cm2

CV Input Data		
Item No.		
Des. Cap.		
Density		
D.P		
Char.		

PUMP CALCULATION

ITEM NUMBER	30-P-404A/B	
SUCTION		
Flow Rate	54.6	m3/hr
Operating Pres.	0.3	kg/cm².G
Design Pres.	3.5	kg/cm².G
Min. Static Head	8	meter
Max. Static Head	9.3	meter
Pump Shaft Level	0.75	meter
Vapor Pres.	1.009	kg/cm².A
Allowance	0	meter
Pipe Friction Loss	0.000	kg/cm²
Strainer	0.07	kg/cm²
Others		kg/cm²
Net Suction Pres.	0.80	kg/cm².G
Max. Suction Pres.	4.17	kg/cm².G
NPSH Available	10.48	meter
DISCHARGE		
Operating Pres.	0.3	kg/cm².G
Max. Static Head	10.0	meter
Pipe friction Loss	0.360	kg/cm².G
Pipe Gravity Loss	0.725	kg/cm³.G
Equip. Pres. Drop	0.2	kg/cm².G
Control Valves	5.3	kg/cm².G
Others		kg/cm².G
Disch. Press. Req'd	6.85	kg/cm².G
Diff. Pres.	6.05	kg/cm²
Diff. Head (Net)	77.1	meter
Hydr. Horsepower	3.3	KW
Est. Efficieny		%
Est. BHP		KW
Est. Shut-off Pres.	11.73	kg/cm².G
C.V dp / Friction	938.45	%

CONTROL VALVES

ITEM NO.	CAL. CV	RTD CV	% OPEN

		SUCTION			DISCHARGE																		
STREAM ID	UNIT	15			16	FE-4016	FV-4016	13															
Design Case																							
Phase		LIQUID			LIQUID			LIQUID															
Vapor Fraction																							
Normal Flow Rate	kg/hr	15,680			15,680			15,680															
Over Design	%	0			0			0															
Rated Flow Rate	kg/hr	15,680			15,680			15,680															
Temperature	°C	110.0			110.0			110.0															
Pressure @Inlet	kg/cm²G	0.30			6.85	6.85	6.65	1.39															
Pressure @Destination	kg/cm²G	0.76			6.85	6.65	1.39	0.30															
Line Size	inch	8			6			2															
Equivalent Length	M	34.8			15.3			36.3															
Elevation Change	M	-6.8			0.0			9.3															
Fluid, Density	kg/m³	784.0			784.0			784.0															
Fluid, Viscosity	cP	0.25			0.25			0.25															
Velocity	m/sec	0.17			0.30			2.57															
Pres. Drop by Friction	kg/cm²	0.000			0.001	0.000	0.000	0.360															
Pres. Drop by Gravity	kg/cm²	-0.529			0.000	0.000	0.000	0.725															
Pressure Drop / 100 M	kg/cm²	0.001			0.004			0.992															
Equipment Pres. Drop	kg/cm²	0.07				0.20																	
CV PRESSURE DROP	kg/cm²						5.26																

LINE IDENTIFICATION		1	2	3	4	5	6	7	8	9	10	11	12	13	14	15	16	17
SIMU. STREAM ID					Path 1			Path 2				Path 3						
SERVICE		Pump DS			Pump Capa * 69.3%			Pump Capa * 40.7%						PUMP MIN. FLOW				
TYPE OF FLOW	(L/V/2PH)	LIQUID	LIQUID	LIQUID	LIQUID	LIQUID	LIQUID	LIQUID	LIQUID	LIQUID	LIQUID	LIQUID	LIQUID	LIQUID	LIQUID	LIQUID	LIQUID	
OPERATING CONDITION																		
Temperature	C	110	110	110	110	110	110	110	40	40	40	40	40	110	40	110	110	
Pressure @up	Kg/cm2.G																	
Pressure @down	Kg/cm2.G	0.53	0.00	0.00	-0.01	-0.01	-4.14	-0.01	-0.01	-0.01	7.01	-0.20	-1.17	-1.09	-0.57	0.53	0.00	
PIPING INFORMATION																		
Nominal Size	inch	8.0	6.0	6.0	4.0	4.0	4.0	3.0	3.0	3.0	3.0	3.0	3.0	2.0	3.0	8.0	6.0	
Schedule or Class	-	40	40	40	40	40	40	40	40	40	40	40	40	40	40	40	40	
Line length,straight	m	26.8	10.0	5.0	5.0	5.0	61.5	10.0	5.0	5.0	160.5	160.0	698.1	26.8	114.0	26.8	10.0	
Eqivalent Length Over Design Factor	-	0.25	0.50	0.50	0.50	0.50	0.50	0.50	0.50	0.50	0.50	0.50	Fitting	0.50	0.50	0.25	0.50	
Net Elevation Change	m	(6.8)	0.0	0.0	0.0	0.0	51.5	0.0	0.0	0.0	10.5	0.0	6.3	9.3	5.0	(6.8)	0.0	
Equivalent Length	m	34.8	15.3	7.7	7.3	7.3	89.5	14.1	7.0	7.0	226.0	225.4	707.3	36.3	160.6	34.8	15.3	
Pipe inside Dia.	m	0.203	0.154	0.154	0.102	0.102	0.102	0.078	0.078	0.078	0.078	0.078	0.078	0.053	0.078	0.203	0.154	
Wall Roughness	mm	0.046	0.046	0.046	0.046	0.046	0.046	0.046	0.046	0.046	0.046	0.046	0.046	0.046	0.046	0.046	0.046	
LIQUID PHASE CALCULATION																		
Flow Rate	Kg/h	35,672	35,672	35,672	24,728	24,728	24,728	10,944	10,944	10,944	10,944	10,944	10,944	15,680	10,944	15,680	15,680	
Flow Rate Design Margin	%	20	20	20	20	20	20	20	20	20	20	20	20	0	20	0	0	
Density @PT	Kg/m3	784.0	784.0	784.0	784.0	784.0	784.0	784.0	850.3	850.3	850.3	850.3	850.3	784.0	850.3	784.0	784.0	
Viscosity @PT	cP	0.248	0.248	0.248	0.248	0.248	0.248	0.248	0.468	0.468	0.468	0.468	0.468	0.248	0.468	0.248	0.248	
Surface Tension	dyn/cm																	
Flow Rate, rated	kg/h	42,806	42,806	42,806	29,674	29,674	29,674	13,133	13,133	13,133	13,133	13,133	13,133	15,680	13,133	15,680	15,680	
Vol. Flow	m3/hr	54.6	54.6	54.6	37.8	37.8	37.8	16.8	15.4	15.4	15.4	15.4	15.4	20.0	15.4	20.0	20.0	
Velocity	m/s	0.47	0.81	0.81	1.28	1.28	1.28	0.98	0.90	0.90	0.90	0.90	0.90	2.57	0.90	0.17	0.30	
Reynolds No	-	3.01E+05	3.96E+05	3.96E+05	4.14E+05	4.14E+05	4.14E+05	2.40E+05	1.27E+05	1.27E+05	1.27E+05	1.27E+05	1.27E+05	4.26E+05	1.27E+05	1.10E+05	1.45E+05	
Friction Factor	-	0.0164	0.0166	0.0166	0.0175	0.0175	0.0175	0.0190	0.0201	0.0201	0.0201	0.0201	0.0201	0.0198	0.0201	0.0188	0.0184	
Press. @Out	Kg/cm2.G	0.527	-0.004	-0.002	-0.008	-0.008	-4.138	-0.013	-0.006	-0.006	-1.093	-0.204	-1.172	-1.085	-0.566	0.529	-0.001	
Pressure Drop by Friction	Kg/cm2	0.0025	0.004	0.002	0.008	0.008	0.100	0.013	0.006	0.006	0.205	0.204	0.640	0.360	0.145	0.000	0.001	
Pressure Drop by Gravity	Kg/cm2	-0.529	0.000	0.000	0.000	0.000	4.038	0.000	0.000	0.000	0.889	0.000	0.531	0.725	0.421	-0.529	0.000	
Dp / 100 m (by friction)	Kg/cm2	0.0072	0.0284	0.0284	0.1123	0.1123	0.1123	0.0927	0.0906	0.0906	0.0906	0.0906	0.0906	0.9921	0.0906	0.0011	0.0043	
VAPOR PHASE CALCULATION																		
Flow Rate,max op	Kg/h																	
Flow Rate Design Margin	%																	
Density @PT	Kg/m3																	
or MW	(-)																	
Compr. Z	(-)																	
Viscosity @PT	cP																	
Flow Rate,rated	Kg/h																	
Vol. Flow @in	m3/sec																	
Gas Density @in	Kg/m3																	
Velocity @in	m/s																	
Reynolds No	-																	
Friction Factor	-																	
Gas Dns @Out	Kg/m3																	
Velocity @Out	m/s																	
Mach no. @Out	-																	
Press. @Out	Kg/cm2.G																	
Pressure Drop by Friction	Kg/cm2																	
Pressure Drop by Gravity	Kg/cm2																	
Dp / 100 m (by friction)	Kg/cm2																	

30-P-405A/B

LOTTE E&C 롯데건설주식회사	JOB NO.		PREPD BY: J.H.Kim	DATE: Sep. 26 '22	PAGE: 1 / 2	0
	SERVICE	Toluene Column Bottoms Pump (Path 1)	CHKD BY: J.H.Myung	APPD BY: J.Y.Kim		

*** Result**

1) Diff. Pressure

PATH 1

Datasheet : 5.31 kg/cm2
PATH1 Calculation : 5.31 kg/cm2
-> No problem

2) Line Size

Referece
- Suc. : Velocity : 1.2 ~ 2.4 m/s, ΔP/100m : 0.23 kg/cm2
- Disch. : Velocity : 1.8 ~ 2.4 m/s, ΔP/100m : 0.92 kg/cm2

PATH1 Calculation :
-> No problem

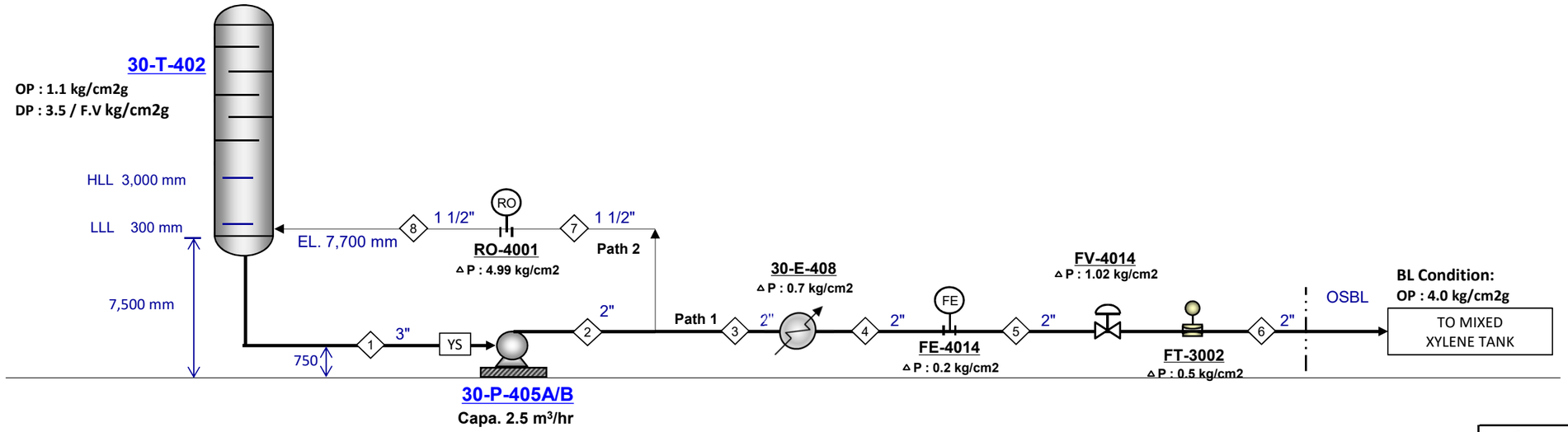

NOTE : 1. Assumed Data as below.
- Strainer △P = 0.07 kg/cm2
- Flowmeter △P = 0.2 kg/cm2

CV Input Data		
Item No.		
Des. Cap.		
Density		
D.P		
Char.		

PUMP CALCULATION		
ITEM NUMBER	**30-P-405A/B**	
SUCTION		
Flow Rate	3.2	m3/hr
Operating Pres.	1.1	kg/cm².G
Design Pres.	3.5	kg/cm².G
Min. Static Head	7.5	meter
Max. Static Head	10.5	meter
Pump Shaft Level	0.75	meter
Vapor Pres.	2.13	kg/cm².A
Allowance	0	meter
Pipe Friction Loss	0.000	kg/cm²
Strainer	0.07	kg/cm²
Others		kg/cm²
Net Suction Pres.	1.52	kg/cm².G
Max. Suction Pres.	4.21	kg/cm².G
NPSH Available	5.78	meter
DISCHARGE		
Operating Pres.	4.0	kg/cm².G
Max. Static Head	5.5	meter
Pipe friction Loss	0.010	kg/cm².G
Pipe Gravity Loss	0.401	kg/cm³.G
Equip. Pres. Drop	1.4	kg/cm².G
Control Valves	1.0	kg/cm².G
Others		kg/cm².G
Disch. Press. Req'd	6.83	kg/cm².G
Diff. Pres.	5.31	kg/cm²
Diff. Head (Net)	73	meter
Hydr. Horsepower	0.5	KW
Est. Efficieny		%
Est. BHP		KW
Est. Shut-off Pres.	10.85	kg/cm².G
C.V dp / Friction	72.32	%

CONTROL VALVES

ITEM NO.	CAL. CV	RTD CV	% OPEN

		SUCTION			DISCHARGE																	
STREAM ID	UNIT	1			2	3	30-E-408	4	FE-4014	5	FV-4014	FT-3002	6									
Design Case																						
Phase		LIQUID			LIQUID	LIQUID		LIQUID		LIQUID			LIQUID									
Vapor Fraction																						
Normal Flow Rate	kg/hr	2,326			2,326	505		505		505			505									
Over Design	%	0			0	10		10		10			10									
Rated Flow Rate	kg/hr	2,326			2,326	556		556		556			556									
Temperature	°C	166.0			166.0	166.0		40.0		40.0			40.0									
Pressure @Inlet	kg/cm²G	1.10			6.83	6.83	6.83	6.13	6.13	5.93	5.93	4.91	4.41									
Pressure @Destination	kg/cm²G	1.52			6.83	6.83	6.13	6.13	5.93	5.93	4.91	4.41	4.00									
Line Size	inch	3			2	2		2		2			2									
Equivalent Length	M	12.0			20.3	20.3		13.5		6.8			209									
Elevation Change	M	-6.8			0.0	0.0		0.0		0.0			5									
Fluid, Density	kg/m³	726.8			726.8	726.8		844.6		844.6			844.6									
Fluid, Viscosity	cP	0.18			0.18	0.18		0.55		0.55			0.55									
Velocity	m/sec	0.19			0.41	0.10		0.08		0.08			0.08									
Pres. Drop by Friction	kg/cm²	0.000			0.005	0.000	0.000	0.000	0.000	0.000	0.000	0.000	0.004									
Pres. Drop by Gravity	kg/cm²	-0.491			0.000	0.000	0.000	0.000	0.000	0.000	0.000	0.000	0.401									
Pressure Drop / 100 M	kg/cm²	0.004			0.026	0.002		0.002		0.002			0.002									
Equipment Pres. Drop	kg/cm²	0.07					0.70		0.20			0.50										
CV PRESSURE DROP	kg/cm²										1.02											

LOTTE E&C 롯데건설주식회사	JOB NO.		PREPD BY: J.H.Kim	DATE: Sep. 26 '22	PAGE: 2 / 2	0
	SERVICE	Toluene Column Bottoms Pump (Path 2)	CHKD BY: J.H.Myung	APPD BY: J.Y.Kim		

*** Result**

1) Diff. Pressure

Datasheet : 5.31 kg/cm2
PATH2 Calculation : 5.31 kg/cm2
-> No problem

2) Line Size

Referece
- Suc. : Velocity : 1.2 ~ 2.4 m/s, ΔP/100m : 0.23 kg/cm2
- Disch. : Velocity : 1.8 ~ 2.4 m/s, ΔP/100m : 0.92 kg/cm2

PATH2 Calculation :
-> No problem

PATH 2

GOVERNING

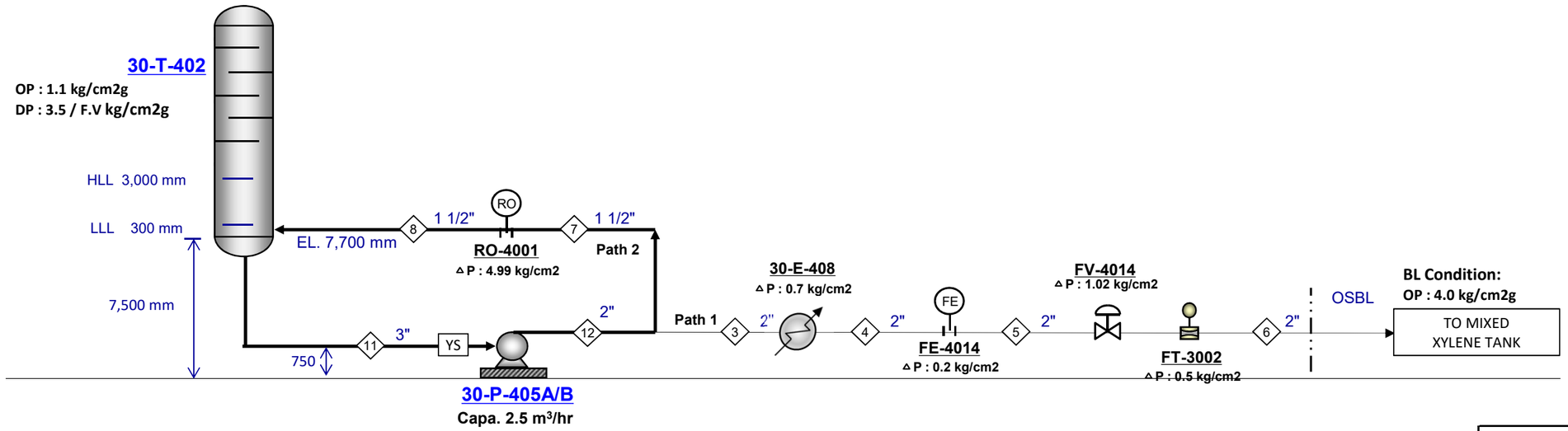

NOTE : 1. Assumed Data as below.
- Strainer △P = 0.07 kg/cm2
- Flowmeter △P = 0.2 kg/cm2

	CV Input Data	
Item No.		
Des. Cap.		
Density		
D.P		
Char.		

		SUCTION			DISCHARGE			
STREAM ID	UNIT	11			12	7	RO-4001	8
Design Case								
Phase		LIQUID			LIQUID	LIQUID		LIQUID
Vapor Fraction								
Normal Flow Rate	kg/hr	1,817			1,817	1,817		1,817
Over Design	%	0			0	0		0
Rated Flow Rate	kg/hr	1,817			1,817	1,817		1,817
Temperature	°C	166.0			166.0	166.0		166.0
Pressure @Inlet	kg/cm²G	1.10			6.83	6.83	6.82	1.83
Pressure @Destination	kg/cm²G	1.52			6.83	6.82	1.83	1.10
Line Size	inch	3			2	1.5		1.5
Equivalent Length	M	12.0			20.3	6.6		26.1
Elevation Change	M	-6.8			0.0	0.0		9.8
Fluid, Density	kg/m³	726.8			726.8	726.8		726.8
Fluid, Viscosity	cP	0.18			0.18	0.18		0.18
Velocity	m/sec	0.15			0.32	0.61		0.61
Pres. Drop by Friction	kg/cm²	0.000			0.003	0.005	0.000	0.022
Pres. Drop by Gravity	kg/cm²	-0.491			0.000	0.000	0.000	0.709
Pressure Drop / 100 M	kg/cm²	0.002			0.016	0.083		0.083
Equipment Pres. Drop	kg/cm²	0.07					4.99	
CV PRESSURE DROP	kg/cm²							

PUMP CALCULATION

ITEM NUMBER	30-P-405A/B	
SUCTION		
Flow Rate	3.2	m3/hr
Operating Pres.	1.1	kg/cm².G
Design Pres.	3.5	kg/cm².G
Min. Static Head	7.5	meter
Max. Static Head	10.5	meter
Pump Shaft Level	0.75	meter
Vapor Pres.	2.13	kg/cm².A
Allowance	0	meter
Pipe Friction Loss	0.000	kg/cm²
Strainer	0.07	kg/cm²
Others		kg/cm²
Net Suction Pres.	1.52	kg/cm².G
Max. Suction Pres.	4.21	kg/cm².G
NPSH Available	5.78	meter
DISCHARGE		
Operating Pres.	1.10	kg/cm².G
Max. Static Head	10.5	meter
Pipe friction Loss	0.030	kg/cm².G
Pipe Gravity Loss	0.709	kg/cm³.G
Equip. Pres. Drop	5.0	kg/cm².G
Control Valves	0.0	kg/cm².G
Others		kg/cm².G
Disch. Press. Req'd	6.83	kg/cm².G
Diff. Pres.	5.31	kg/cm²
Diff. Head (Net)	73	meter
Hydr. Horsepower	0.4	KW
Est. Efficieny		%
Est. BHP		KW
Est. Shut-off Pres.	10.84	kg/cm².G
C.V dp / Friction	0.00	%

CONTROL VALVES

ITEM NO.	CAL. CV	RTD CV	% OPEN

LINE IDENTIFICATION		1	2	3	4	5	6	7	8	9	10	11	12	13	14	15	16	17
SIMU. STREAM ID				Path 1				Path 2										
SERVICE		Pump DS		Pump DS 0.7 m3/hr				Pump DS 2.5 m3/hr										
TYPE OF FLOW	(L/V/2PH)	LIQUID	LIQUID	LIQUID	LIQUID	LIQUID	LIQUID	LIQUID	LIQUID	LIQUID	LIQUID	LIQUID	LIQUID					
OPERATING CONDITION																		
Temperature	C	166	166	166	40	40	40	166	166	40	40	166	166					
Pressure @up	Kg/cm2.G																	
Pressure @down	Kg/cm2.G	0.49	-0.01	0.00	0.00	0.00	-0.41	-0.01	-0.73	-0.42	-0.40	0.49	0.00					
PIPING INFORMATION																		
Nominal Size	inch	3.0	2.0	2.0	2.0	2.0	2.0	1.5	1.5	2.0	2.0	3.0	2.0					
Schedule or Class	-	40	40	40	40	40	40	80	80	40	40	40	40					
Line length,straight	m	10.0	15.0	15.0	10.0	5.0	154.8	5.0	19.8	105.0	100.0	10.0	15.0					
Eqivalent Length Over Design Factor	-	0.25	0.50	0.50	0.50	0.50	0.50	0.5	0.50	0.50	0.50	0.25	0.50					
Net Elevation Change	m	(6.8)	0.0	0.0	0.0	0.0	4.8	0.0	9.8	5.0	4.8	(6.8)	0.0					
Equivalent Length	m	12.0	20.3	20.3	13.5	6.8	209.4	6.6	26.1	142.1	135.3	12.0	20.3					
Pipe inside Dia.	m	0.078	0.053	0.053	0.053	0.053	0.053	0.038	0.038	0.053	0.053	0.078	0.053					
Wall Roughness	mm	0.046	0.046	0.046	0.046	0.046	0.046	0.046	0.046	0.046	0.046	0.046	0.046					
LIQUID PHASE CALCULATION																		
Flow Rate	Kg/h	2,326	2,326	505	505	505	505	1,817	1,817	505	505	1,817	1,817					
Flow Rate Design Margin	%			10	10	10	10			10	10							
Density @PT	Kg/m3	726.8	726.8	726.8	844.6	844.6	844.6	726.8	726.8	844.6	844.6	726.8	726.8					
Viscosity @PT	cP	0.177	0.177	0.177	0.550	0.550	0.550	0.177	0.177	0.550	0.550	0.177	0.177					
Surface Tension	dyn/cm																	
Flow Rate, rated	kg/h	2,326	2,326	556	556	556	556	1,817	1,817	556	556	1,817	1,817					
Vol. Flow	m3/hr	3.2	3.2	0.8	0.7	0.7	0.7	2.5	2.5	0.7	0.7	2.5	2.5					
Velocity	m/s	0.19	0.41	0.10	0.08	0.08	0.08	0.61	0.61	0.08	0.08	0.15	0.32					
Reynolds No	-	5.96E+04	8.85E+04	2.11E+04	6.80E+03	6.80E+03	6.80E+03	9.53E+04	9.53E+04	6.80E+03	6.80E+03	4.66E+04	6.92E+04					
Friction Factor	-	0.0222	0.0220	0.0274	0.0354	0.0354	0.0354	0.0229	0.0229	0.0354	0.0354	0.0231	0.0227					
Press. @Out	Kg/cm2.G	0.490	-0.005	0.000	0.000	0.000	-0.406	-0.005	-0.730	-0.421	-0.404	0.490	-0.003					
Pressure Drop by Friction	Kg/cm2	0.0004	0.005	0.000	0.000	0.000	0.004	0.005	0.022	0.003	0.003	0.000	0.003					
Pressure Drop by Gravity	Kg/cm2	-0.491	0.000	0.000	0.000	0.000	0.401	0.000	0.709	0.418	0.401	-0.491	0.000					
Dp / 100 m (by friction)	Kg/cm2	0.0037	0.0262	0.0019	0.0021	0.0021	0.0021	0.0828	0.0828	0.0021	0.0021	0.0023	0.0165					
VAPOR PHASE CALCULATION																		
Flow Rate,max op	Kg/h																	
Flow Rate Design Margin	%																	
Density @PT	Kg/m3																	
or MW	(-)																	
Compr. Z	(-)																	
Viscosity @PT	cP																	
Flow Rate,rated	Kg/h																	
Vol. Flow @in	m3/sec																	
Gas Density @in	Kg/m3																	
Velocity @in	m/s																	
Reynolds No	-																	
Friction Factor	-																	
Gas Dns @Out	Kg/m3																	
Velocity @Out	m/s																	
Mach no. @Out	-																	
Press. @Out	Kg/cm2.G																	
Pressure Drop by Friction	Kg/cm2																	
Pressure Drop by Gravity	Kg/cm2																	
Dp / 100 m (by friction)	Kg/cm2																	

30-P-406A/B

LOTTE E&C 롯데건설주식회사	JOB NO.		PREPD BY: J.H.Kim	DATE: Sep. 26 '22	PAGE: 1 / 2	0
	SERVICE	Benzene Transfer Pump (PATH1)	CHKD BY: J.H.Myung	APPD BY: J.Y.Kim		

*** Result**

1) Diff. Pressure

Datasheet : 6.68 kg/cm2
Calculation : 6.66 kg/cm2
-> No problem

2) Line Size

Reference
- Suc. : Velocity : 1.2 ~ 2.4 m/s, ΔP/100m : 0.23 kg/cm2
- Disch. : Velocity : 1.8 ~ 2.4 m/s, ΔP/100m : 0.92 kg/cm2

Calculation :
-> No problem

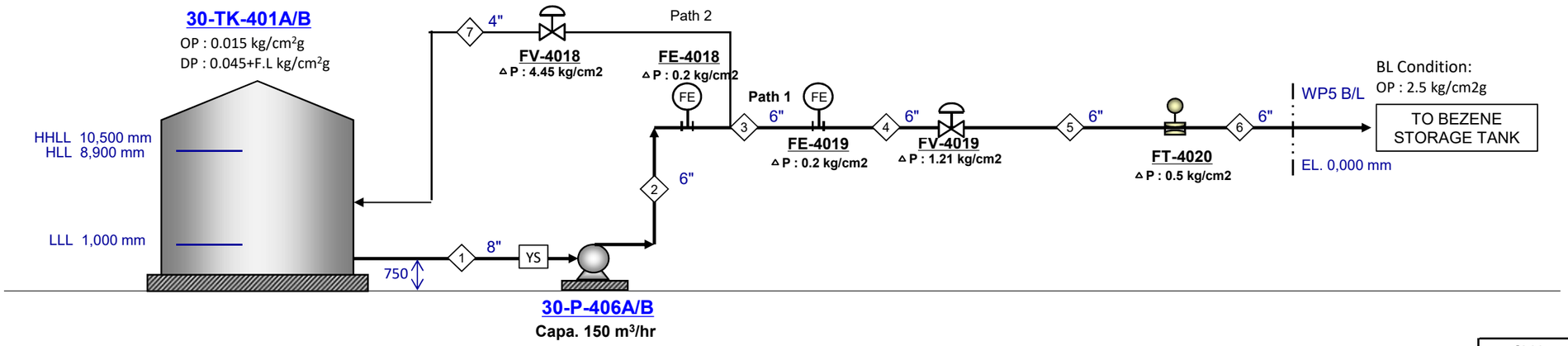

NOTE : 1. Assumed Data as below.
- Strainer △P = 0.07 kg/cm2
- Flowmeter △P = 0.2 kg/cm2
- Tank Foundation = 700 mm

CV Input Data		
Item No.		
Des. Cap.		
Density		
D.P		
Char.		

PUMP CALCULATION		
ITEM NUMBER	30-P-406A/B	
SUCTION	30-TK-401A/B	
Flow Rate	150.0	m3/hr
Operating Pres.	0.015	kg/cm².G
Design Pres.	0.045	kg/cm².G
Min. Static Head	1.7	meter
Max. Static Head	11.2	meter
Pump Shaft Level	0.75	meter
Vapor Pres.	0.247	kg/cm².A
Allowance	0	meter
Pipe Friction Loss	0.027	kg/cm²
Strainer	0.07	kg/cm²
Others		kg/cm²
Net Suction Pres.	0.00	kg/cm².G
Max. Suction Pres.	0.94	kg/cm².G
NPSH Available	9.13	meter
DISCHARGE	WP5 B/L	
Operating Pres.	2.5	kg/cm².G
Max. Static Head	0.8	meter
Pipe friction Loss	2.049	kg/cm².G
Pipe Gravity Loss	0.000	kg/cm³.G
Equip. Pres. Drop	0.9	kg/cm².G
Control Valves	1.2	kg/cm².G
Others		kg/cm².G
Disch. Press. Req'd	6.66	kg/cm².G
Diff. Pres.	6.66	kg/cm²
Diff. Head (Net)	77	meter
Hydr. Horsepower	27.2	KW
Est. Efficieny		%
Est. BHP		KW
Est. Shut-off Pres.	9.27	kg/cm².G
C.V dp / Friction	41.03	%

CONTROL VALVES			
ITEM NO.	CAL. CV	RTD CV	% OPEN

		SUCTION			DISCHARGE																	
STREAM ID	UNIT	1			2	FE-4018	3	FE-4019	4	FV-4019	5	FT-4020	6									
Design Case																						
Phase		LIQUID			LIQUID		LIQUID		LIQUID		LIQUID		LIQUID									
Vapor Fraction																						
Normal Flow Rate	kg/hr	129,150			129,150		129,150		129,150		129,150		129,150									
Over Design	%	0			0		0		0		0		0									
Rated Flow Rate	kg/hr	129,150			129,150		129,150		129,150		129,150		129,150									
Temperature	°C	40.0			40.0		40.0		40.0		40.0		40.0									
Pressure @Inlet	kg/cm²G	0.02			6.66	6.62	6.42	6.35	6.15	6.14	4.93	4.18	3.68									
Pressure @Destination	kg/cm²G	-0.08			6.62	6.42	6.35	6.15	6.14	4.93	4.18	3.68	2.50									
Line Size	inch	8			6		6		6		6		6									
Equivalent Length	M	47.3			15.3		30.7		7.7		61.3		780									
Elevation Change	M	-0.1			0.0		0.0		0.0		7.0		-7									
Fluid, Density	kg/m³	861.0			861.0		861.0		861.0		861.0		861.0									
Fluid, Viscosity	cP	0.496			0.496		0.496		0.496		0.496		0.496									
Velocity	m/sec	1.29			2.24		2.24		2.24		2.24		2.24									
Pres. Drop by Friction	kg/cm²	0.027			0.035	0.000	0.070	0.000	0.018	0.000	0.140	0.000	1.786									
Pres. Drop by Gravity	kg/cm²	-0.006			0.000	0.000	0.000	0.000	0.000	0.000	0.603	0.000	-0.603									
Pressure Drop / 100 M	kg/cm²	0.057			0.229		0.229		0.229		0.229		0.229									
Equipment Pres. Drop	kg/cm²	0.07				0.20		0.20				0.50										
CV PRESSURE DROP	kg/cm²									1.21												

LOTTE E&C 롯데건설주식회사	JOB NO.		PREPD BY:	J.H.Kim	DATE:	Sep. 26 '22	PAGE:	2 / 2	0
	SERVICE	Benzene Transfer Pump (PATH2)	CHKD BY:	J.H.Myung	APPD BY:	J.Y.Kim			

*** Result**

1) Diff. Pressure

Datasheet : 6.68 kg/cm2
Calculation : 6.68 kg/cm2
-> No problem

2) Line Size

Reference
- Suc. : Velocity : 1.2 ~ 2.4 m/s, ΔP/100m : 0.23 kg/cm2
- Disch. : Velocity : 1.8 ~ 2.4 m/s, ΔP/100m : 0.92 kg/cm2

Calculation :
-> No problem

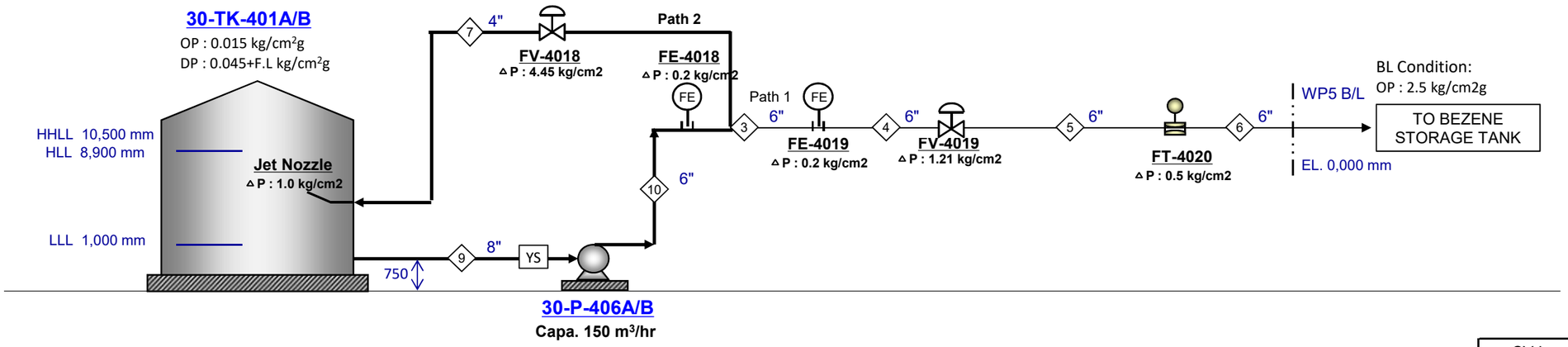

PUMP CALCULATION		
ITEM NUMBER	30-P-406A/B	
SUCTION	30-TK-401A/B	
Flow Rate	150.0	m3/hr
Operating Pres.	0.015	kg/cm².G
Design Pres.	0.045	kg/cm².G
Min. Static Head	1.7	meter
Max. Static Head	11.2	meter
Pump Shaft Level	0.75	meter
Vapor Pres.	0.247	kg/cm².A
Allowance	0	meter
Pipe Friction Loss	0.004	kg/cm²
Strainer	0.07	kg/cm²
Others		kg/cm²
Net Suction Pres.	0.02	kg/cm².G
Max. Suction Pres.	0.94	kg/cm².G
NPSH Available	9.39	meter
DISCHARGE	WP5 B/L	
Operating Pres.	0.015	kg/cm².G
Max. Static Head	11.2	meter
Pipe friction Loss	0.140	kg/cm².G
Pipe Gravity Loss	0.900	kg/cm³.G
Equip. Pres. Drop	1.2	kg/cm².G
Control Valves	4.5	kg/cm².G
Others		kg/cm².G
Disch. Press. Req'd	6.70	kg/cm².G
Diff. Pres.	6.68	kg/cm²
Diff. Head (Net)	78	meter
Hydr. Horsepower	9.8	KW
Est. Efficieny		%
Est. BHP		KW
Est. Shut-off Pres.	9.30	kg/cm².G
C.V dp / Friction	332.06	%

NOTE : 1. Assumed Data as below.
- Strainer △P = 0.07 kg/cm2
- Flowmeter △P = 0.2 kg/cm2
- Tank Foundation = 700 mm

CV Input Data		
Item No.		
Des. Cap.		
Density		
D.P		
Char.		

CONTROL VALVES			
ITEM NO.	CAL. CV	RTD CV	% OPEN

		SUCTION			DISCHARGE																		
STREAM ID	UNIT	9			10	FE-4018	FV-4018	7	Jet Nozzle														
Design Case																							
Phase		LIQUID			LIQUID			LIQUID															
Vapor Fraction																							
Normal Flow Rate	kg/hr	46,494			46,494			46,494															
Over Design	%	0			0			0															
Rated Flow Rate	kg/hr	46,494			46,494			46,494															
Temperature	°C	40.0			40.0			40.0															
Pressure @Inlet	kg/cm²G	0.02			6.70	6.70	6.50	2.05	1.02														
Pressure @Destination	kg/cm²G	-0.05			6.70	6.50	2.05	1.02	0.01														
Line Size	inch	8			6			4															
Equivalent Length	M	47.3			15.3			53.0															
Elevation Change	M	-0.1			0.0			10.5															
Fluid, Density	kg/m³	861.0			861.0			861.0															
Fluid, Viscosity	cP	0.496			0.496			0.496															
Velocity	m/sec	0.46			0.80			1.83															
Pres. Drop by Friction	kg/cm²	0.004			0.005	0.000	0.000	0.135	0.000														
Pres. Drop by Gravity	kg/cm²	-0.006			0.000	0.000	0.000	0.900	0.000														
Pressure Drop / 100 M	kg/cm²	0.008			0.032			0.255															
Equipment Pres. Drop	kg/cm²	0.07				0.20			1.00														
CV PRESSURE DROP	kg/cm²						4.45																

LINE IDENTIFICATION		1	2	3	4	5	6	7	8	9	10	11	12	13	14	15	16	17
SIMU. STREAM ID																		
SERVICE								PUMP MIN. FLOW										
TYPE OF FLOW	(L/V/2PH)	LIQUID	LIQUID	LIQUID	LIQUID	LIQUID	LIQUID	LIQUID	LIQUID	LIQUID	LIQUID							
OPERATING CONDITION																		
Temperature	C	40	40	40	40	40	40	40	40	40	40							
Pressure @up	Kg/cm2.G																	
Pressure @down	Kg/cm2.G	-0.02	-0.04	-0.07	-0.02	-0.74	-1.18	-1.03	-1.44	0.00	0.00							
PIPING INFORMATION																		
Nominal Size	inch	8.0	6.0	6.0	6.0	6.0	6.0	4.0	4.0	8.0	6.0							
Schedule or Class	-	40	40	40	40	40	40	40	40	40	40							
Line length,straight	m	36.4	10.0	20.0	5.0	40.0	760.6	36.4	274.0	36.4	10.0							
Eqivalent Length Over Design Factor	-	0.25	0.50	0.50	0.50	0.50	Fitting	0.50	0.50	0.25	0.50							
Net Elevation Change	m	(0.1)	0.0	0.0	0.0	7.0	(7.0)	10.5	5.0	(0.1)	0.0							
Equivalent Length	m	47.3	15.3	30.7	7.7	61.3	780.2	53.0	398.7	47.3	15.3							
Pipe inside Dia.	m	0.203	0.154	0.154	0.154	0.154	0.154	0.102	0.102	0.203	0.154							
Wall Roughness	mm	0.046	0.046	0.046	0.046	0.046	0.046	0.046	0.046	0.046	0.046							
LIQUID PHASE CALCULATION																		
Flow Rate	Kg/h	129,150	129,150	129,150	129,150	129,150	129,150	46,494	46,494	46,494	46,494							
Flow Rate Design Margin	%							0		0	0							
Density @PT	Kg/m3	861.0	861.0	861.0	861.0	861.0	861.0	861.0	861.0	861.0	861.0							
Viscosity @PT	cP	0.496	0.496	0.496	0.496	0.496	0.496	0.496	0.496	0.496	0.496							
Surface Tension	dyn/cm																	
Flow Rate, rated	kg/h	129,150	129,150	129,150	129,150	129,150	129,150	46,494	46,494	46,494	46,494							
Vol. Flow	m3/hr	150.0	150.0	150.0	150.0	150.0	150.0	54.0	54.0	54.0	54.0							
Velocity	m/s	1.29	2.24	2.24	2.24	2.24	2.24	1.83	1.83	0.46	0.80							
Reynolds No	-	4.54E+05	5.98E+05	5.98E+05	5.98E+05	5.98E+05	5.98E+05	3.24E+05	3.24E+05	1.64E+05	2.15E+05							
Friction Factor	-	0.0158	0.0161	0.0161	0.0161	0.0161	0.0161	0.0178	0.0178	0.0177	0.0176							
Press. @Out	Kg/cm2.G	-0.021	-0.035	-0.070	-0.018	-0.743	-1.183	-1.035	-1.443	0.002	-0.005							
Pressure Drop by Friction	Kg/cm2	0.0270	0.035	0.070	0.018	0.140	1.786	0.135	1.017	0.004	0.005							
Pressure Drop by Gravity	Kg/cm2	-0.006	0.000	0.000	0.000	0.603	-0.603	0.900	0.426	-0.006	0.000							
Dp / 100 m (by friction)	Kg/cm2	0.0570	0.2289	0.2289	0.2289	0.2289	0.2289	0.2552	0.2552	0.0083	0.0324							
VAPOR PHASE CALCULATION																		
Flow Rate,max op	Kg/h																	
Flow Rate Design Margin	%																	
Density @PT	Kg/m3																	
or MW	(-)																	
Compr. Z	(-)																	
Viscosity @PT	cP																	
Flow Rate,rated	Kg/h																	
Vol. Flow @in	m3/sec																	
Gas Density @in	Kg/m3																	
Velocity @in	m/s																	
Reynolds No	-																	
Friction Factor	-																	
Gas Dns @Out	Kg/m3																	
Velocity @Out	m/s																	
Mach no. @Out	-																	
Press. @Out	Kg/cm2.G																	
Pressure Drop by Friction	Kg/cm2																	
Pressure Drop by Gravity	Kg/cm2																	
Dp / 100 m (by friction)	Kg/cm2																	

30-P-407A/B

LOTTE E&C 롯데건설주식회사	JOB NO.		PREPD BY: J.H.Kim	DATE: Sep. 26 '22	PAGE: 1 / 2	0
	SERVICE	Toluene Transfer Pump (PATH1)	CHKD BY: J.H.Myung	APPD BY: J.Y.Kim		

*** Result**

1) Diff. Pressure

Datasheet : 6.7 kg/cm2
Calculation : 6.68 kg/cm2
-> No problem

2) Line Size

Reference
- Suc. : Velocity : 1.2 ~ 2.4 m/s, ΔP/100m : 0.23 kg/cm2
- Disch. : Velocity : 1.8 ~ 2.4 m/s, ΔP/100m : 0.92 kg/cm2

Calculation :
-> No problem

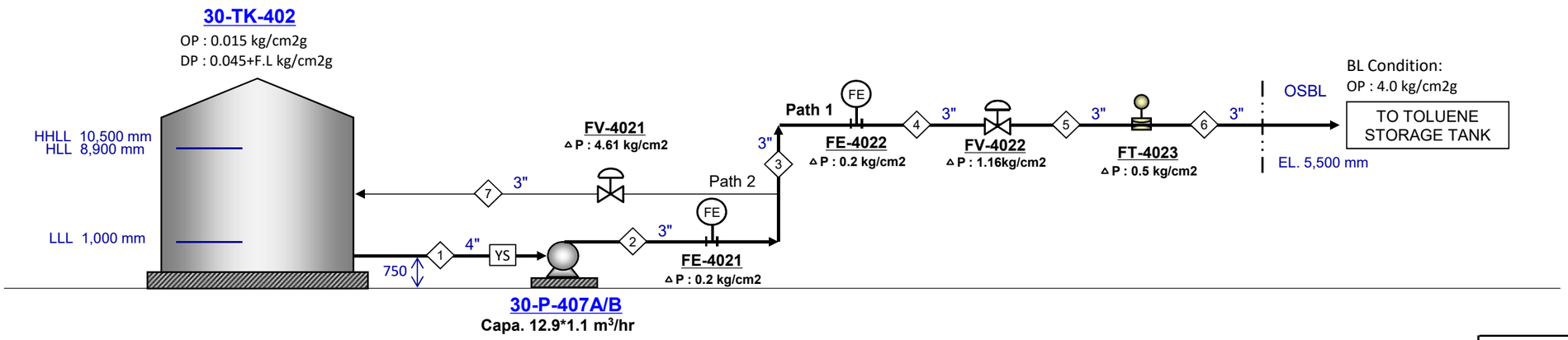

NOTE : 1. Assumed Data as below.
- Strainer △P = 0.07 kg/cm2
- Flowmeter △P = 0.2 kg/cm2
- Tank Foundation = 700 mm

PUMP CALCULATION		
ITEM NUMBER	30-P-407A/B	
SUCTION	30-TK-402	
Flow Rate	14.2	m3/hr
Operating Pres.	0.015	kg/cm^2.G
Design Pres.	0.045	kg/cm^2.G
Min. Static Head	1.7	meter
Max. Static Head	11.2	meter
Pump Shaft Level	0.75	meter
Vapor Pres.	0.08	kg/cm^2.A
Allowance	0	meter
Pipe Friction Loss	0.012	kg/cm^2
Strainer	0.07	kg/cm^2
Others		kg/cm^2
Net Suction Pres.	0.01	kg/cm^2.G
Max. Suction Pres.	0.93	kg/cm^2.G
NPSH Available	11.37	meter
DISCHARGE	B/L	
Operating Pres.	4.0	kg/cm^2.G
Max. Static Head	5.5	meter
Pipe friction Loss	0.228	kg/cm^2.G
Pipe Gravity Loss	0.404	kg/cm$^{3.G}$
Equip. Pres. Drop	0.9	kg/cm^2.G
Control Valves	1.2	kg/cm^2.G
Others		kg/cm^2.G
Disch. Press. Req'd	6.69	kg/cm^2.G
Diff. Pres.	6.68	kg/cm^2
Diff. Head (Net)	79	meter
Hydr. Horsepower	2.6	KW
Est. Efficieny		%
Est. BHP		KW
Est. Shut-off Pres.	9.28	kg/cm^2.G
C.V dp / Friction	102.85	%

CV Input Data		
Item No.		
Des. Cap.		
Density		
D.P		
Char.		

CONTROL VALVES			
ITEM NO.	CAL. CV	RTD CV	% OPEN

		SUCTION			DISCHARGE																	
STREAM ID	UNIT	1			2	FE-4021	3	FE-4022	4	FV-4022	5	FT-4023	6									
Design Case																						
Phase		LIQUID			LIQUID		LIQUID		LIQUID		LIQUID		LIQUID									
Vapor Fraction																						
Normal Flow Rate	kg/hr	10,965			10,965		10,965		10,965		10,965		10,965									
Over Design	%	10			10		10		10		10		10									
Rated Flow Rate	kg/hr	12,062			12,062		12,062		12,062		12,062		12,062									
Temperature	°C	40.0			40.0		40.0		40.0		40.0		40.0									
Pressure @Inlet	kg/cm^{2}G	0.02			6.69	6.68	6.48	6.47	6.27	6.26	5.10	5.08	4.58									
Pressure @Destination	kg/cm^{2}G	0.00			6.68	6.48	6.47	6.27	6.26	5.10	5.08	4.58	4.00									
Line Size	inch	4			3		3		3		3		3									
Equivalent Length	M	62.3			14.1		14.1		7.0		28.2		232.1									
Elevation Change	M	-0.8			0.0		0.0		0.0		0.0		4.8									
Fluid, Density	kg/m^3	850.0			850.0		850.0		850.0		850.0		850.0									
Fluid, Viscosity	cP	0.467			0.467		0.467		0.467		0.467		0.467									
Velocity	m/sec	0.48			0.83		0.83		0.83		0.83		0.83									
Pres. Drop by Friction	kg/cm^2	0.012			0.011	0.000	0.011	0.000	0.005	0.000	0.022	0.000	0.179									
Pres. Drop by Gravity	kg/cm^2	-0.064			0.000	0.000	0.000	0.000	0.000	0.000	0.000	0.000	0.404									
Pressure Drop / 100 M	kg/cm^2	0.020			0.077		0.077		0.077		0.077		0.077									
Equipment Pres. Drop	kg/cm^2	0.07				0.20		0.20				0.50										
CV PRESSURE DROP	kg/cm^2									1.16												

LOTTE E&C 롯데건설주식회사	JOB NO.		PREPD BY:	J.H.Kim	DATE:	Sep. 26 '22	PAGE:	2 / 2	0
	SERVICE	Toluene Transfer Pump (PATH2)	CHKD BY:	J.H.Myung	APPD BY:	J.Y.Kim			

*** Result**

1) Diff. Pressure

Datasheet : 6.7 kg/cm2
Calculation : 6.7 kg/cm2
-> No problem

2) Line Size

Reference
- Suc. : Velocity : 1.2 ~ 2.4 m/s, ΔP/100m : 0.23 kg/cm2
- Disch. : Velocity : 1.8 ~ 2.4 m/s, ΔP/100m : 0.92 kg/cm2

Calculation :
-> No problem

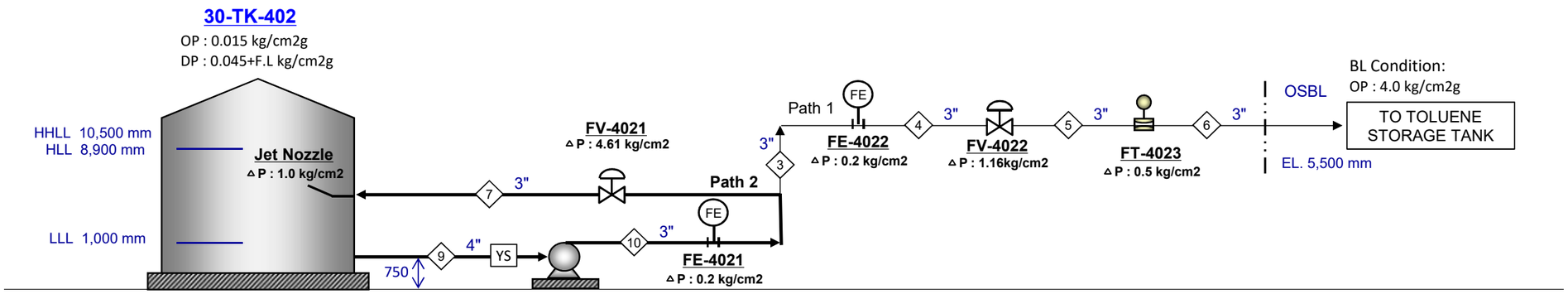

NOTE : 1. Assumed Data as below.
- Strainer △P = 0.07 kg/cm2
- Flowmeter △P = 0.2 kg/cm2
- Tank Foundation = 700 mm

PUMP CALCULATION		
ITEM NUMBER	30-P-407A/B	
SUCTION	30-TK-402	
Flow Rate	14.2	m3/hr
Operating Pres.	0.015	$kg/cm^2.G$
Design Pres.	0.045	$kg/cm^2.G$
Min. Static Head	1.7	meter
Max. Static Head	11.2	meter
Pump Shaft Level	0.75	meter
Vapor Pres.	0.08	$kg/cm^2.A$
Allowance	0	meter
Pipe Friction Loss	0.003	kg/cm^2
Strainer	0.07	kg/cm^2
Others		kg/cm^2
Net Suction Pres.	0.02	$kg/cm^2.G$
Max. Suction Pres.	0.93	$kg/cm^2.G$
NPSH Available	11.48	meter
DISCHARGE	30-TK-402	
Operating Pres.	0.015	$kg/cm^2.G$
Max. Static Head	11.2	meter
Pipe friction Loss	0.013	$kg/cm^2.G$
Pipe Gravity Loss	0.888	$kg/cm^{3.G}$
Equip. Pres. Drop	1.2	$kg/cm^2.G$
Control Valves	4.6	$kg/cm^2.G$
Others		$kg/cm^2.G$
Disch. Press. Req'd	6.73	$kg/cm^2.G$
Diff. Pres.	6.70	kg/cm^2
Diff. Head (Net)	79	meter
Hydr. Horsepower	1.1	KW
Est. Efficieny		%
Est. BHP		KW
Est. Shut-off Pres.	9.31	$kg/cm^2.G$
C.V dp / Friction	379.95	%

CV Input Data		
Item No.		
Des. Cap.		
Density		
D.P		
Char.		

CONTROL VALVES			
ITEM NO.	CAL. CV	RTD CV	% OPEN

		SUCTION			DISCHARGE																		
STREAM ID	UNIT	9			10	FE-4021	FV-4021	7	Jet Nozzle														
Design Case																							
Phase		LIQUID			LIQUID			LIQUID															
Vapor Fraction																							
Normal Flow Rate	kg/hr	5,100			5,100			5,100															
Over Design	%	0			0			0															
Rated Flow Rate	kg/hr	5,100			5,100			5,100															
Temperature	°C	40.0			40.0			40.0															
Pressure @Inlet	kg/cm^2G	0.02			6.73	6.72	6.52	1.91	1.02														
Pressure @Destination	kg/cm^2G	0.01			6.72	6.52	1.91	1.02	0.01														
Line Size	inch	4			3			3															
Equivalent Length	M	62.3			14.1			71.6															
Elevation Change	M	-0.8			0.0			10.5															
Fluid, Density	kg/m^3	850.0			850.0			850.0															
Fluid, Viscosity	cP	0.467			0.467			0.467															
Velocity	m/sec	0.20			0.35			0.35															
Pres. Drop by Friction	kg/cm^2	0.003			0.002	0.000	0.000	0.011	0.000														
Pres. Drop by Gravity	kg/cm^2	-0.064			0.000	0.000	0.000	0.888	0.000														
Pressure Drop / 100 M	kg/cm^2	0.004			0.016			0.016															
Equipment Pres. Drop	kg/cm^2	0.07				0.20			1.00														
CV PRESSURE DROP	kg/cm^2						4.61																

LINE IDENTIFICATION		1	2	3	4	5	6	7	8	9	10	11	12	13	14	15	16	17
SIMU. STREAM ID																		
SERVICE								PUMP MIN. FLOW										
TYPE OF FLOW	(L/V/2PH)	LIQUID	LIQUID	LIQUID	LIQUID	LIQUID	LIQUID	LIQUID	LIQUID	LIQUID	LIQUID							
OPERATING CONDITION																		
Temperature	C	40	40	40	40	40	40	40	40	40	40							
Pressure @up	Kg/cm2.G																	
Pressure @down	Kg/cm2.G	0.05	-0.01	-0.01	-0.01	-0.02	-0.58	-0.90	-0.49	0.06	0.00							
PIPING INFORMATION																		
Nominal Size	inch	4.0	3.0	3.0	3.0	3.0	3.0	3.0	4.0	4.0	3.0							
Schedule or Class	-	40	40	40	40	40	40	40	40	40	40							
Line length,straight	m	50.8	10.0	10.0	5.0	20.0	164.8	50.8	238.0	50.8	10.0							
Eqivalent Length Over Design Factor	-	0.25	0.50	0.50	0.50	0.50	0.50	0.50	0.50	0.25	0.50							
Net Elevation Change	m	(0.8)	0.0	0.0	0.0	0.0	4.8	10.5	5.0	(0.8)	0.0							
Equivalent Length	m	62.3	14.1	14.1	7.0	28.2	232.1	71.6	346.3	62.3	14.1							
Pipe inside Dia.	m	0.102	0.078	0.078	0.078	0.078	0.078	0.078	0.102	0.102	0.078							
Wall Roughness	mm	0.046	0.046	0.046	0.046	0.046	0.046	0.046	0.046	0.046	0.046							
LIQUID PHASE CALCULATION																		
Flow Rate	Kg/h	10,965	10,965	10,965	10,965	10,965	10,965	5,100	10,965	5,100	5,100							
Flow Rate Design Margin	%	10	10	10	10	10	10	0	10	0	0							
Density @PT	Kg/m3	850.0	850.0	850.0	850.0	850.0	850.0	850.0	850.0	850.0	850.0							
Viscosity @PT	cP	0.467	0.467	0.467	0.467	0.467	0.467	0.467	0.467	0.467	0.467							
Surface Tension	dyn/cm																	
Flow Rate, rated	kg/h	12,062	12,062	12,062	12,062	12,062	12,062	5,100	12,062	5,100	5,100							
Vol. Flow	m3/hr	14.2	14.2	14.2	14.2	14.2	14.2	6.0	14.2	6.0	6.0							
Velocity	m/s	0.48	0.83	0.83	0.83	0.83	0.83	0.35	0.48	0.20	0.35							
Reynolds No	-	8.93E+04	1.17E+05	1.17E+05	1.17E+05	1.17E+05	1.17E+05	4.96E+04	8.93E+04	3.78E+04	4.96E+04							
Friction Factor	-	0.0204	0.0203	0.0203	0.0203	0.0203	0.0203	0.0229	0.0204	0.0236	0.0229							
Press. @Out	Kg/cm2.G	0.051	-0.011	-0.011	-0.005	-0.022	-0.583	-0.899	-0.490	0.061	-0.002							
Pressure Drop by Friction	Kg/cm2	0.0124	0.011	0.011	0.005	0.022	0.179	0.011	0.069	0.003	0.002							
Pressure Drop by Gravity	Kg/cm2	-0.064	0.000	0.000	0.000	0.000	0.404	0.888	0.421	-0.064	0.000							
Dp / 100 m (by friction)	Kg/cm2	0.0199	0.0771	0.0771	0.0771	0.0771	0.0771	0.0155	0.0200	0.0041	0.0155							
VAPOR PHASE CALCULATION																		
Flow Rate,max op	Kg/h																	
Flow Rate Design Margin	%																	
Density @PT	Kg/m3																	
or MW	(-)																	
Compr. Z	(-)																	
Viscosity @PT	cP																	
Flow Rate,rated	Kg/h																	
Vol. Flow @in	m3/sec																	
Gas Density @in	Kg/m3																	
Velocity @in	m/s																	
Reynolds No	-																	
Friction Factor	-																	
Gas Dns @Out	Kg/m3																	
Velocity @Out	m/s																	
Mach no. @Out	-																	
Press. @Out	Kg/cm2.G																	
Pressure Drop by Friction	Kg/cm2																	
Pressure Drop by Gravity	Kg/cm2																	
Dp / 100 m (by friction)	Kg/cm2																	

30-P-601A/B

LOTTE E&C 롯데건설주식회사

JOB NO.		PREPD BY:	J.H.Kim	DATE:	Sep. 26 '22	PAGE:	1 / 3	0
SERVICE	Steam Condensate Transfer Pump (Path 1)	CHKD BY:	J.H.Myung	APPD BY:	J.Y.Kim			

*** Result**

1) Diff. Pressure

Datasheet : 3.81 kg/cm2
PATH2 Calculation : 3.81 kg/cm2
-> No problem

2) Line Size

Reference
- Suc. : Velocity : 1.2 ~ 2.4 m/s, ΔP/100m : 0.23 kg/cm2
- Disch. : Velocity : 2.4 ~ 3.0 m/s, ΔP/100m : 0.92 kg/cm2

PATH2 Calculation :
-> No problem

PATH 1

GOVERNING

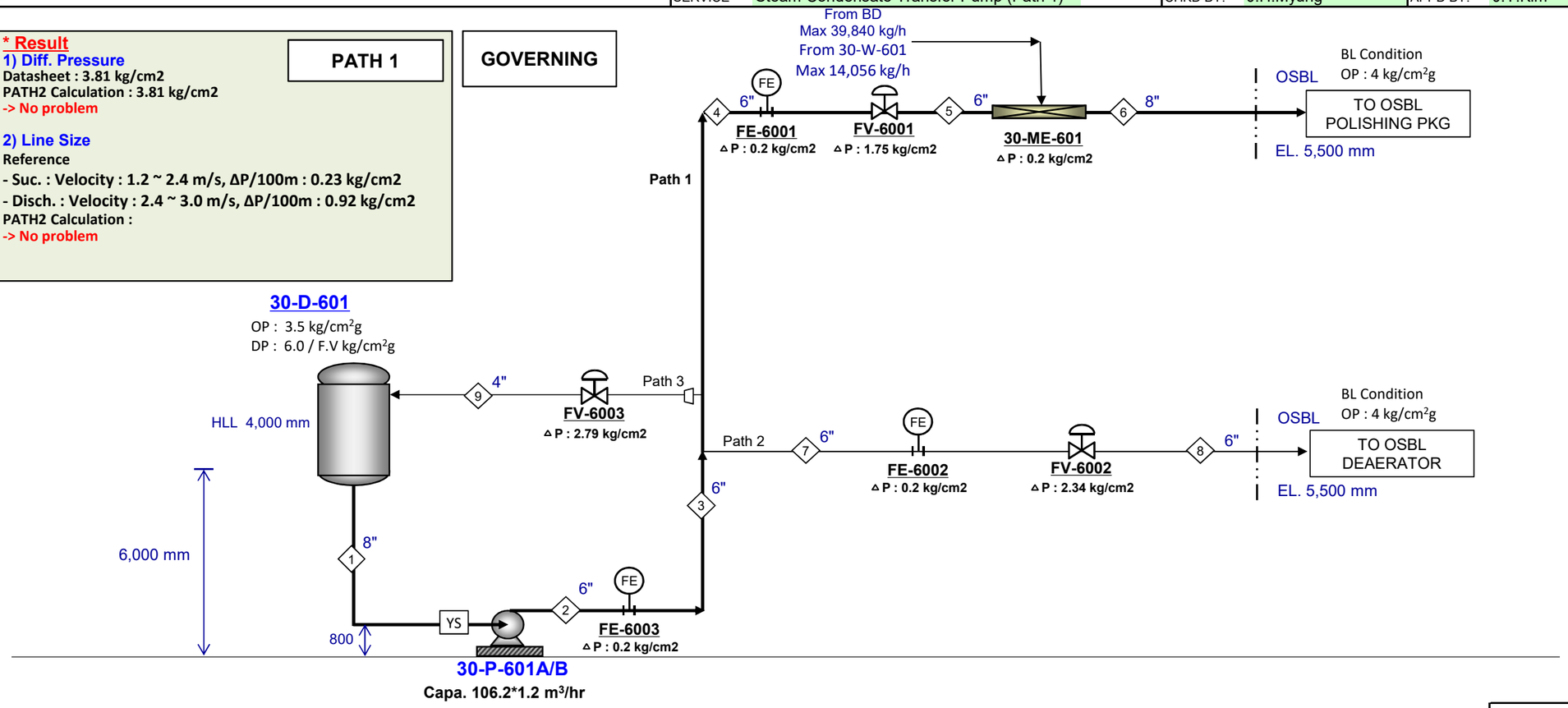

NOTE : 1. Assumed Data as below.
- Strainer △P = 0.07 kg/cm2
- Flowmeter △P = 0.2 kg/cm2
- Mixer △P = 0.2 kg/cm2
- BL Press. = 4 kg/cm2

CV Input Data		
Item No.		
Des. Cap.		
Density		
D.P		
Char.		

PUMP CALCULATION

ITEM NUMBER	30-P-601A/B	
SUCTION		
Flow Rate	132.4	m3/hr
Operating Pres.	3.5	kg/cm².G
Design Pres.	6	kg/cm².G
Min. Static Head	6	meter
Max. Static Head	10	meter
Pump Shaft Level	0.8	meter
Vapor Pres.	4.533	kg/cm².A
Allowance	0	meter
Pipe Friction Loss	0.014	kg/cm²
Strainer	0.07	kg/cm²
Others		kg/cm²
Net Suction Pres.	3.89	kg/cm².G
Max. Suction Pres.	6.85	kg/cm².G
NPSH Available	4.28	meter
DISCHARGE		
Operating Pres.	4	kg/cm².G
Max. Static Head	5.5	meter
Pipe friction Loss	0.412	kg/cm².G
Pipe Gravity Loss	0.409	kg/cm³.G
Equip. Pres. Drop	0.6	kg/cm².G
Control Valves	1.8	kg/cm².G
Others	0.53	kg/cm².G
Disch. Press. Req'd	7.70	kg/cm².G
Diff. Pres.	3.81	kg/cm²
Diff. Head (Net)	41.5	meter
Hydr. Horsepower	13.7	KW
Est. Efficieny		%
Est. BHP		KW
Est. Shut-off Pres.	11.60	kg/cm².G
C.V dp / Friction	113.47	%

CONTROL VALVES

ITEM NO.	CAL. CV	RTD CV	% OPEN

		SUCTION			DISCHARGE																	
STREAM ID	UNIT	1			2	FE-6003	3	4	FE-6001	FV-6001	5	ME-601	6									
Design Case																						
Phase		LIQUID			LIQUID		LIQUID	LIQUID			LIQUID		LIQUID									
Vapor Fraction																						
Normal Flow Rate	kg/hr	101,373			101,373		101,373	101,373			101,373		175,544									
Over Design	%	20			20		20	20			20		0									
Rated Flow Rate	kg/hr	121,648			121,648		121,648	121,648			121,648		175,544									
Temperature	°C	148.0			148.0		148.0	148.0			148.0		128.0									
Pressure @Inlet	kg/cm²G	3.50			7.70	7.67	7.47	7.43	7.42	7.22	5.47	3.77	3.57									
Pressure @Destination	kg/cm²G	3.89			7.67	7.47	7.43	7.42	7.22	5.47	3.77	3.57	4.53									
Line Size	inch	8			6		6	6			6		8									
Equivalent Length	M	32.5			15.3		23.0	7.7			61.3		240									
Elevation Change	M	-5.2			0.0		0.0	0.0			17.2		-13									
Fluid, Density	kg/m³	918.6			918.9		918.9	918.9			918.7		937.3									
Fluid, Viscosity	cP	0.184			0.184		0.184	0.184			0.184		0.216									
Velocity	m/sec	1.14			1.97		1.97	1.97			1.97		1.61									
Pres. Drop by Friction	kg/cm²	0.014			0.028	0.000	0.042	0.014	0.000	0.000	0.112	0.000	0.216									
Pres. Drop by Gravity	kg/cm²	-0.478			0.000	0.000	0.000	0.000	0.000	0.000	1.580	0.000	-1.172									
Pressure Drop / 100 M	kg/cm²	0.045			0.183		0.183	0.183			0.183		0.090									
Equipment Pres. Drop	kg/cm²	0.07				0.20			0.20			0.20										
CV PRESSURE DROP	kg/cm²									1.75												

LOTTE E&C 롯데건설주식회사	JOB NO.		PREPD BY:	J.H.Kim	DATE:	Sep. 26 '22	PAGE:	2 / 3	0
	SERVICE	Steam Condensate Transfer Pump (Path 2)	CHKD BY:	J.H.Myung	APPD BY:	J.Y.Kim			

*** Result**

1) Diff. Pressure

PATH 2

Datasheet : 3.81 kg/cm2
PATH2 Calculation : 3.81 kg/cm2
-> No problem

2) Line Size

Reference
- Suc. : Velocity : 1.2 ~ 2.4 m/s, ΔP/100m : 0.23 kg/cm2
- Disch. : Velocity : 2.4 ~ 3.0 m/s, ΔP/100m : 0.92 kg/cm2

PATH2 Calculation :
-> No problem

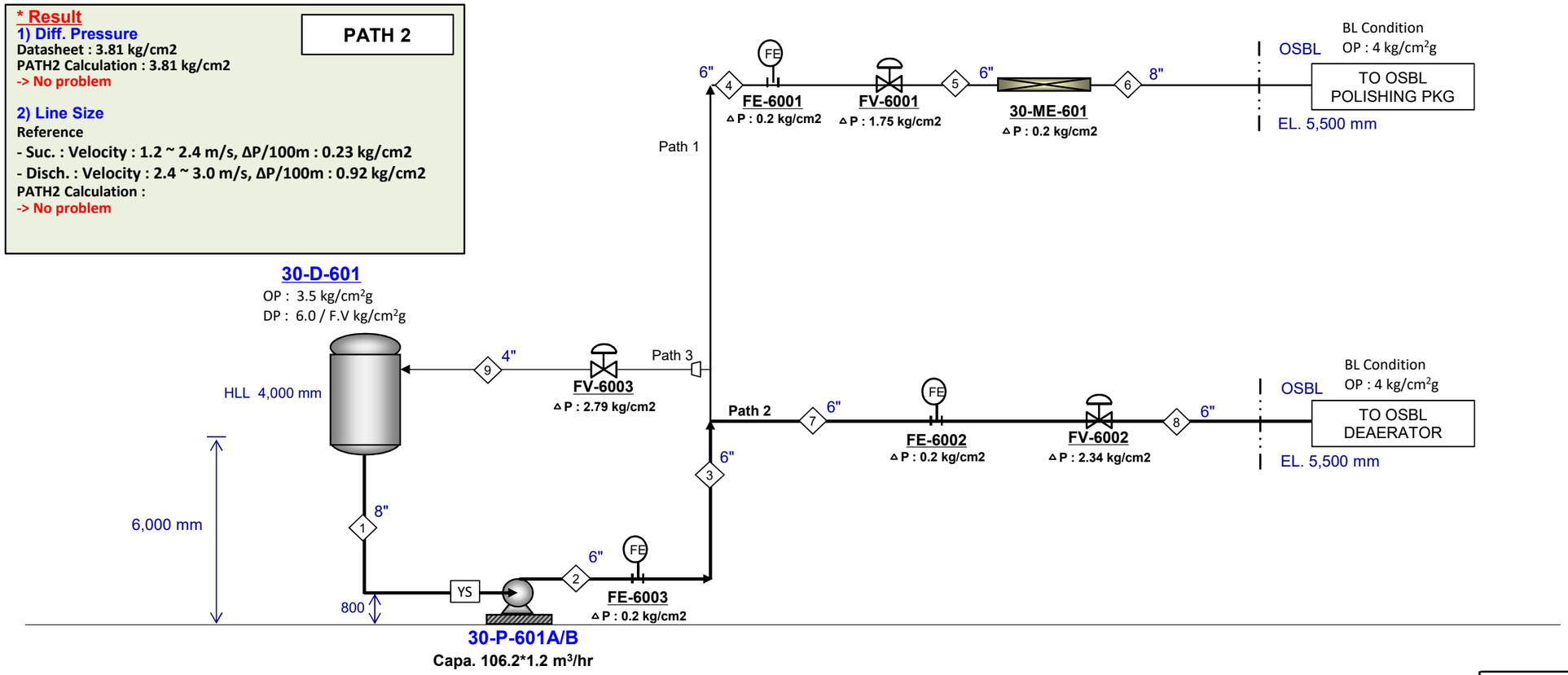

NOTE : 1. Assumed Data as below.
- Strainer △P = 0.07 kg/cm2
- Flowmeter △P = 0.2 kg/cm2
- BL Press. = 4 kg/cm2

CV Input Data		
Item No.		
Des. Cap.		
Density		
D.P		
Char.		

PUMP CALCULATION

ITEM NUMBER	30-P-601A/B	
SUCTION		
Flow Rate	132.4	m3/hr
Operating Pres.	3.5	kg/cm².G
Design Pres.	6	kg/cm².G
Min. Static Head	6	meter
Max. Static Head	10	meter
Pump Shaft Level	0.8	meter
Vapor Pres.	4.533	kg/cm².A
Allowance	0	meter
Pipe Friction Loss	0.014	kg/cm²
Strainer	0.07	kg/cm²
Others		kg/cm²
Net Suction Pres.	3.89	kg/cm².G
Max. Suction Pres.	6.85	kg/cm².G
NPSH Available	4.28	meter
DISCHARGE		
Operating Pres.	4.0	kg/cm².G
Max. Static Head	5.5	meter
Pipe friction Loss	0.532	kg/cm².G
Pipe Gravity Loss	0.432	kg/cm³.G
Equip. Pres. Drop	2.7	kg/cm².G
Control Valves	0.0	kg/cm².G
Others		kg/cm².G
Disch. Press. Req'd	7.70	kg/cm².G
Diff. Pres.	3.81	kg/cm²
Diff. Head (Net)	41.5	meter
Hydr. Horsepower	13.7	KW
Est. Efficieny		%
Est. BHP		KW
Est. Shut-off Pres.	11.61	kg/cm².G
C.V dp / Friction	0.00	%

CONTROL VALVES

ITEM NO.	CAL. CV	RTD CV	% OPEN

		SUCTION			DISCHARGE																	
STREAM ID	UNIT	1			2	FE-6003	3	7	FE-6002	FV-6002	8											
Design Case																						
Phase		LIQUID			LIQUID		LIQUID	LIQUID			LIQUID											
Vapor Fraction																						
Normal Flow Rate	kg/hr	101,373			101,373		101,373	101,373			101,373											
Over Design	%	20			20		20	20			20											
Rated Flow Rate	kg/hr	121,648			121,648		121,648	121,648			121,648											
Temperature	°C	148.0			148.0		148.0	148.0			148.0											
Pressure @Inlet	kg/cm²G	3.50			7.70	7.68	7.48	7.43	7.39	7.19	4.85											
Pressure @Destination	kg/cm²G	3.89			7.68	7.48	7.43	7.39	7.19	4.85	4.00											
Line Size	inch	8			6		6	6			6											
Equivalent Length	M	32.5			15.3		23.0	23.0			229.9											
Elevation Change	M	-5.2			0.0		0.0	0.0			4.7											
Fluid, Density	kg/m³	918.6			918.9		918.9	918.9			918.7											
Fluid, Viscosity	cP	0.184			0.184		0.184	0.184			0.184											
Velocity	m/sec	1.14			1.97		1.97	1.97			1.97											
Pres. Drop by Friction	kg/cm²	0.014			0.028	0.000	0.042	0.042	0.000	0.000	0.420											
Pres. Drop by Gravity	kg/cm²	-0.478			0.000	0.000	0.000	0.000	0.000	0.000	0.432											
Pressure Drop / 100 M	kg/cm²	0.045			0.183		0.183	0.183			0.183											
Equipment Pres. Drop	kg/cm²	0.07				0.20			0.20	2.34												
CV PRESSURE DROP	kg/cm²																					

LOTTE E&C 롯데건설주식회사	JOB NO.		PREPD BY: J.H.Kim	DATE: Sep. 26 '22	PAGE: 3 / 3	0
	SERVICE	Steam Condensate Transfer Pump (Path 3)	CHKD BY: J.H.Myung	APPD BY: J.Y.Kim		

*** Result**

1) Diff. Pressure

PATH 3

Datasheet : 3.81 kg/cm2
PATH2 Calculation : 3.81 kg/cm2
-> No problem

2) Line Size

Reference
- Suc. : Velocity : 1.2 ~ 2.4 m/s, ΔP/100m : 0.23 kg/cm2
- Disch. : Velocity : 2.4 ~ 3.0 m/s, ΔP/100m : 0.92 kg/cm2

PATH2 Calculation :
-> No problem

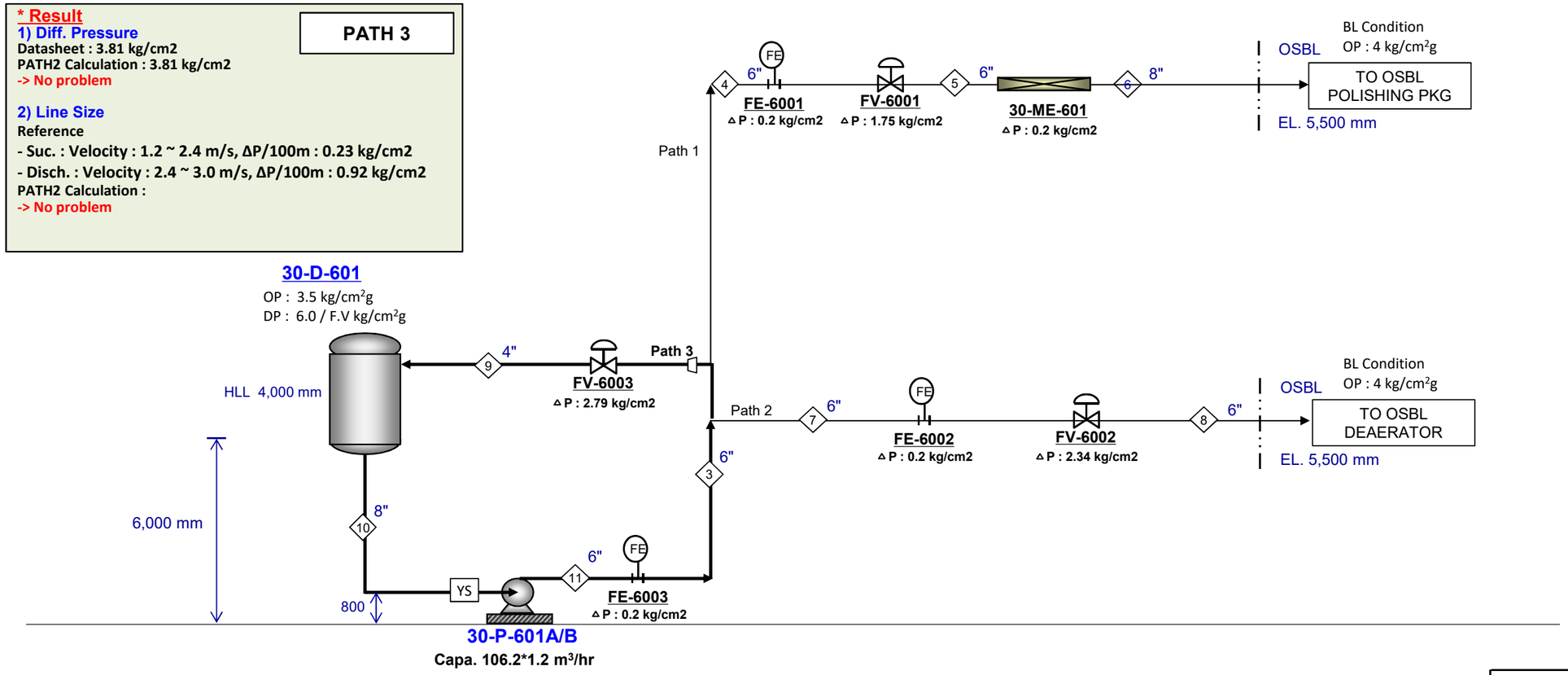

NOTE : 1. Assumed Data as below.
- Strainer △P = 0.07 kg/cm2
- Flowmeter △P = 0.2 kg/cm2

CV Input Data		
Item No.		
Des. Cap.		
Density		
D.P		
Char.		

PUMP CALCULATION		
ITEM NUMBER	**30-P-601A/B**	
SUCTION		
Flow Rate	132.4	m3/hr
Operating Pres.	3.5	kg/cm².G
Design Pres.	6	kg/cm².G
Min. Static Head	6	meter
Max. Static Head	10	meter
Pump Shaft Level	0.8	meter
Vapor Pres.	4.533	kg/cm².A
Allowance	0	meter
Pipe Friction Loss	0.004	kg/cm²
Strainer	0.07	kg/cm²
Others		kg/cm²
Net Suction Pres.	3.90	kg/cm².G
Max. Suction Pres.	6.85	kg/cm².G
NPSH Available	4.40	meter
DISCHARGE		
Operating Pres.	3.5	kg/cm².G
Max. Static Head	12.5	meter
Pipe friction Loss	0.153	kg/cm².G
Pipe Gravity Loss	1.075	kg/cm³.G
Equip. Pres. Drop	0.2	kg/cm².G
Control Valves	2.8	kg/cm².G
Others		kg/cm².G
Disch. Press. Req'd	7.72	kg/cm².G
Diff. Pres.	3.81	kg/cm²
Diff. Head (Net)	41.5	meter
Hydr. Horsepower	6.8	KW
Est. Efficieny		%
Est. BHP		KW
Est. Shut-off Pres.	11.61	kg/cm².G
C.V dp / Friction	791.09	%

CONTROL VALVES			
ITEM NO.	CAL. CV	RTD CV	% OPEN

		SUCTION			DISCHARGE																	
STREAM ID	UNIT	10			11	FE-6003	FV-6003	9														
Design Case																						
Phase		LIQUID			LIQUID			LIQUID														
Vapor Fraction																						
Normal Flow Rate	kg/hr	59,709			59,727			59,727														
Over Design	%	0			0			0														
Rated Flow Rate	kg/hr	59,709			59,727			59,727														
Temperature	°C	148.0			148.0			148.0														
Pressure @Inlet	kg/cm²G	3.50			7.72	7.70	7.50	4.71														
Pressure @Destination	kg/cm²G	3.90			7.70	7.50	4.71	3.50														
Line Size	inch	8			6			4														
Equivalent Length	M	32.5			38.3			36.4														
Elevation Change	M	-5.2			0.0			11.7														
Fluid, Density	kg/m³	918.6			918.9			918.9														
Fluid, Viscosity	cP	0.184			0.184			0.184														
Velocity	m/sec	0.56			0.97			2.20														
Pres. Drop by Friction	kg/cm²	0.004			0.017	0.000	0.000	0.135														
Pres. Drop by Gravity	kg/cm²	-0.478			0.000	0.000	0.000	1.075														
Pressure Drop / 100 M	kg/cm²	0.011			0.045			0.372														
Equipment Pres. Drop	kg/cm²	0.07				0.20																
CV PRESSURE DROP	kg/cm²						2.79															

LINE IDENTIFICATION		1	2	3	4	5	6	7	8	9	10	11	12	13	14	15	16	17
SIMU. STREAM ID					Path 1			Path 2										
SERVICE					Pump DS			Pump DS		PUMP MIN. FLOW								
TYPE OF FLOW	(L/V/2PH)	LIQUID	LIQUID	LIQUID	LIQUID	LIQUID	LIQUID	LIQUID	LIQUID	LIQUID	LIQUID	LIQUID						
OPERATING CONDITION																		
Temperature	C	148	148	148	148	148	128	148	148	148	148	148						
Pressure @up	Kg/cm2.G																	
Pressure @down	Kg/cm2.G	0.46	-0.03	-0.04	-0.01	-1.69	0.96	-0.04	-0.85	-1.21	0.47	-0.02						
PIPING INFORMATION																		
Nominal Size	inch	8.0	6.0	6.0	6.0	6.0	8.0	6.0	6.0	4.0	8.0	6.0						
Schedule or Class	-	40	40	40	40	40	40	40	40	40	40	40						
Line length,straight	m	25.0	10.0	15.0	5.0	40.0	150.0	15.0	150.0	25.0	25.0	25.0						
Eqivalent Length Over Design Factor	-	0.25	0.50	0.50	0.50	0.50	0.50	0.5	0.50	0.50	0.25	0.50						
Net Elevation Change	m	(5.2)	0.0	0.0	0.0	17.2	(12.5)	0.0	4.7	11.7	(5.2)	0.0						
Equivalent Length	m	32.5	15.3	23.0	7.7	61.3	239.8	23.0	229.9	36.4	32.5	38.3						
Pipe inside Dia.	m	0.203	0.154	0.154	0.154	0.154	0.203	0.154	0.154	0.102	0.203	0.154						
Wall Roughness	mm	0.046	0.046	0.046	0.046	0.046	0.046	0.046	0.046	0.046	0.046	0.046						
LIQUID PHASE CALCULATION																		
Flow Rate	Kg/h	101,373	101,373	101,373	101,373	101,373	175,544	101,373	101,373	59,727	59,709	59,727						
Flow Rate Design Margin	%	20	20	20	20	20		20	20	0	0	0						
Density @PT	Kg/m3	918.6	918.9	918.9	918.9	918.7	937.3	918.9	918.7	918.9	918.6	918.9						
Viscosity @PT	cP	0.184	0.184	0.184	0.184	0.184	0.216	0.184	0.184	0.184	0.184	0.184						
Surface Tension	dyn/cm																	
Flow Rate, rated	kg/h	121,648	121,648	121,648	121,648	121,648	175,544	121,648	121,648	59,727	59,709	59,727						
Vol. Flow	m3/hr	132.4	132.4	132.4	132.4	132.4	187.3	132.4	132.4	65.0	65.0	65.0						
Velocity	m/s	1.14	1.97	1.97	1.97	1.97	1.61	1.97	1.97	2.20	0.56	0.97						
Reynolds No	-	1.16E+06	1.52E+06	1.52E+06	1.52E+06	1.52E+06	1.42E+06	1.52E+06	1.52E+06	1.12E+06	5.67E+05	7.46E+05						
Friction Factor	-	0.0148	0.0154	0.0154	0.0154	0.0154	0.0147	0.0154	0.0154	0.0168	0.0155	0.0159						
Press. @Out	Kg/cm2.G	0.463	-0.028	-0.042	-0.014	-1.692	0.955	-0.042	-0.852	-1.210	0.474	-0.017						
Pressure Drop by Friction	Kg/cm2	0.0145	0.028	0.042	0.014	0.112	0.216	0.042	0.420	0.135	0.004	0.017						
Pressure Drop by Gravity	Kg/cm2	-0.478	0.000	0.000	0.000	1.580	-1.172	0.000	0.432	1.075	-0.478	0.000						
Dp / 100 m (by friction)	Kg/cm2	0.0446	0.1825	0.1825	0.1825	0.1826	0.0902	0.1825	0.1826	0.3720	0.0112	0.0453						
VAPOR PHASE CALCULATION																		
Flow Rate,max op	Kg/h																	
Flow Rate Design Margin	%																	
Density @PT	Kg/m3																	
or MW	(-)																	
Compr. Z	(-)																	
Viscosity @PT	cP																	
Flow Rate,rated	Kg/h																	
Vol. Flow @in	m3/sec																	
Gas Density @in	Kg/m3																	
Velocity @in	m/s																	
Reynolds No	-																	
Friction Factor	-																	
Gas Dns @Out	Kg/m3																	
Velocity @Out	m/s																	
Mach no. @Out	-																	
Press. @Out	Kg/cm2.G																	
Pressure Drop by Friction	Kg/cm2																	
Pressure Drop by Gravity	Kg/cm2																	
Dp / 100 m (by friction)	Kg/cm2																	

30-P-701A/B

LOTTE E&C 롯데건설주식회사

JOB NO.		PREPD BY:	J.H.Kim	DATE:	Sep. 26 '22
SERVICE	Solvent Sump Pump	CHKD BY:	J.H.Myung	APPD BY:	J.Y.Kim

PAGE: 1 / 1 △0

PUMP CALCULATION

ITEM NUMBER	`30-P-701A/B	
SUCTION		
Flow Rate	20.0	m3/hr
Operating Pres.	0.2	kg/cm^2.G
Design Pres.	3.5	kg/cm^2.G
Min. Static Head	-5	meter
Max. Static Head	-3.6	meter
Pump Shaft Level	-5	meter
Vapor Pres.	0.0	kg/cm^2.A
Allowance	0	meter
Pipe Friction Loss	0.000	kg/cm^2
Strainer	0	kg/cm^2
Others		kg/cm^2
Net Suction Pres.	0.20	kg/cm^2.G
Max. Suction Pres.	3.66	kg/cm^2.G
NPSH Available	10.67	meter
DISCHARGE		
Operating Pres.	0.015	kg/cm^2.G
Max. Static Head	11.2	meter
Pipe friction Loss	0.047	kg/cm^2.G
Pipe Gravity Loss	1.972	kg/cm$^{3.G}$
Equip. Pres. Drop	2.0	kg/cm^2.G
Control Valves	0.0	kg/cm^2.G
Others	0.21	kg/cm^2.G
Disch. Press. Req'd	4.24	kg/cm^2.G
Diff. Pres.	4.04	kg/cm^2
Diff. Head (Net)	35	meter
Hydr. Horsepower	2.2	KW
Est. Efficieny		%
Est. BHP		KW
Est. Shut-off Pres.	8.72	kg/cm^2.G
C.V dp / Friction	0.00	%

CONTROL VALVES

ITEM NO.	CAL. CV	RTD CV	% OPEN

*** Result**

1) Diff. Pressure

Datasheet : 4.04 kg/cm2

Calculation : 4.04 kg/cm2

-> No problem

2) Line Size

Referece

- Suc. : Velocity : 1.2 ~ 2.4 m/s, ΔP/100m : 0.23 kg/cm2

- Disch. : Velocity : 1.8 ~ 2.4 m/s, ΔP/100m : 0.92 kg/cm2

Calculation :

-> No problem

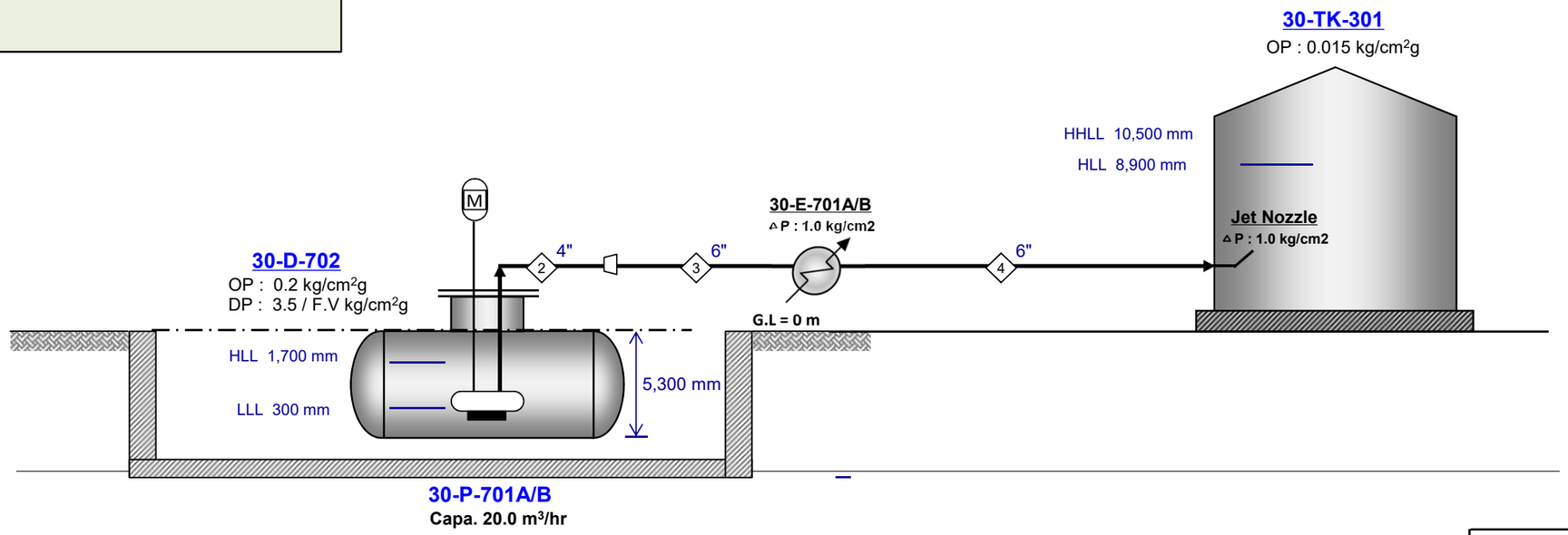

NOTE : 1. Assumed Data as below.
- Jet Nozzle △P = 1.0 kg/cm2
- Vapor Press. = 0.0 kg/cm2A (Specified Vapor Press. on Datasheet = Negligible)

CV Input Data		
Item No.		
Des. Cap.		
Density		
D.P		
Char.		

		SUCTION			DISCHARGE																	
STREAM ID	UNIT	1			2	3	30-E-701A/B	4	Jet Nozzle													
Design Case																						
Phase		LIQUID			LIQUID	LIQUID		LIQUID														
Vapor Fraction																						
Normal Flow Rate	kg/hr	23,102			23,102	23,102		23,102														
Over Design	%	0			0	0		0														
Rated Flow Rate	kg/hr	23,102			23,102	23,102		23,102														
Temperature	°C	150.0			150.0	150.0		40.0														
Pressure @Inlet	kg/cm^{2}G	0.20			4.24	3.66	3.66	2.66	1.23													
Pressure @Destination	kg/cm^{2}G	0.20			3.66	3.66	2.66	1.23	0.23													
Line Size	inch	4			4	6		6														
Equivalent Length	M	0.0			14.6	30.7		337.3														
Elevation Change	M	0.0			5.0	0.0		11.2														
Fluid, Density	kg/m^3	1,155.1			1,155.1	1,155.1		1,244.8														
Fluid, Viscosity	cP	1.37			1.37	1.37		7.43														
Velocity	m/sec	0.68			0.68	0.30		0.28														
Pres. Drop by Friction	kg/cm^2	0.000			0.008	0.002	0.000	0.036	0.000													
Pres. Drop by Gravity	kg/cm^2	0.000			0.578	0.000	0.000	1.394	0.000													
Pressure Drop / 100 M	kg/cm^2	0.058			0.058	0.008		0.011														
Equipment Pres. Drop	kg/cm^2						1.0		1.0													
CV PRESSURE DROP	kg/cm^2																					

LINE IDENTIFICATION		1	2	3	4	5	6	7	8	9	10	11	12	13	14	15	16	17
SIMU. STREAM ID																		
SERVICE																		
TYPE OF FLOW	(L/V/2PH)	LIQUID	LIQUID	LIQUID	LIQUID													
OPERATING CONDITION																		
Temperature	C	150	150	150	40													
Pressure @up	Kg/cm2.G																	
Pressure @down	Kg/cm2.G	0.00	-0.59	0.00	-1.43													
PIPING INFORMATION																		
Nominal Size	inch	4.0	4.0	6.0	6.0													
Schedule or Class	-	40	40	40	40													
Line length,straight	m	0.0	10.0	20.0	220.0													
Eqivalent Length Over Design Factor	-	0.00	0.50	0.50	0.50													
Net Elevation Change	m	0.0	5.0	0.0	11.2													
Equivalent Length	m	0.0	14.6	30.7	337.3													
Pipe inside Dia.	m	0.102	0.102	0.154	0.154													
Wall Roughness	mm	0.046	0.046	0.046	0.046													
LIQUID PHASE CALCULATION																		
Flow Rate	Kg/h	23,102	23,102	23,102	23,102													
Flow Rate Design Margin	%																	
Density @PT	Kg/m3	1155.1	1155.1	1155.1	1244.8													
Viscosity @PT	cP	1.370	1.370	1.370	7.428													
Surface Tension	dyn/cm																	
Flow Rate, rated	kg/h	23,102	23,102	23,102	23,102													
Vol. Flow	m3/hr	20.0	20.0	20.0	18.6													
Velocity	m/s	0.68	0.68	0.30	0.28													
Reynolds No	-	5.83E+04	5.83E+04	3.87E+04	7.14E+03													
Friction Factor	-	0.0218	0.0218	0.0230	0.0342													
Press. @Out	Kg/cm2.G	0.000	-0.586	-0.002	-1.431													
Pressure Drop by Friction	Kg/cm2	0.0000	0.008	0.002	0.036													
Pressure Drop by Gravity	Kg/cm2	0.000	0.578	0.000	1.394													
Dp / 100 m (by friction)	Kg/cm2	0.0575	0.0575	0.0078	0.0108													
VAPOR PHASE CALCULATION																		
Flow Rate,max op	Kg/h																	
Flow Rate Design Margin	%																	
Density @PT	Kg/m3																	
or MW	(-)																	
Compr. Z	(-)																	
Viscosity @PT	cP																	
Flow Rate,rated	Kg/h																	
Vol. Flow @in	m3/sec																	
Gas Density @in	Kg/m3																	
Velocity @in	m/s																	
Reynolds No	-																	
Friction Factor	-																	
Gas Dns @Out	Kg/m3																	
Velocity @Out	m/s																	
Mach no. @Out	-																	
Press. @Out	Kg/cm2.G																	
Pressure Drop by Friction	Kg/cm2																	
Pressure Drop by Gravity	Kg/cm2																	
Dp / 100 m (by friction)	Kg/cm2																	

30-P-702A/B

LOTTE E&C 롯데건설주식회사	JOB NO.		PREPD BY: J.H.Kim	DATE: Sep. 26 '22	PAGE: 1 / 2	0
	SERVICE	HC Slop Sump Pump	CHKD BY: J.H.Myung	APPD BY: J.Y.Kim	PUMP CALCULATION	

*** Result**

1) Diff. Pressure

Datasheet : 6.62 kg/cm2

Calculation : 4.48 kg/cm2

-> No problem

GOVERNING

2) Line Size

Referece

- Suc. : Velocity : 1.2 ~ 2.4 m/s, ΔP/100m : 0.23 kg/cm2

- Disch. : Velocity : 1.8 ~ 2.4 m/s, ΔP/100m : 0.92 kg/cm2

Calculation :

-> No problem

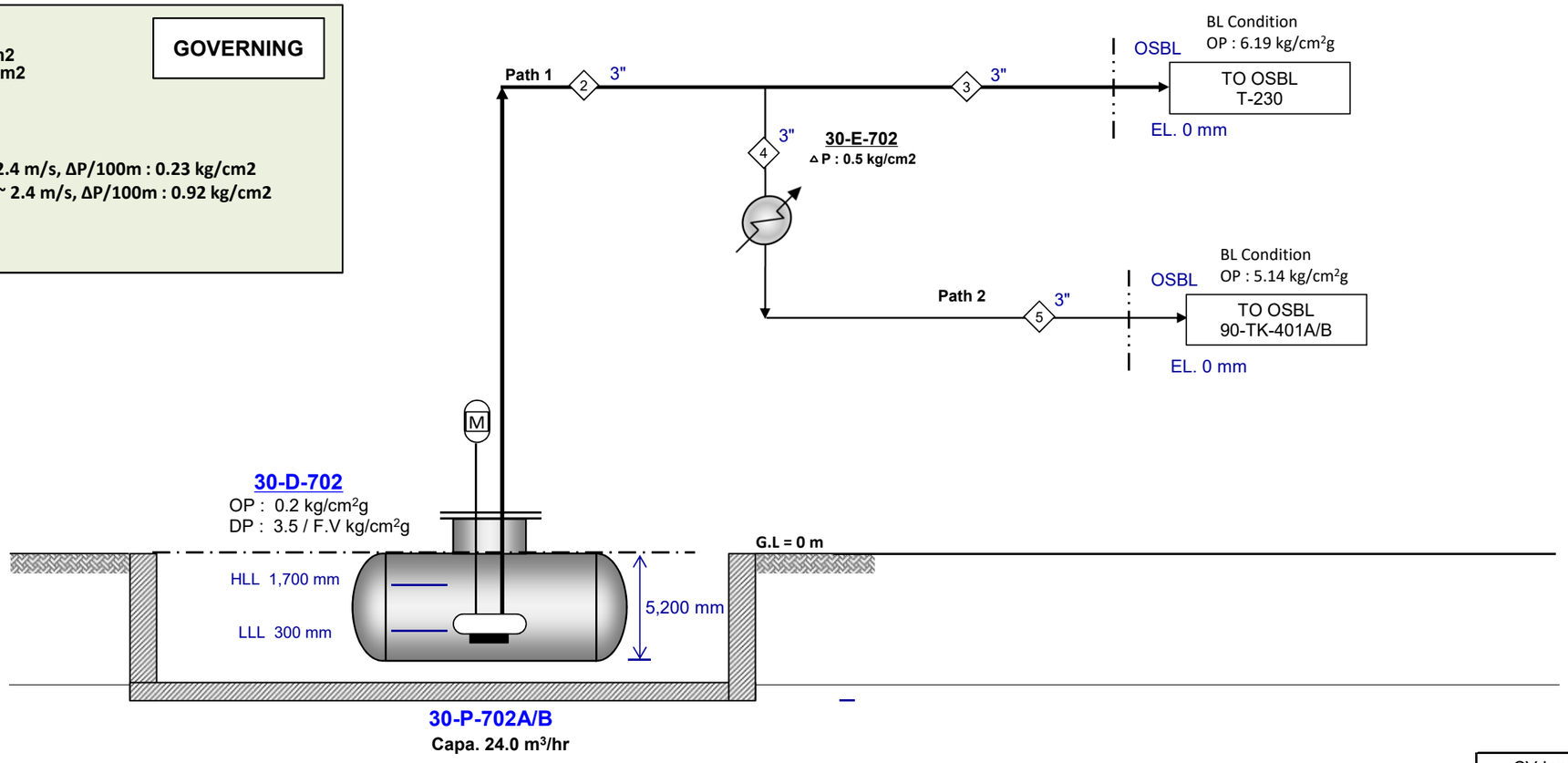

ITEM NUMBER	`30-P-702A/B	
SUCTION		
Flow Rate	24.0	m3/hr
Operating Pres.	0.2	kg/cm².G
Design Pres.	3.5	kg/cm².G
Min. Static Head	-4.9	meter
Max. Static Head	-3.5	meter
Pump Shaft Level	-4.9	meter
Vapor Pres.	0.86	kg/cm².A
Allowance	0	meter
Pipe Friction Loss	0.000	kg/cm²
Strainer	0	kg/cm²
Others		kg/cm²
Net Suction Pres.	0.20	kg/cm².G
Max. Suction Pres.	3.60	kg/cm².G
NPSH Available	5.02	meter
DISCHARGE	WP-1	
Operating Pres.	6.19	kg/cm².G
Max. Static Head	0.0	meter
Pipe friction Loss	0.276	kg/cm².G
Pipe Gravity Loss	0.364	kg/cm³.G
Equip. Pres. Drop	0.0	kg/cm².G
Control Valves	0.0	kg/cm².G
Others		kg/cm².G
Disch. Press. Req'd	6.83	kg/cm².G
Diff. Pres.	6.63	kg/cm²
Diff. Head (Net)	89	meter
Hydr. Horsepower	4.3	KW
Est. Efficieny		%
Est. BHP		KW
Est. Shut-off Pres.	11.89	kg/cm².G
C.V dp / Friction	0.00	%

NOTE : 1. Assumed Data as below.
- Flow rate D/S_24m3/h / 각 Branch 유량 동일하게 가정
- LLL 300mm / HLL 1,700mm 가정

CV Input Data		
Item No.		
Des. Cap.		
Density		
D.P		
Char.		

CONTROL VALVES

ITEM NO.	CAL. CV	RTD CV	% OPEN

		SUCTION			DISCHARGE																	
STREAM ID	UNIT	1			2	3																
Design Case																						
Phase		LIQUID			LIQUID	LIQUID																
Vapor Fraction																						
Normal Flow Rate	kg/hr	17,832			17,832	17,832																
Over Design	%	0			0	0																
Rated Flow Rate	kg/hr	17,832			17,832	17,832																
Temperature	°C	42.0			42.0	42.0																
Pressure @Inlet	kg/cm²G	0.20			6.83	6.44																
Pressure @Destination	kg/cm²G	0.20			6.44	6.19																
Line Size	inch	3			3	3																
Equivalent Length	M	0.0			14.1	140.9																
Elevation Change	M	0.0			4.9	0.0																
Fluid, Density	kg/m³	743.0			743.0	743.0																
Fluid, Viscosity	cP	0.28			0.28	0.28																
Velocity	m/sec	1.40			1.40	1.40																
Pres. Drop by Friction	kg/cm²	0.000			0.025	0.251																
Pres. Drop by Gravity	kg/cm²	0.000			0.364	0.000																
Pressure Drop / 100 M	kg/cm²	0.178			0.178	0.178																
Equipment Pres. Drop	kg/cm²																					
CV PRESSURE DROP	kg/cm²																					

LOTTE E&C 롯데건설주식회사	JOB NO.		PREPD BY:	J.H.Kim	DATE:	Sep. 26 '22	PAGE:	2 / 2	0
	SERVICE	HC Slop Sump Pump	CHKD BY:	J.H.Myung	APPD BY:	J.Y.Kim			

*** Result**

1) Diff. Pressure

Datasheet : 6.62 kg/cm2

Calculation : 6.63 kg/cm2

-> No problem

2) Line Size

Referece

- Suc. : Velocity : 1.2 ~ 2.4 m/s, ΔP/100m : 0.23 kg/cm2

- Disch. : Velocity : 1.8 ~ 2.4 m/s, ΔP/100m : 0.92 kg/cm2

Calculation :

-> No problem

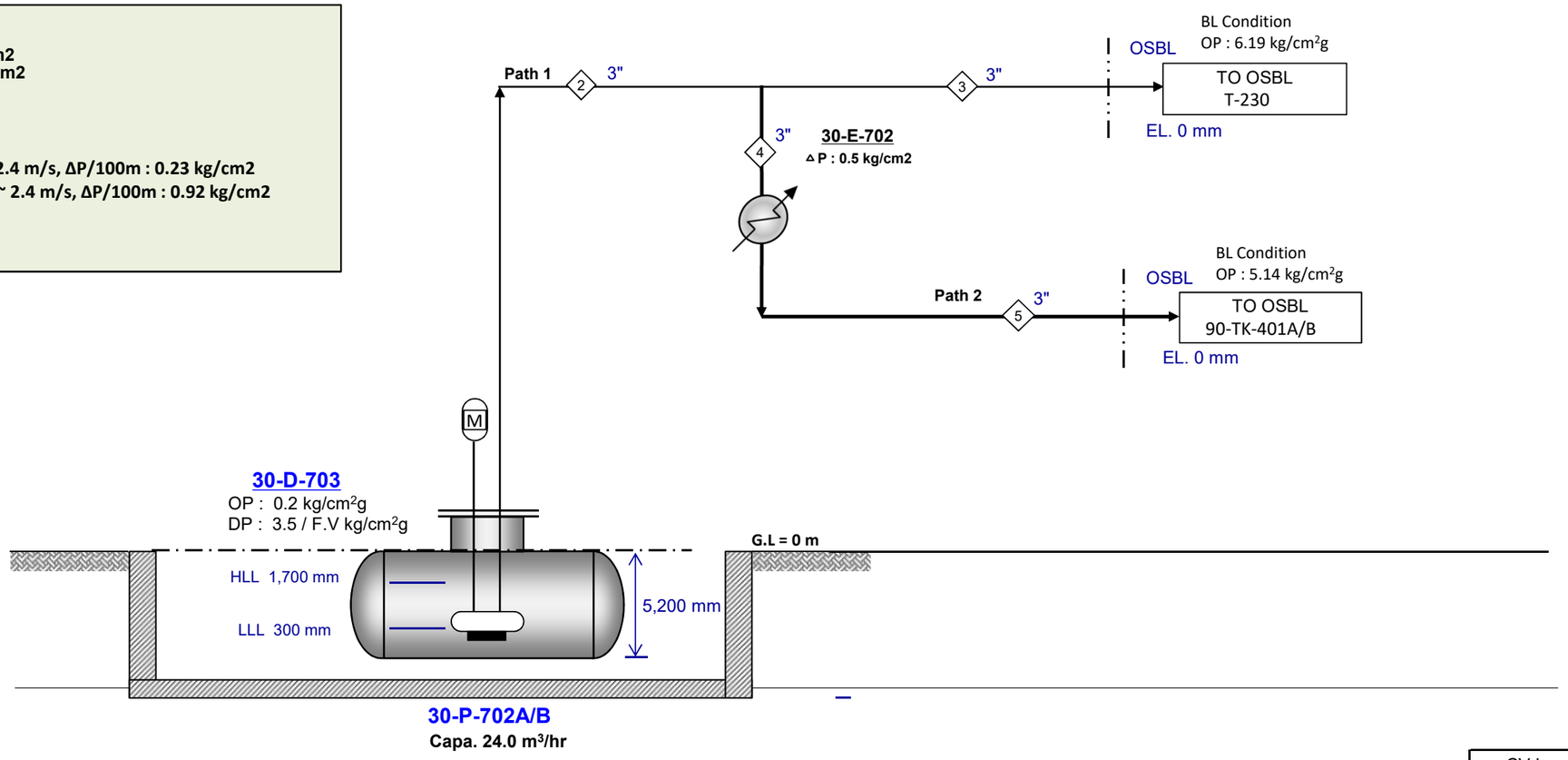

NOTE : 1. Assumed Data as below.
- Flow rate D/S_24m3/h / 각 Branch 유량 동일하게 가정
- LLL 300mm / HLL 1,700mm 가정
- 30-E-702 △P = 0.5 kg/cm2

CV Input Data		
Item No.		
Des. Cap.		
Density		
D.P		
Char.		

PUMP CALCULATION

ITEM NUMBER	`30-P-702A/B	
SUCTION		
Flow Rate	24.0	m3/hr
Operating Pres.	0.2	kg/cm2.G
Design Pres.	3.5	kg/cm2.G
Min. Static Head	-4.9	meter
Max. Static Head	-3.5	meter
Pump Shaft Level	-4.9	meter
Vapor Pres.	0.86	kg/cm2.A
Allowance	0	meter
Pipe Friction Loss	0.000	kg/cm2
Strainer	0	kg/cm2
Others		kg/cm2
Net Suction Pres.	0.20	kg/cm2.G
Max. Suction Pres.	3.60	kg/cm2.G
NPSH Available	5.02	meter
DISCHARGE	WP-5	
Operating Pres.	5.14	kg/cm2.G
Max. Static Head	0.0	meter
Pipe friction Loss	0.326	kg/cm2.G
Pipe Gravity Loss	0.364	kg/cm3.G
Equip. Pres. Drop	0.5	kg/cm2.G
Control Valves	0.0	kg/cm2.G
Others	0.5	kg/cm2.G
Disch. Press. Req'd	6.83	kg/cm2.G
Diff. Pres.	6.63	kg/cm2
Diff. Head (Net)	89	meter
Hydr. Horsepower	4.3	KW
Est. Efficieny		%
Est. BHP		KW
Est. Shut-off Pres.	11.89	kg/cm2.G
C.V dp / Friction	0.00	%

CONTROL VALVES

ITEM NO.	CAL. CV	RTD CV	% OPEN

		SUCTION			DISCHARGE																	
STREAM ID	UNIT	1			2	4	E-702	5														
Design Case																						
Phase		LIQUID			LIQUID	LIQUID		LIQUID														
Vapor Fraction																						
Normal Flow Rate	kg/hr	17,832			17,832	17,832		17,832														
Over Design	%	0			0	0		0														
Rated Flow Rate	kg/hr	17,832			17,832	17,832		17,832														
Temperature	°C	42.0			42.0	42.0		42.0														
Pressure @Inlet	kg/cm2G	0.20			6.83	6.44	6.42	5.92														
Pressure @Destination	kg/cm2G	0.20			6.44	6.42	5.92	5.64														
Line Size	inch	3			3	3		3														
Equivalent Length	M	0.0			14.1	14.1		154.9														
Elevation Change	M	0.0			4.9	0.0		0.0														
Fluid, Density	kg/m3	743.0			743.0	743.0		743.0														
Fluid, Viscosity	cP	0.28			0.28	0.28		0.28														
Velocity	m/sec	1.40			1.40	1.40		1.40														
Pres. Drop by Friction	kg/cm2	0.000			0.025	0.025	0.000	0.276														
Pres. Drop by Gravity	kg/cm2	0.000			0.364	0.000	0.000	0.000														
Pressure Drop / 100 M	kg/cm2	0.178			0.178	0.178		0.178														
Equipment Pres. Drop	kg/cm2						0.5															
CV PRESSURE DROP	kg/cm2																					

LINE IDENTIFICATION		1	2	3	4	5	6	7	8	9	10	11	12	13	14	15	16	17
SIMU. STREAM ID							Delete	Delete										
SERVICE																		
TYPE OF FLOW	(L/V/2PH)	LIQUID	LIQUID	LIQUID	LIQUID	LIQUID	LIQUID	LIQUID										
OPERATING CONDITION																		
Temperature	C	42	42	42	42	42	42	42										
Pressure @up	Kg/cm2.G																	
Pressure @down	Kg/cm2.G	0.00	-0.39	-0.25	-0.03	-0.28	-0.81	-0.66										
PIPING INFORMATION																		
Nominal Size	inch	3.0	3.0	3.0	3.0	3.0	3.0	3.0										
Schedule or Class	-	40	40	40	40	40	40	40										
Line length,straight	m	0.0	10.0	100.0	10.0	110.0	50.0	100.0										
Eqivalent Length Over Design Factor	-	0.00	0.50	0.50	0.50	0.50	0.50	0.50										
Net Elevation Change	m	0.0	4.9	0.0		0.0	9.3	5.5										
Equivalent Length	m	0.0	14.1	140.9	14.1	154.9	70.4	140.9										
Pipe inside Dia.	m	0.078	0.078	0.078	0.078	0.078	0.078	0.078										
Wall Roughness	mm	0.046	0.046	0.046	0.046	0.046	0.046	0.046										
LIQUID PHASE CALCULATION																		
Flow Rate	Kg/h	17,832	17,832	17,832	17,832	17,832	17,832	17,832										
Flow Rate Design Margin	%																	
Density @PT	Kg/m3	743.0	743.0	743.0	743.0	743.0	743.0	743.0										
Viscosity @PT	cP	0.280	0.280	0.280	0.280	0.280	0.280	0.280										
Surface Tension	dyn/cm																	
Flow Rate, rated	kg/h	17,832	17,832	17,832	17,832	17,832	17,832	17,832										
Vol. Flow	m3/hr	24.0	24.0	24.0	24.0	24.0	24.0	24.0										
Velocity	m/s	1.40	1.40	1.40	1.40	1.40	1.40	1.40										
Reynolds No	-	2.89E+05	2.89E+05	2.89E+05	2.89E+05	2.89E+05	2.89E+05	2.89E+05										
Friction Factor	-	0.0187	0.0187	0.0187	0.0187	0.0187	0.0187	0.0187										
Press. @Out	Kg/cm2.G	0.000	-0.389	-0.251	-0.025	-0.276	-0.813	-0.659										
Pressure Drop by Friction	Kg/cm2	0.0000	0.025	0.251	0.025	0.276	0.125	0.251										
Pressure Drop by Gravity	Kg/cm2	0.000	0.364	0.000	0.000	0.000	0.687	0.409										
Dp / 100 m (by friction)	Kg/cm2	0.1779	0.1780	0.1780	0.1780	0.1780	0.1780	0.1780										
VAPOR PHASE CALCULATION																		
Flow Rate,max op	Kg/h																	
Flow Rate Design Margin	%																	
Density @PT	Kg/m3																	
or MW	(-)																	
Compr. Z	(-)																	
Viscosity @PT	cP																	
Flow Rate,rated	Kg/h																	
Vol. Flow @in	m3/sec																	
Gas Density @in	Kg/m3																	
Velocity @in	m/s																	
Reynolds No	-																	
Friction Factor	-																	
Gas Dns @Out	Kg/m3																	
Velocity @Out	m/s																	
Mach no. @Out	-																	
Press. @Out	Kg/cm2.G																	
Pressure Drop by Friction	Kg/cm2																	
Pressure Drop by Gravity	Kg/cm2																	
Dp / 100 m (by friction)	Kg/cm2																	

30-P-704A/B

LOTTE E&C 롯데건설주식회사

JOB NO.		PREPD BY:	J.H.Kim	DATE:	Sep. 26 '22
SERVICE	OWS Sump Pump	CHKD BY:	J.H.Myung	APPD BY:	J.Y.Kim

PAGE: 1 / 1 (0)

*** Result**

1) Diff. Pressure
Datasheet : 4.96 kg/cm2
Calculation : 4.96 kg/cm2
-> No problem

2) Line Size
Referece
- Suc. : Velocity : 1.2 ~ 2.4 m/s, ΔP/100m : 0.23 kg/cm2
- Disch. : Velocity : 1.8 ~ 2.4 m/s, ΔP/100m : 0.92 kg/cm2
Calculation :
-> No problem

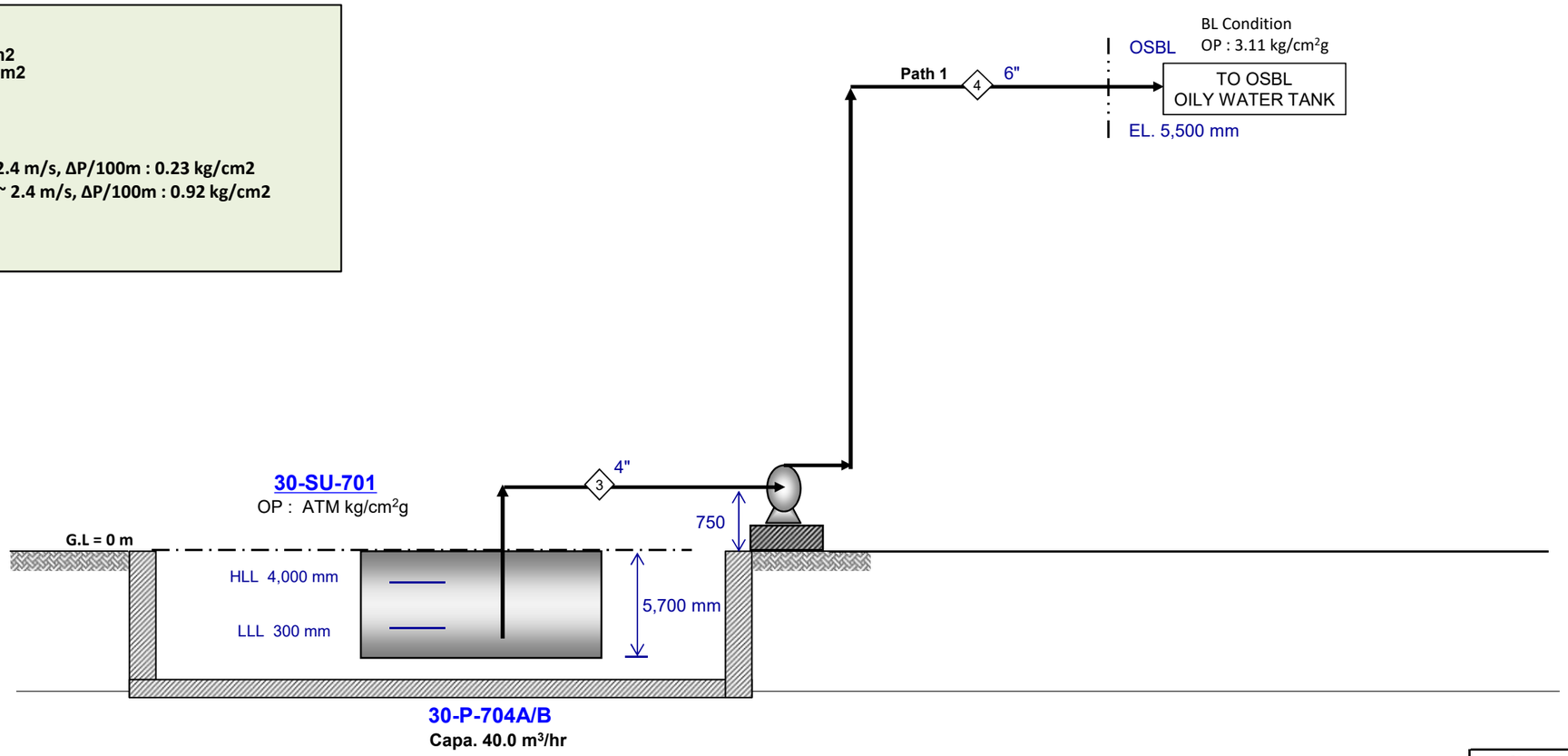

NOTE : 1. Assumed Data as below.
- Flow rate PID_40m3/h
- LLL 300mm / HLL 4,000mm 가정

	CV Input Data	
Item No.		
Des. Cap.		
Density		
D.P		
Char.		

PUMP CALCULATION

ITEM NUMBER	`30-P-704A/B	
SUCTION	SU-701	
Flow Rate	40.0	m3/hr
Operating Pres.	0.001	kg/cm2.G
Design Pres.	0.001	kg/cm2.G
Min. Static Head	-5.4	meter
Max. Static Head	-1.7	meter
Pump Shaft Level	0.75	meter
Vapor Pres.	0.067	kg/cm2.A
Allowance	0	meter
Pipe Friction Loss	0.018	kg/cm2
Strainer	0.07	kg/cm2
Others		kg/cm2
Net Suction Pres.	-0.70	kg/cm2.G
Max. Suction Pres.	-0.24	kg/cm2.G
NPSH Available	2.73	meter
DISCHARGE	B/L	
Operating Pres.	3.11	kg/cm2.G
Max. Static Head	5.5	meter
Pipe friction Loss	0.184	kg/cm2.G
Pipe Gravity Loss	0.470	kg/cm3.G
Equip. Pres. Drop	0.0	kg/cm2.G
Control Valves	0.0	kg/cm2.G
Others	0.5	kg/cm2.G
Disch. Press. Req'd	4.26	kg/cm2.G
Diff. Pres.	4.96	kg/cm2
Diff. Head (Net)	50	meter
Hydr. Horsepower	5.4	KW
Est. Efficieny		%
Est. BHP		KW
Est. Shut-off Pres.	5.96	kg/cm2.G
C.V dp / Friction	0.00	%

CONTROL VALVES

ITEM NO.	CAL. CV	RTD CV	% OPEN

		SUCTION			DISCHARGE																		
STREAM ID	UNIT	3			4																		
Design Case																							
Phase		LIQUID			LIQUID																		
Vapor Fraction																							
Normal Flow Rate	kg/hr	39,600			39,600																		
Over Design	%	0			100																		
Rated Flow Rate	kg/hr	39,600			79,200																		
Temperature	°C	38.0			38.0																		
Pressure @Inlet	kg/cm2G	0.00			4.26																		
Pressure @Destination	kg/cm2G	-0.66			3.61																		
Line Size	inch	4			6																		
Equivalent Length	M	10.8			229.9																		
Elevation Change	M	6.5			4.8																		
Fluid, Density	kg/m3	990.0			990.0																		
Fluid, Viscosity	cP	0.67			0.67																		
Velocity	m/sec	1.35			1.19																		
Pres. Drop by Friction	kg/cm2	0.018			0.184																		
Pres. Drop by Gravity	kg/cm2	0.639			0.470																		
Pressure Drop / 100 M	kg/cm2	0.167			0.080																		
Equipment Pres. Drop	kg/cm2																						
CV PRESSURE DROP	kg/cm2																						

LINE IDENTIFICATION		1	2	3	4	5	6	7	8	9	10	11	12	13	14	15	16	17
SIMU. STREAM ID		Delete	Delete															
SERVICE																		
TYPE OF FLOW	(L/V/2PH)	LIQUID	LIQUID	LIQUID	LIQUID													
OPERATING CONDITION																		
Temperature	C	38	38	38	38													
Pressure @up	Kg/cm2.G																	
Pressure @down	Kg/cm2.G	-0.65	-1.03	-0.66	-0.65													
PIPING INFORMATION																		
Nominal Size	inch	4.0	4.0	4.0	6.0													
Schedule or Class	-	40	40	40	40													
Line length,straight	m	7.5	150.0	7.5	150.0													
Eqivalent Length Over Design Factor	-	0.50	0.50	0.50	0.50													
Net Elevation Change	m	6.5	4.8	6.5	4.8													
Equivalent Length	m	10.8	218.3	10.8	229.9													
Pipe inside Dia.	m	0.102	0.102	0.102	0.154													
Wall Roughness	mm	0.046	0.046	0.046	0.046													
LIQUID PHASE CALCULATION																		
Flow Rate	Kg/h	24,750	24,750	39,600	39,600													
Flow Rate Design Margin	%	0	100	0	100													
Density @PT	Kg/m3	990.0	990.0	990.0	990.0													
Viscosity @PT	cP	0.670	0.670	0.670	0.670													
Surface Tension	dyn/cm																	
Flow Rate, rated	kg/h	24,750	49,500	39,600	79,200													
Vol. Flow	m3/hr	25.0	50.0	40.0	80.0													
Velocity	m/s	0.85	1.69	1.35	1.19													
Reynolds No	-	1.28E+05	2.56E+05	2.04E+05	2.71E+05													
Friction Factor	-	0.0195	0.0182	0.0185	0.0171													
Press. @Out	Kg/cm2.G	-0.646	-1.030	-0.657	-0.654													
Pressure Drop by Friction	Kg/cm2	0.0075	0.559	0.018	0.184													
Pressure Drop by Gravity	Kg/cm2	0.639	0.470	0.639	0.470													
Dp / 100 m (by friction)	Kg/cm2	0.0688	0.2563	0.1673	0.0798													
VAPOR PHASE CALCULATION																		
Flow Rate,max op	Kg/h																	
Flow Rate Design Margin	%																	
Density @PT	Kg/m3																	
or MW	(-)																	
Compr. Z	(-)																	
Viscosity @PT	cP																	
Flow Rate,rated	Kg/h																	
Vol. Flow @in	m3/sec																	
Gas Density @in	Kg/m3																	
Velocity @in	m/s																	
Reynolds No	-																	
Friction Factor	-																	
Gas Dns @Out	Kg/m3																	
Velocity @Out	m/s																	
Mach no. @Out	-																	
Press. @Out	Kg/cm2.G																	
Pressure Drop by Friction	Kg/cm2																	
Pressure Drop by Gravity	Kg/cm2																	
Dp / 100 m (by friction)	Kg/cm2																	