PT LOTTE CHEMICAL INDONESIA	CALCULATION SHEET	LOTTE E&C

Project Name :

LINE Project

Site Location :

Cilegon, Indonesia

Document Title :

HYDRAULIC CALCULATIONS (WP5)

Document No. :

LINE-900-BC-4-0001

Client's Contract No. : Later

LEC's Job No. : 15005

3	14-Jun-2024	Issued For Construction	J.H.JUNG	S.K.PARK	C.M.BAE
2	07-Mar-2024	Issued For Construction	J.H.JUNG	S.K.PARK	C.M.BAE
1	06-Feb-2023	Issued For Construction	J.H.JUNG	S.K.PARK	C.M.BAE
0	30-Jun-2022	Issued For Construction	J.H.JUNG	S.K.PARK	C.M.BAE
A	07-Apr-2022	Issued For Construction	J.H.JUNG	S.K.PARK	C.M.BAE
Rev	Date	Description	Prepared	Reviewed	Approved

LIST OF REVISION DESCRIPTION

Rev. No.	Rev. Date	Revised Page	Description	Remarks
A	07-Apr-2022	-	Issued For Review	First Issue
0	30-Jun-2022	All	Issued For Construction	
1	06-Feb-2023	All	Issued For Construction (Reflect OWNER's Comments)	
2	07-Mar-2024	All	Issued For Construction (Reflect OWNER's Comments)	
3	14-Jun-2024	All	Issued For Construction (Reflect OWNER's Comments)	

INDEX

1. CALCULATION BASIS

2. LINE SIZE GUIDELINES

3. LINE HYDRAULIC CALCULATIONS (WP5)

3.1 RUNDOWN TO TANK
3.2 COOL DOWN
3.3 COMPRESSOR CIRCUIT
3.4 REFRIGERANT
3.5 VENT FROM TANK
3.6 OTHER LINES
3.7 TWO PHASE LINES
3.8 UTILITIES

4. PUMP HYDRAULIC CALCULATIONS (WP5)

90-P-101A/B/C/D/E	NAPHTHA FEED PUMPS
90-P-121A/B	NAPHTHA TRANSFER PUMPS
90-P-141A/B	NAPHTHA DRAIN PUMPS
90-P-150A/B	OWS PUMPS FOR NAPHTHA TANK AREA
90-P-201A/B/C	C3 LPG FEED PUMPS
90-P-202A/B	C3 LPG FUEL PUMPS
90-P-203A/B/C	C3/C4 LPG FEED PUMPS
90-P-204A/B	C4 LPG BOG CONDENSATE PUMPS
90-P-215A/B	LP ETHYLENE EXPORT PUMPS
90-P-218A/B	LP PROPYLENE EXPORT PUMPS
90-P-225A/B	LP ETHYLENE TRANSFER PUMPS
90-P-228A/B	LP PROPYLENE TRANSFER PUMPS
90-P-240A/B	LP STEAM CONDENSATE PUMPS
90-P-260A/B	SANITARY PUMPS FOR OPERATOR SHELTER
90-P-301A/B/C	HP ETHYLENE FEED PUMPS
90-P-302A/B	HP PROPYLENE FEED PUMPS
90-P-303A/B	MIXED C4 FEED PUMPS
90-P-312A/B	HP PROPYLENE EXPORT PUMPS
90-P-313A/B	MIXED C4 EXPORT PUMPS
90-P-314A/B	BUTADIENE EXPORT PUMPS
90-P-315A/B	C4 RAFFINATE EXPORT PUMPS
90-P-331A/B	OFF-SPEC ETHYLENE RETURN PUMPS
90-P-332A/B	OFF-SPEC PROPYLENE RETURN PUMPS
90-P-341A/B	HP ETHYLENE HEATER CONDENSATE PUMPS
90-P-344A/B	BUTADIENE CIRCULATION PUMPS
90-P-350	OWS PUMPS FOR SPHERE TANK AREA
90-P-401A/B/C	RPG FEED PUMPS
90-P-412	C5 EXPORT PUMP
90-P-414A/B	GC5C6 EXPORT PUMPS
90-P-415A/B	BENZENE EXPORT PUMPS
90-P-416A/B	TOLUENE EXPORT PUMPS
90-P-417A/B	C8 AROMATICS EXPORT PUMPS
90-P-418A/B	C9+ EXPORT PUMPS
90-P-422A/B	C5 TRANSFER PUMPS
90-P-423A/B/C	NON AROMATIC TRANSFER PUMPS
90-P-428A/B	C9+ TRANSFER PUMPS
90-P-429A/B	PFO TRANSFER PUMPS
90-P-441	RPG DRAIN PUMP
90-P-442	C9+/PFO DRAIN PUMP
90-P-450A/B	OWS PUMPS FOR ATM TANK AREA
90-P-451	OWS PUMPS FOR TRUCK LOADING AREA

1. CALCULATION BASIS

(1) PUMP CIRCUIT LINES WITH PUMP MIN. FLOW LINE ARE INCLUDED IN PUMP HYDRAULIC SECTION.

(2) IMPORT AND VAPOR RETURN LINES FROM JETTY ARE INCLUDED IN LINE-900-BC-4-7001, HYDRAULIC CALCULATIONS (WP7).

(3) UTILITY DATA FOR VENDOR PACKAGE TO BE DETERMINED AFTER VENDOR SELECTED.

(4) DESIGN MARGIN APPLIED 10% ACCORDING TO PROJECT DESIGN PHILOSOPHY, LINE-000-ZA-4-1001, SECTION 1.3.2., OTHERWISE SPECIFIED.

(5) LINE SIZE HAS BEEN REVIEWED ACCORDING TO THE LOTTE E&C LINE SIZING GUIDELINES. OTHERWISE SPECIFIED.

(6) LINE LENGTH IS INPUT AS 100M, OTHERWISE SPECIFIED IF PRESSURE PROFILE IS REQUIRED,

2. LINE SIZING GUIDELINES

2.1 LIQUID LINES

	Type of Service	Velocity m/sec	Maximum △P kg/cm2/100m
1	General Recommendation	1.5 ~ 4.6	0.92
2	Pump Suction		
	Boiling Liquid	0.6 ~ 1.8	0.12
	Non-boiling Liquid	1.2 ~ 2.4	0.23
3	Pump Discharge, m3/hr		
	0 ~ 57	1.8 ~ 2.4	1.38
	57 ~ 159	2.4 ~ 3.0	0.92
	159<	3.0 ~ 4.6	0.46
4	Bottoms Outlet	1.2 ~ 2.4	0.14
5	Reboiler Trap-out	0.3 ~ 1.2	0.035
6	Liquid from Condensers	0.9 ~ 1.8	0.12
7	Liquid to Chillers	1.2 ~ 18	-
8	Refrigerant Lines	0.6 ~ 1.2	0.09
9	Gravity Run Lines	0.9 ~ 2.4	0.09
10	Liquid Feed to Towers	1.2 ~ 1.8	-

2.2 WATER LINES

	Type of Service	Velocity m/sec	Maximum △P kg/cm2/100m
1	General Service, Diameter, inches	0.6 ~ 4.8	0.46
	1	0.6 ~ 0.9	-
	2	0.9 ~ 1.4	-
	4	1.5 ~ 2.1	-
	6	2.1 ~ 2.7	-
	8	2.4 ~ 3.0	-
	10	3.0 ~ 3.7	-
	12	3.0 ~ 4.3	-
	16	3.0 ~ 4.6	-
	20 and up	3.0 ~ 4.8	-
2	Pump Suction & Drain	1.2 ~ 2.1	-
3	Pump Discharge	1.5 ~ 3.0	-
4	Boiler Feed	2.4 ~ 4.6	-
5	Refinery Water Lines	0.6 ~ 1.5	0.58
6	Cooling Water	3.7 ~ 4.8	0.46
7	From Condenser	0.9 ~ 1.5	-

2.3 SPECIAL LIQUID LINES

Type of Service	Velocity m/sec	Maximum △P kg/cm2/100m
1 Carbon Steel Pipe Carrying		
Phenolic Water	0.9	-
Concentrated Sulfuric Acid	1.2	-
Salt Water	1.8	-
Caustic Solution	1.2	-
2 Stainless Steel Pipe Carrying		
CO2-rich amine liquid	3.0	-
3 Cement Pipe or Coal Tar Enamel-lined Pipe Carrying		
Salt Water	4.6	-
4 Plastic Pipe or Rubber-lined Pipe Carrying		
Liquids in general	3.0	-
Liquids w/ suspended solids	0.9 (Min.Velocity)	-

2.4 VAPOR LINES

Type of Service	Velocity m/sec	Maximum △P kg/cm2/100m
1 General Recommendation		
Pressure Level, kg/cm2g		
P > 35.2	-	0.46
14.1 < P ≤ 35.2	-	0.35
10.5 < P ≤ 14.1	-	0.14
3.5 < P ≤ 10.5	-	0.07
0.0 < P ≤ 3.5	-	0.035
Sub atmospheric	-	0.023
2 Gas Lines within Battery Limits	-	0.12
3 Compressor Piping Suction	-	0.12
4 Compressor Piping Discharge	-	0.23
5 Refrigerant Suction Lines	4.6 ~ 10.7	-
6 Refrigerant Discharge Lines	10.7 ~ 18.3	-
7 Tower Overhead		(Not applicable for WP5/7)

2.5 STEAM LINES

Type of Service	Velocity m/sec	Maximum △P kg/cm2/100m
1 General Recommendation		
Maximum : Saturated	61.0	-
Superheated	76.2	-
Steam Pressure in kg/cm2g		
0 < P ≤ 3.5	-	0.06
3.5 < P ≤ 10.5	-	0.12
10.5 < P ≤ 21.1	-	0.23
P > 21.1	-	0.38
2 High Pressure Steam Lines		(Not applicable for WP5/7)
3 Exhaust Steam Lines (P>1atm)		(Not applicable for WP5/7)
4 Feed Lines to Pumps and Reciprocating Engines		(Not applicable for WP5/7)
5 Power House Equipment and Process Piping		(Not applicable for WP5/7)
6 Boiler and Turbine Leads		(Not applicable for WP5/7)

2.6 TWO PHASE LINES

(1) IF LIQUID VOLUME FRACTION IS UNDER 0.001, IT IS NOT CONSIDERED AS TWO PHASE FLOW.

(2) HOMOGENEOUS VELOCITY IS NOT TO BE OVER THE EROSIONAL VELOCITY.

PT LOTTE CHEMICAL INDONESIA

LINE HYDRAULIC CALCULATION SHEET (LINE WP5)

LOTTE E&C

1	PROJECT :	LINE PROJECT				JOB NO. :	15005				REVISION
2	CLIENT :	PT LOTTE CHEMICAL INDONESIA				DOCU. NO. :	LINE-900-BC-4-0001				
3	LOCATION :	CILEGON, INDONESIA				P&ID NO. :	REFER TO ROW NO. 10				
4	UNIT :	**WP5**				CASE :	DESIGN				
5	SERVICE :	**3.1 RUNDOWN TO TANK**				SHEET :	1 OF 4 (RUNDOWN TO TANK)				
6	**Item**		**LP EL**		**LP EL**		**LP EL**	**LP PL**			
7	Line No		EL-2000	EL-2023	EL-2000	EL-2002	EL-2003	PL-2000			
8		**From**	**NCC (WP5 BL)**	**RED 8"x12"**	**NCC (WP5 BL)**	**RED 8"x6"**	**LCTN (WP5 BL)**	**NCC (WP5 BL)**			
9		**To**	**RED 8"x12"**	**TK-205**	**RED 8"x6"**	**LCTN (WP5 BL)**	**TK-205**	**TK-208**			
10		P&ID No.	902-0008	902-0008	902-0008	902-0008	902-0008	902-0012			
11		Piping Material Class	3S0Y	1S0Y	3S0Y	3S0Y	3S0Y	3L1P			
12		Pipe Schedule	40S	10S	40S	40S	40S	40			
13		Pipe Roughness (mm)	0.015	0.015	0.015	0.015	0.015	0.046			
14		**Fluid**	**LP EL**	**LP EL**	**LP EL**	**LP EL**	**LP EL**	**LP PL**			
15	Calc Mode (L, Vu, Vd)		L	L	L	L	L	L			
16	Temperature	: T (C)	-98.0	-98.0	-98.0	-98.0	-102.9	-43.0			
17	Pressure	: P (kg/cm^2G)	16.21	0.11	16.21	16.20	1.96	15.00			
18	Density	@ T,P (kg/m^3)	558.1	558.1	558.1	558.1	566.0	603.2			
19	Molecular	@ T,P (-)									
20	Compress. Fact.	@ T,P (-)									
21	Viscosity	@ T,P (cP)	0.15	0.15	0.15	0.15	0.18	0.17			
22	C_P / C_V	@ T,P									
23	M/B Flow Rate	(kg/h)	68,750	128,390	68,750	68,750	111,000	72,305			
24	Excess Ratio	(-)	1.00	1.00	1.00	1.00	1.00	1.00			
25	Flow Rate	(kg/h)	68,750	128,390	68,750	68,750	111,000	72,305			
26	**Line Length**	(m)	**250**	**100**	**50**	**50**	**250**	**250**			
27	**Pipe Nominal Size**	(inch)	**8**	**12**	**8**	**6**	**6**	**6**			
28		**Calculation Result**	**OK**	**OK**	**OK**	**OK**	**OK**	**OK**			
29	Inlet Press.	(Input) (kg/cm^2G)	16.21	0.11	16.21	16.20	1.96	15.00			
30	Inlet Press.	(Calcul'd) (kg/cm^2G)	**16.21**	**0.11**	**16.21**	**16.20**	**1.96**	**15.00**			
31	Velocity	@ Inlet (m/sec)	1.06	0.82	1.06	1.84	2.92	1.79			
32	Reynolds No.	@ Inlet (-)	794338.77	955543.17	794338.77	1045299.29	1415778.70	970774.41			
33	d*V*V/2g	@ Inlet (kg/cm^2)	31.98	19.20	31.98	95.91	246.52	98.15			
34	4*F*L/D	@ Inlet (-)	16.49	4.03	3.30	4.33	21.16	25.42			
35	dP/100m	@ Inlet (kg/cm^2)	0.02	0.01	0.02	0.08	0.21	0.10			
36	Outlet Press.	(Input) (kg/cm^2G)									
37	Outlet Press.	(Calcul'd) (kg/cm^2G)	**0.11**	**0.10**	**16.20**	**16.15**	**0.10**	**0.10**			
38	**Velocity**	**@ Outlet (m/sec)**	**1.06**	**0.82**	**1.06**	**1.84**	**2.92**	**1.79**			
39		Limit	4.60	4.60	4.60	4.60	3.00	3.00			
40	Sonic Velocity	@ Outlet (m/sec)									
41	Mach No.	@ Outlet (-)									
42	Reynolds No.	@ Outlet (-)	794338.77	955543.17	794338.77	1045299.29	1415778.70	970774.41			
43	d*V*V/2g	@ Outlet (kg/cm^2)	31.98	19.20	31.98	95.91	246.52	98.15			
44	4*F*L/D	@ Outlet (-)	16.49	4.03	3.30	4.33	21.16	25.42			
45	**dP/100m**	**@ Outlet (kg/cm^2)**	**0.021**	**0.008**	**0.021**	**0.083**	**0.209**	**0.100**			
46		Limit	0.460	0.460	0.460	0.460	0.920	0.920			
47	**Straight Pipe dP**	(kg/cm^2)	**0.053**	**0.008**	**0.011**	**0.042**	**0.522**	**0.250**			
48	dP of Control Valve	(kg/cm^2)	14.4					13.1			
49	dP of Heat Exchanger	(kg/cm^2)									
50	dP of Column	(kg/cm^2)									
51	dP of Strainer	(kg/cm^2)									
52	dP of Orifice	(kg/cm^2)	0.2				0.2	0.2			
53	Other dP	(kg/cm^2)	0.16								
54	Static Head	(m)	23				20.03	22			
55		(kg/cm^2)	1.284				1.134	1.327			
56	**Equip dP**	(kg/cm^2)	**16.044**				**1.334**	**14.650**			
57	Pipe Entrance										
58	Pipe Exit										
59	90 Elbow										
60	Tee										
61	Globe Valve										
62	Gate Valve										
63	Check Valve										
64	Butterfly Valve										
65	Ball valve										
66	Contraction										
67	Enlargement										
68	Other's K										
69	**Sum (Ki)**										
70	**Fitting dP**	(kg/cm^2)									
71	**Total dP**	(kg/cm^2)	**16.096**	**0.008**	**0.011**	**0.042**	**1.855**	**14.900**			
72	**Remarks**										
73											
74			**DESIGN FLOWRATE FROM NCC**	**DESIGN FLOWRATE FROM NCC + COLD CIRCULATION + LCTN PUMP CAPACITY**	**DESIGN FLOWRATE FROM NCC**	**DESIGN FLOWRATE FROM NCC**	**LCTN PUMP CAPACITY (37000 x 3)**	**DESIGN FLOWRATE FROM NCC**			
75											
76											
77											

MAX TANK OP

PT LOTTE CHEMICAL INDONESIA

LINE HYDRAULIC CALCULATION SHEET (LINE WP5)

LOTTE E&C

1	PROJECT :	LINE PROJECT			JOB NO. :	15005				REVISION
2	CLIENT :	PT LOTTE CHEMICAL INDONESIA			DOCU. NO. :	LINE-900-BC-4-0001				
3	LOCATION :	CILEGON, INDONESIA			P&ID NO. :	REFER TO ROW NO. 10				
4	UNIT :	**WP5**			CASE :	DESIGN				
5	SERVICE :	**3.1 RUNDOWN TO TANK**			SHEET :	2 OF 4 (RUNDOWN TO TANK)				
6	**Item**	**HP EL**	**HP PL**	**OFF-SPEC. BD**	**MIXED C4**		**BD**	**C4 RAFF.**		
7	Line No	EL-3000	PL-3000	BMX-3041	BMX-3000	BMX-3000	BD-3010	BMX-3111		
8	**From**	**NCC (WP5 BL)**	**NCC (WP5 BL)**	**BD (WP5 BL)**	**NCC (WP5 BL)**	**RED 4"x8"**	**BD (WP5 BL)**	**BD (WP5 BL)**		
9	**To**	**TK-301A**	**TK-302A**	**TK-303A**	**RED 4"x8"**	**TK-303A**	**TK-304A**	**TK-305A**		
10	P&ID No.	903-0001	903-0003	903-0005	903-0005	903-0005	903-0007	903-0009		
11	Piping Material Class	3L1P	3L1P	1C1P	1C1P	1C1P	1C1P	1C1P		
12	Pipe Schedule	40	40	40	40	40	40	40		
13	Pipe Roughness (mm)	0.046	0.046	0.046	0.046	0.046	0.046	0.046		
14	**Fluid**	**HP EL**	**HP PL**	**OFF-SPEC. BD**	**MIXED C4**	**MIXED C4**	**BD**	**C4 RAFF.**		
15	Calc Mode (L, Vu, Vd)	L	L	L	L	L	L	L		
16	Temperature : T (C)	-30.3	46.4	35.0	39.9	39.9	35.0	42.8		
17	Pressure : P (kg/cm^2G)	21.11	19.73	5.12	5.71	3.61	2.84	5.49		
18	Density @ T,P (kg/m^3)	440.1	459.6	602.5	581.9	604.0	602.5	566.0		
19	Molecular @ T,P (-)									
20	Compress. Fact. @ T,P (-)									
21	Viscosity @ T,P (cP)	0.07	0.07	0.13	0.13	0.16	0.13	0.15		
22	C_P / C_V @ T,P									
23	M/B Flow Rate (kg/h)	69,219	55,805	21,319	50,705	50,705	21,319	27,280		
24	Excess Ratio (-)	1.00	1.00	1.00	1.00	1.00	1.00	1.00		
25	Flow Rate (kg/h)	69,219	55,805	21,319	50,705	50,705	21,319	27,280		
26	**Line Length** (m)	**200**	**150**	**150**	**150**	**100**	**200**	**200**		
27	**Pipe Nominal Size** (inch)	**8**	**6**	**6**	**4**	**8**	**4**	**4**		
28	**Calculation Result**	**OK**	**OK**	**OK**	**OK**	**OK**	**OK**	**OK**		
29	Inlet Press. (Input) (kg/cm^2G)	21.11	19.73	5.12	5.71	3.61	2.84	5.49		
30	Inlet Press. (Calcul'd) (kg/cm^2G)	**21.11**	**19.73**	**5.12**	**5.71**	**3.61**	**2.84**	**5.49**		
31	Velocity @ Inlet (m/sec)	1.35	1.81	0.53	2.95	0.72	1.20	1.63		
32	Reynolds No. @ Inlet (-)	1829748.46	1830296.83	376502.94	1318547.19	567063.78	567184.42	637504.81		
33	d*V*V/2g @ Inlet (kg/cm^2)	41.11	76.73	8.54	257.68	16.07	44.00	76.69		
34	4*F*L/D @ Inlet (-)	14.40	14.93	16.19	24.53	7.65	33.69	33.51		
35	dP/100m @ Inlet (kg/cm^2)	0.03	0.08	0.01	0.42	0.01	0.07	0.13		
36	Outlet Press. (Input) (kg/cm^2G)									
37	Outlet Press. (Calcul'd) (kg/cm^2G)	**19.90**	**18.40**	**3.60**	**3.61**	**3.60**	**0.44**	**3.80**	MAX TANK OP	
38	**Velocity @ Outlet (m/sec)**	**1.35**	**1.81**	**0.53**	**2.95**	**0.72**	**1.20**	**1.63**		
39	Limit	3.00	3.00	2.40	3.00	3.00	2.40	2.40		
40	Sonic Velocity @ Outlet (m/sec)									
41	Mach No. @ Outlet (-)									
42	Reynolds No. @ Outlet (-)	1829748.46	1830296.83	376502.94	1318547.19	567063.78	567184.42	637504.81		
43	d*V*V/2g @ Outlet (kg/cm^2)	41.11	76.73	8.54	257.68	16.07	44.00	76.69		
44	4*F*L/D @ Outlet (-)	14.40	14.93	16.19	24.53	7.65	33.69	33.51		
45	**dP/100m @ Outlet (kg/cm^2)**	**0.030**	**0.076**	**0.009**	**0.421**	**0.012**	**0.074**	**0.128**		
46	Limit	0.920	0.920	1.380	0.920	0.920	1.380	1.380		
47	**Straight Pipe dP** (kg/cm^2)	**0.059**	**0.115**	**0.014**	**0.632**	**0.012**	**0.148**	**0.257**		
48	dP of Control Valve (kg/cm^2)									
49	dP of Heat Exchanger (kg/cm^2)						0.7			
50	dP of Column (kg/cm^2)									
51	dP of Strainer (kg/cm^2)									
52	dP of Orifice (kg/cm^2)	0.2	0.2	0.2	0.2		0.24	0.2		
53	Other dP (kg/cm^2)									
54	Static Head (m)	21.7	22.2	21.7	21.7		21.7	21.7		
55	(kg/cm^2)	0.955	1.020	1.307	1.263		1.307	1.228		
56	**Equip dP** (kg/cm^2)	**1.155**	**1.220**	**1.507**	**1.463**		**2.247**	**1.428**		
57	Pipe Entrance									
58	Pipe Exit									
59	90 Elbow									
60	Tee									
61	Globe Valve									
62	Gate Valve									
63	Check Valve									
64	Butterfly Valve									
65	Ball valve									
66	Contraction									
67	Enlargement									
68	Other's K									
69	**Sum (Ki)**									
70	**Fitting dP** (kg/cm^2)									
71	**Total dP** (kg/cm^2)	**1.214**	**1.335**	**1.521**	**2.095**	**0.012**	**2.396**	**1.685**		
72	**Remarks**									
73										
74		**DESIGN FLOWRATE FROM NCC**	**DESIGN FLOWRATE FROM NCC**	**DESIGN FLOWRATE FROM BD**	**DESIGN FLOWRATE FROM NCC**	**DESIGN FLOWRATE FROM NCC**	**DESIGN FLOWRATE FROM BD**	**DESIGN FLOWRATE FROM BD**		
75										
76										
77										

PT LOTTE CHEMICAL INDONESIA

LINE HYDRAULIC CALCULATION SHEET (LINE WP5)

LOTTE E&C

1	PROJECT :	LINE PROJECT			JOB NO. :	15005				REVISION
2	CLIENT :	PT LOTTE CHEMICAL INDONESIA			DOCU. NO. :	LINE-900-BC-4-0001				
3	LOCATION :	CILEGON, INDONESIA			P&ID NO. :	REFER TO ROW NO. 10				
4	UNIT :	**WP5**			CASE :	DESIGN				
5	SERVICE :	**3.1 RUNDOWN TO TANK**			SHEET :	3 OF 4 (RUNDOWN TO TANK)				
6	**Item**		**SLOP OIL**	**RPG / QUENCH OIL**		**C5**	**NON ARO**	**BENZENE**	**TOLUENE**	**MIXED XYLENE**
7	Line No		HC-4000	RPG-4001		HC-4001	HC-4030	BZ-4001	TL-4001	XL-4001
8		**From**	**BTX (WP5 BL)**	**BTX (WP5 BL)**	**NCC (WP5 BL)**	**BTX (WP5 BL)**	**BTX (WP5 BL)**	**BTX (WP5 BL)**	**BTX (WP5 BL)**	**BTX (WP5 BL)**
9		**To**	**TK-401A**	**TK-401A**	**TK-401A**	**TK-402**	**TK-403**	**TK-405**	**TK-406**	**TK-407**
10		P&ID No.	904-0001	904-0001	904-0001	904-0002	904-0003	904-0005	904-0006	904-0007
11		Piping Material Class	1C1P	1C1P	1C1P	1C1P	1C1P	1C1P1	1C1P	1C1P
12		Pipe Schedule	40	40	40	40	40	40	40	40
13		Pipe Roughness (mm)	0.046	0.046	0.046	0.046	0.046	0.046	0.046	0.046
14		**Fluid**	**SLOP OIL**	**RPG**	**Q. WATER**	**C5**	**NON ARO**	**BENZENE**	**TOLUENE**	**MIXED XYLENE**
15	Calc Mode (L, Vu, Vd)		L	L	L	L	L	L	L	L
16	Temperature	: T (C)	42.0	40.0	40.0	50.0	44.0	39.7	40.0	40.3
17	Pressure	: P (kg/cm^2G)	2.41	1.66	1.77	3.14	1.48	2.36	1.78	3.17
18	Density	@ T,P (kg/m^3)	935.8	743.0	992.0	624.0	712.0	861.0	850.0	832.0
19	Molecular	@ T,P (-)								
20	Compress. Fact.	@ T,P (-)								
21	Viscosity	@ T,P (cP)	0.870	0.280	0.546	0.200	0.408	0.496	0.467	0.552
22	C_P / C_V	@ T,P								
23	M/B Flow Rate	(kg/h)	22,459	170,147	110,000	43,826	23,339	129,150	12,070	8,320
24	Excess Ratio	(-)	1.00	1.00	1.00	1.00	1.00	1.00	1.00	1.00
25	Flow Rate	(kg/h)	22,459	170,147	110,000	43,826	23,339	129,150	12,070	8,320
26	**Line Length**	(m)	**350**	**350**	**350**	**250**	**300**	**400**	**450**	**400**
27	**Pipe Nominal Size**	(inch)	**3**	**8**	**8**	**6**	**4**	**6**	**3**	**3**
28		**Calculation Result**	**OK**	**OK**	**OK**	**OK**	**OK**	**OK**	**OK**	**OK**
29	Inlet Press.	(Input) (kg/cm^2G)	2.41	1.66	1.77	3.14	1.48	2.36	1.78	3.17
30	Inlet Press.	(Calcul'd) (kg/cm^2G)	**2.41**	**1.66**	**1.77**	**3.14**	**1.48**	**2.36**	**1.78**	**3.17**
31	Velocity	@ Inlet (m/sec)	1.40	1.97	0.95	1.05	1.11	2.24	0.83	0.58
32	Reynolds No.	@ Inlet (-)	117159.35	1060171.85	351487.63	503086.63	197847.06	597802.37	117297.64	68404.74
33	d*V*V/2g	@ Inlet (kg/cm^2)	93.21	147.14	46.06	34.86	44.62	219.38	29.64	14.39
34	4*F*L/D	@ Inlet (-)	91.21	25.76	27.95	26.38	54.51	41.73	117.25	111.76
35	dP/100m	@ Inlet (kg/cm^2)	0.24	0.11	0.04	0.04	0.08	0.23	0.08	0.04
36	Outlet Press.	(Input) (kg/cm^2G)								
37	Outlet Press.	(Calcul'd) (kg/cm^2G)	**0.00**	**0.00**	**0.00**	**1.40**	**0.00**	**0.00**	**0.00**	**0.00**
38	**Velocity**	**@ Outlet (m/sec)**	**1.40**	**1.97**	**0.95**	**1.05**	**1.11**	**2.24**	**0.83**	**0.58**
39		Limit	2.40	4.60	3.00	3.00	2.40	2.40	2.40	2.40
40	Sonic Velocity	@ Outlet (m/sec)								
41	Mach No.	@ Outlet (-)								
42	Reynolds No.	@ Outlet (-)	117159.35	1060171.85	351487.63	503086.63	197847.06	597802.37	117297.64	68404.74
43	d*V*V/2g	@ Outlet (kg/cm^2)	93.21	147.14	46.06	34.86	44.62	219.38	29.64	14.39
44	4*F*L/D	@ Outlet (-)	91.21	25.76	27.95	26.38	54.51	41.73	117.25	111.76
45	**dP/100m**	**@ Outlet (kg/cm^2)**	**0.243**	**0.108**	**0.037**	**0.037**	**0.081**	**0.229**	**0.077**	**0.040**
46		Limit	1.380	0.460	0.920	0.920	1.380	1.380	1.380	1.380
47	**Straight Pipe dP**	(kg/cm^2)	**0.850**	**0.379**	**0.129**	**0.092**	**0.243**	**0.915**	**0.348**	**0.161**
48	dP of Control Valve	(kg/cm^2)								1.6
49	dP of Heat Exchanger	(kg/cm^2)								
50	dP of Column	(kg/cm^2)								
51	dP of Strainer	(kg/cm^2)								
52	dP of Orifice	(kg/cm^2)	0.2	0.2	0.2	0.2	0.2	0.2	0.2	0.2
53	Other dP	(kg/cm^2)								
54	Static Head	(m)	14.5	14.5	14.5	23.2	14.5	14.5	14.5	14.5
55		(kg/cm^2)	1.357	1.077	1.438	1.448	1.032	1.248	1.233	1.206
56	**Equip dP**	(kg/cm^2)	**1.557**	**1.277**	**1.638**	**1.648**	**1.232**	**1.448**	**1.433**	**3.006**
57	Pipe Entrance									
58	Pipe Exit									
59	90 Elbow									
60	Tee									
61	Globe Valve									
62	Gate Valve									
63	Check Valve									
64	Butterfly Valve									
65	Ball valve									
66	Contraction									
67	Enlargement									
68	Other's K									
69	**Sum (Ki)**									
70	**Fitting dP**	(kg/cm^2)								
71	**Total dP**	(kg/cm^2)	**2.407**	**1.656**	**1.767**	**1.740**	**1.476**	**2.364**	**1.780**	**3.167**
72	**Remarks**									
73										
74			**DESIGN FLOWRATE FROM BTX**	**DESIGN FLOWRATE FROM BTX**	**DESIGN FLOWRATE FROM NCC**	**DESIGN FLOWRATE FROM BTX**	**DESIGN FLOWRATE FROM BTX**	**DESIGN FLOWRATE FROM BTX**	**DESIGN FLOWRATE FROM BTX**	**DESIGN FLOWRATE FROM BTX**
75										
76										
77										

MAX TANK OP

PT LOTTE CHEMICAL INDONESIA

LINE HYDRAULIC CALCULATION SHEET (LINE WP5)

LOTTE E&C

1	PROJECT :	LINE PROJECT	JOB NO. :	15005
2	CLIENT :	PT LOTTE CHEMICAL INDONESIA	DOCU. NO. :	LINE-900-BC-4-0001
3	LOCATION :	CILEGON, INDONESIA	P&ID NO. :	REFER TO ROW NO. 10
4	UNIT :	**WP5**	CASE :	DESIGN
5	SERVICE :	**3.1 RUNDOWN TO TANK**	SHEET :	4 OF 4 (RUNDOWN TO TANK)

REVISION

6	**Item**		**C9+**	**PFO**	
7	Line No		HC-4080	FO-4001	FO-4001
8		**From**	**BTX (WP5 BL)**	**NCC (WP5 BL)**	**RED 6"x4"**
9		**To**	**TK-408**	**RED 6"x4"**	**TK-409A**
10		P&ID No.	904-0008	904-0009	904-0009
11		Piping Material Class	1C1P	3C1P	3C1P
12		Pipe Schedule	40	40	40
13		Pipe Roughness (mm)	0.046	0.046	0.046
14		**Fluid**	**C9+**	**PFO**	**PFO**
15	Calc Mode (L, Vu, Vd)		L	L	L
16	Temperature	: T (C)	50.0	93.0	93.0
17	Pressure	: P (kg/cm^2G)	2.93	1.75	1.75
18	Density	@ T,P (kg/m^3)	865.0	1061.1	1061.1
19	Molecular	@ T,P (-)			
20	Compress. Fact.	@ T,P (-)			
21	Viscosity	@ T,P (cP)	0.650	1.108	1.108
22	C_P / C_V	@ T,P			
23	M/B Flow Rate	(kg/h)	9,012	7,372	7,372
24	Excess Ratio	(-)	1.00	1.00	1.00
25	Flow Rate	(kg/h)	9,012	7,372	7,372
26	**Line Length**	(m)	**450**	**350**	**50**
27	**Pipe Nominal Size**	(inch)	**2**	**6**	**4**
28		**Calculation Result**	**OK**	**OK**	**OK**
29	Inlet Press.	(Input) (kg/cm^2G)	2.93	1.75	1.75
30	Inlet Press.	(Calcul'd) (kg/cm^2G)	**2.93**	**1.75**	**1.75**
31	Velocity	@ Inlet (m/sec)	1.34	0.10	0.23
32	Reynolds No.	@ Inlet (-)	93401.77	15275.33	23011.58
33	d*V*V/2g	@ Inlet (kg/cm^2)	78.82	0.58	2.99
34	4*F*L/D	@ Inlet (-)	187.75	64.22	12.74
35	dP/100m	@ Inlet (kg/cm^2)	0.33	0.00	0.01
36	Outlet Press.	(Input) (kg/cm^2G)			
37	Outlet Press.	(Calcul'd) (kg/cm^2G)	**0.00**	**1.75**	**0.00** ← MAX TANK OP
38	**Velocity**	**@ Outlet (m/sec)**	**1.34**	**0.10**	**0.23**
39		Limit	2.40	2.40	2.40
40	Sonic Velocity	@ Outlet (m/sec)			
41	Mach No.	@ Outlet (-)			
42	Reynolds No.	@ Outlet (-)	93401.77	15275.33	23011.58
43	d*V*V/2g	@ Outlet (kg/cm^2)	78.82	0.58	2.99
44	4*F*L/D	@ Outlet (-)	187.75	64.22	12.74
45	**dP/100m**	**@ Outlet (kg/cm^2)**	**0.329**	**0.001**	**0.008**
46		Limit	1.380	1.380	1.380
47	**Straight Pipe dP**	(kg/cm^2)	**1.480**	**0.004**	**0.004**
48	dP of Control Valve	(kg/cm^2)			
49	dP of Heat Exchanger	(kg/cm^2)			
50	dP of Column	(kg/cm^2)			
51	dP of Strainer	(kg/cm^2)			
52	dP of Orifice	(kg/cm^2)	0.2		0.2
53	Other dP	(kg/cm^2)			
54	Static Head	(m)	14.5		14.5
55		(kg/cm^2)	1.254		1.539
56	**Equip dP**	(kg/cm^2)	**1.454**		**1.739**
57	Pipe Entrance				
58	Pipe Exit				
59	90 Elbow				
60	Tee				
61	Globe Valve				
62	Gate Valve				
63	Check Valve				
64	Butterfly Valve				
65	Ball valve				
66	Contraction				
67	Enlargement				
68	Other's K				
69	**Sum (Ki)**				
70	**Fitting dP**	(kg/cm^2)			
71	**Total dP**	(kg/cm^2)	**2.934**	**0.004**	**1.742**
72	**Remarks**				
73					
74			**DESIGN FLOWRATE FROM BTX**	**DESIGN FLOWRATE FROM NCC**	**DESIGN FLOWRATE FROM NCC**
75					
76					
77					

PT LOTTE CHEMICAL INDONESIA

LINE HYDRAULIC CALCULATION SHEET (LINE WP5)

LOTTE E&C

1	PROJECT :	LINE PROJECT				JOB NO. :	15005				REVISION
2	CLIENT :	PT LOTTE CHEMICAL INDONESIA				DOCU. NO. :	LINE-900-BC-4-0001				
3	LOCATION :	CILEGON, INDONESIA				P&ID NO. :	REFER TO ROW NO. 10				
4	UNIT :	**WP5**				CASE :	DESIGN				
5	SERVICE :	**3.2 COOL DOWN**				SHEET :	1 OF 1 (COOL DOWN)				
6	**Item**		**C3 LPG**	**C4 LPG**	**LP EL**	**LP PL**					
7	Line No		LPG-2026	LPG-2122	EL-2035	PL-2025					
8		**From**	**P-201 DISCH**	**P-203 DISCH**	**P-225 DISCH**	**P-228 DISCH**					
9		**To**	**IMPORT LINE**	**IMPORT LINE**	**EXPORT LINE**	**EXPORT LINE**					
10		P&ID No.	902-0001	902-0005	902-0008	902-0012					
11		Piping Material Class	3L1P	3L1P	3S0Y	3L1P					
12		Pipe Schedule	40	40	10S	40					
13		Pipe Roughness (mm)	0.046	0.046	0.015	0.046					
14		**Fluid**	**C3 LPG**	**C4 LPG**	**LP EL**	**LP PL**					
15	Calc Mode (L, Vu, Vd)		L	L	L	L					
16	Temperature	: T (C)	-43.6	-3.0	-103.6	-46.9					
17	Pressure	: P (kg/cm^2G)	19.90	17.30	26.20	22.30					
18	Density	@ T,P (kg/m^3)	582.0	597.0	566.0	608.0					
19	Molecular	@ T,P (-)									
20	Compress. Fact.	@ T,P (-)									
21	Viscosity	@ T,P (cP)	0.202	0.216	0.180	0.18					
22	C_P / C_V	@ T,P									
23	M/B Flow Rate	(kg/h)	10,000	10,000	6,000	3,200					
24	Excess Ratio	(-)	1.00	1.00	1.00	1.00					
25	Flow Rate	(kg/h)	10,000	10,000	6,000	3,200					
26	**Line Length**	(m)	**100**	**100**	**100**	**100**					
27	**Pipe Nominal Size**	(inch)	**2**	**2**	**4**	**2**					
28		**Calculation Result**	**OK**	**OK**	**OK**	**OK**					
29	Inlet Press.	(Input) (kg/cm^2G)	19.90	17.30	26.20	22.30					
30	Inlet Press.	(Calcul'd) (kg/cm^2G)	**19.90**	**17.30**	**26.20**	**22.30**					
31	Velocity	@ Inlet (m/sec)	2.20	2.15	0.32	0.68					
32	Reynolds No.	@ Inlet (-)	333500.07	311884.32	108957.74	123185.40					
33	d*V*V/2g	@ Inlet (kg/cm^2)	144.25	140.62	2.96	14.14					
34	4*F*L/D	@ Inlet (-)	38.04	38.16	17.04	40.61					
35	dP/100m	@ Inlet (kg/cm^2)	0.55	0.54	0.01	0.06					
36	Outlet Press.	(Input) (kg/cm^2G)									
37	Outlet Press.	(Calcul'd) (kg/cm^2G)	**19.35**	**16.76**	**26.19**	**22.24**					
38	**Velocity**	**@ Outlet (m/sec)**	**2.20**	**2.15**	**0.32**	**0.68**					
39		Limit	2.40	2.40	2.40	2.40					
40	Sonic Velocity	@ Outlet (m/sec)									
41	Mach No.	@ Outlet (-)									
42	Reynolds No.	@ Outlet (-)	333500.07	311884.32	108957.74	123185.40					
43	d*V*V/2g	@ Outlet (kg/cm^2)	144.25	140.62	2.96	14.14					
44	4*F*L/D	@ Outlet (-)	38.04	38.16	17.04	40.61					
45	**dP/100m**	**@ Outlet (kg/cm^2)**	**0.549**	**0.537**	**0.005**	**0.057**					
46		Limit	1.380	1.380	1.380	1.380					
47	**Straight Pipe dP**	(kg/cm^2)	**0.549**	**0.537**	**0.005**	**0.057**					
48	dP of Control Valve	(kg/cm^2)									
49	dP of Heat Exchanger	(kg/cm^2)									
50	dP of Column	(kg/cm^2)									
51	dP of Strainer	(kg/cm^2)									
52	dP of Orifice	(kg/cm^2)									
53	Other dP	(kg/cm^2)									
54	Static Head	(m)									
55		(kg/cm^2)									
56	**Equip dP**	(kg/cm^2)									
57	Pipe Entrance										
58	Pipe Exit										
59	90 Elbow										
60	Tee										
61	Globe Valve										
62	Gate Valve										
63	Check Valve										
64	Butterfly Valve										
65	Ball valve										
66	Contraction										
67	Enlargement										
68	Other's K										
69	**Sum (Ki)**										
70	**Fitting dP**	(kg/cm^2)									
71	**Total dP**	(kg/cm^2)	**0.549**	**0.537**	**0.005**	**0.057**					
72	**Remarks**										
73			BOG	BOG	BOG	BOG					
74			COMPRESSOR	COMPRESSOR	COMPRESSOR	COMPRESSOR					
75			CAPA. X 2	CAPA. X 2	CAPA. X 2	CAPA. X 2					
76			OPER.	OPER.	OPER.	OPER.					
77											

PUMP DISCH. P

LINE HYDRAULIC CALCULATION SHEET
(LINE WP5)

PT LOTTE CHEMICAL INDONESIA

LOTTE E&C

PROJECT :	LINE PROJECT	JOB NO. :	15005
CLIENT :	PT LOTTE CHEMICAL INDONESIA	DOCU. NO. :	LINE-900-BC-4-0001
LOCATION :	CILEGON, INDONESIA	P&ID NO. :	REFER TO ROW NO. 10
UNIT :	**WP5**	CASE :	DESIGN
SERVICE :	**3.3 COMPRESSOR CIRCUIT**	SHEET :	1 OF 9 (COMPRESSOR CIRCUIT)

REVISION

SYSTEM SKETCH

3.3.1 C3 LPG BOG COMPRESSOR

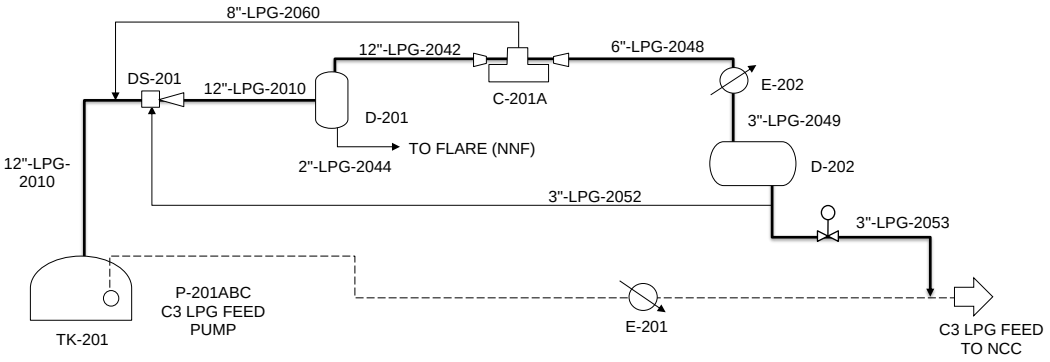

3.3.2 C4 LPG BOG COMPRESSOR

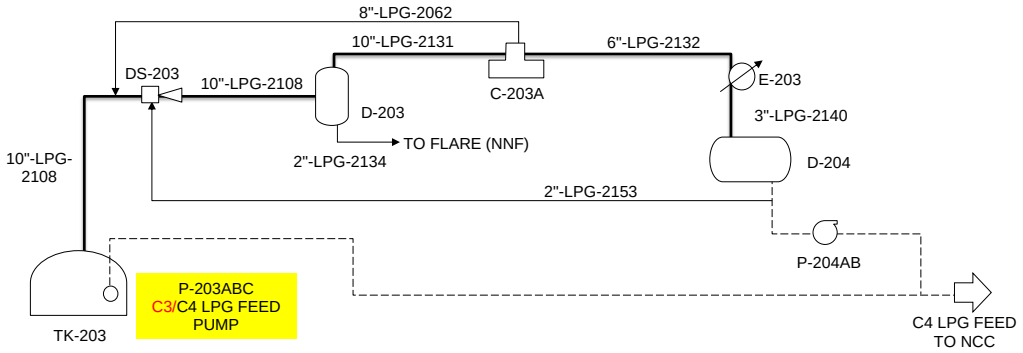

3.3.3 ETHYLENE BOG COMPRESSOR

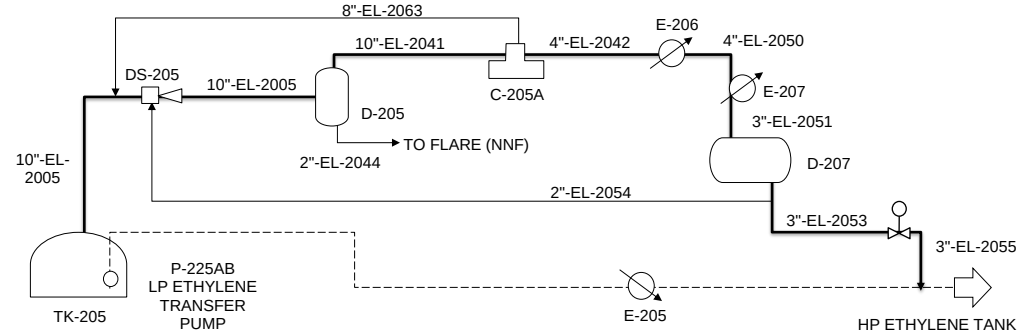

3.3.4 PROPYLENE BOG COMPRESSOR

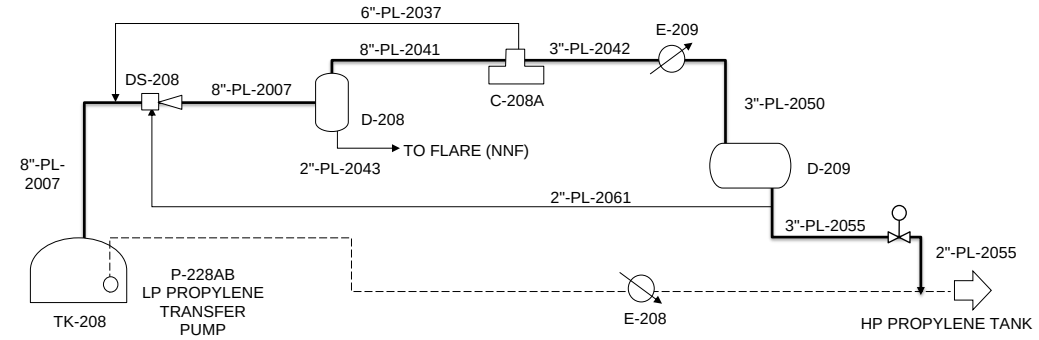

PT LOTTE CHEMICAL INDONESIA

LINE HYDRAULIC CALCULATION SHEET (LINE WP5)

LOTTE E&C

1	PROJECT :	LINE PROJECT	JOB NO. :	15005
2	CLIENT :	PT LOTTE CHEMICAL INDONESIA	DOCU. NO. :	LINE-900-BC-4-0001
3	LOCATION :	CILEGON, INDONESIA	P&ID NO. :	REFER TO ROW NO. 10
4	UNIT :	**WP5**	CASE :	DESIGN
5	SERVICE :	**3.3 COMPRESSOR CIRCUIT**	SHEET :	2 OF 9 (COMPRESSOR CIRCUIT)

REVISION

6	**Item**			**3.3.1 C3 LPG BOG COMPRESSOR**						
7	Line No			LPG-2010	LPG-2010	LPG-2042	-	-	LPG-2048	LPG-2049
8		**From**		**TK-201**	**DS-201**	**D-201**	**-**	**Comp. Disch.**	**C-201 A/B**	**E-202**
9		**To**		**DS-201**	**D-201**	**C-201 A/B**	**Comp. Suc.**	**-**	**E-202**	**D-202**
10		P&ID No.		902-0001	902-0003	902-0003	902-0003	902-0003	902-0003	902-0004
11		Piping Material Class		1L1P	1L1P	1L1P	1L1P	3L1P	3L1P	3L1P
12		Pipe Schedule		STD	STD	STD	40	40	40	40
13		Pipe Roughness (mm)		0.046	0.046	0.046	0.046	0.046	0.046	0.046
14		**Fluid**		**LP C3 LPG BOG**	**LP C3 LPG BOG**	**LP C3 LPG BOG**	**LP C3 LPG BOG**	**LP C3 LPG BOG**	**LP C3 LPG BOG**	**LP C3 LPG**
15	Calc Mode (L, Vu, Vd)			Vu	Vu	Vu	Vu	Vu	Vu	L
16	Temperature	: T	(C)	-43.6	-41.7	-41.7	-41.7	103.9	103.9	44.0
17	Pressure	: P	(kg/cm^2G)	**0.10**	0.06	0.05	0.05	**21.00**	20.98	20.65
18	Density	@ T,P	(kg/m^3)							451.9
19	Molecular	@ T,P	(-)	42.95	42.95	42.95	42.95	42.95	42.95	
20	Compress. Fact.	@ T,P	(-)	0.97	0.97	0.97	0.97	0.97	0.97	
21	Viscosity	@ T,P	(cP)	0.01	0.01	0.01	0.01	0.01	0.01	0.08
22	C_P / C_V	@ T,P		1.17	1.17	1.17	1.17	1.17	1.17	
23	M/B Flow Rate		(kg/h)	10,000	10,000	10,000	5,000	5,000	10,000	10,000
24	Excess Ratio		(-)	1.00	1.00	1.00	1.00	1.00	1.00	1.00
25	Flow Rate		(kg/h)	10,000	10,000	10,000	5,000	5,000	10,000	10,000
26	**Line Length**		(m)	**278**	**30**	**22.5**	**22.5**	**22.5**	**79.5**	**100**
27	**Pipe Nominal Size**		(inch)	**12**	**12**	**12**	**10**	**4**	**6**	**3**
28		**Calculation Result**		**OK**	**OK**	**OK**	**OK**	**OK**	**OK**	**OK**
29	Inlet Press.	(Input)	(kg/cm^2G)	0.10	0.06	0.05	0.05	21.00	20.98	20.65
30	Inlet Press.	(Calcul'd)	(kg/cm^2G)	**0.10**	**0.06**	**0.05**	**0.05**	**21.00**	**20.98**	**20.65**
31	Velocity	@ Inlet	(m/sec)	14.74	15.42	15.49	11.14	5.53	4.88	1.29
32	Reynolds No.	@ Inlet	(-)	1160357.03	1160357.03	1160357.03	694819.11	1441084.92	1913214.46	581845.02
33	d*V*V/2g	@ Inlet	(kg/cm^2)	28.61	29.94	30.06	15.50	47.70	37.08	38.26
34	4*F*L/D	@ Inlet	(-)	12.75	1.38	1.03	1.31	3.67	7.90	23.20
35	dP/100m	@ Inlet	(kg/cm^2)	0.01	0.01	0.01	0.01	0.08	YYY	0.09
36	Outlet Press.	(Input)	(kg/cm^2G)							
37	Outlet Press.	(Calcul'd)	(kg/cm^2G)	**0.06**	**0.05**	**0.05**	**0.05**	**20.98**	**20.65**	**20.79**
38	**Velocity**	**@ Outlet**	**(m/sec)**	**15.30**	**15.49**	**15.53**	**11.17**	**5.54**	**4.95**	**1.29**
39			Limit	60.96	60.96	60.96	60.96	76.20	76.20	1.80
40	Sonic Velocity	@ Outlet	(m/sec)	223.91	224.83	224.83	224.83	286.96	286.96	
41	Mach No.	@ Outlet	(-)	0.07	0.07	0.07	0.05	0.02	0.02	
42	Reynolds No.	@ Outlet	(-)	1160357.03	1160357.03	1160357.03	694819.11	1441084.92	1913214.46	581845.02
43	d*V*V/2g	@ Outlet	(kg/cm^2)	29.69	30.06	30.15	15.54	47.74	37.64	38.26
44	4*F*L/D	@ Outlet	(-)	12.75 Y		1.03	1.31	3.67	7.90	23.20
45	**dP/100m**	**@ Outlet**	**(kg/cm^2)**	**0.014**	**0.014**	**0.014**	**0.009**	**0.078**	**0.037**	**0.089**
46			Limit	0.035	0.035	0.120	0.120	0.230	0.230	0.120
47	**Straight Pipe dP**		(kg/cm^2)	**0.037**	**0.004**	**0.003**	**0.002**	**0.018**	**0.030**	**0.089**
48	dP of Control Valve		(kg/cm^2)							
49	dP of Heat Exchanger		(kg/cm^2)						0.3	
50	dP of Column		(kg/cm^2)							
51	dP of Strainer		(kg/cm^2)							
52	dP of Orifice		(kg/cm^2)							
53	Other dP		(kg/cm^2)							
54	Static Head		(m)							-5.02
55			(kg/cm^2)							-0.227
56	**Equip dP**		(kg/cm^2)						**0.300**	**-0.227**
57	Pipe Entrance									
58	Pipe Exit									
59	90 Elbow			6						
60	Tee									
61	Globe Valve									
62	Gate Valve			1	1		1	1		1
63	Check Valve									
64	Butterfly Valve									
65	Ball valve									
66	Contraction						1			
67	Enlargement							1		
68	Other's K									
69	**Sum (Ki)**			1.323	0.114		0.320	0.419		0.147
70	**Fitting dP**		(kg/cm^2)	**0.004**	**0.000**		**0.000**	**0.002**		**0.001**
71	**Total dP**		(kg/cm^2)	**0.041**	**0.004**	**0.003**	**0.003**	**0.020**	**0.330**	**-0.138**
72	**Remarks**									
73										
74				COMPRESSOR DESIGN FLOWRATE	COMPRESSOR DESIGN FLOWRATE	COMPRESSOR DESIGN FLOWRATE	COMPRESSOR DESIGN FLOWRATE	COMPRESSOR DESIGN FLOWRATE	COMPRESSOR DESIGN FLOWRATE	COMPRESSOR DESIGN FLOWRATE
75										
76										
77										

PT LOTTE CHEMICAL INDONESIA

LINE HYDRAULIC CALCULATION SHEET (LINE WP5)

LOTTE E&C

1	PROJECT :	LINE PROJECT				JOB NO. :	15005				REVISION
2	CLIENT :	PT LOTTE CHEMICAL INDONESIA				DOCU. NO. :	LINE-900-BC-4-0001				
3	LOCATION :	CILEGON, INDONESIA				P&ID NO. :	REFER TO ROW NO. 10				
4	UNIT :	**WP5**				CASE :	DESIGN				
5	SERVICE :	**3.3 COMPRESSOR CIRCUIT**				SHEET :	3 OF 9 (COMPRESSOR CIRCUIT)				
6	**Item**		**3.3.1 C3 LPG BOG COMPRESSOR**								
7	Line No		LPG-2053	LPG-2053	LPG-2052	LPG-2060	LPG-2044				
8		**From**	**D-202**	**LV-2007**	**D-202**	**C-201A/B**	**D-201**				
9		**To**	**LV-2007**	**E-201 Outlet**	**DS-201**	**DS-201**	**FLARE**				
10		P&ID No.	902-0004	902-0004	902-0004	902-0003	902-0003				
11		Piping Material Class	3L1P	3L1P	3L1P	1L1P	1L1P				
12		Pipe Schedule	40	40	40	40	40				
13		Pipe Roughness (mm)	0.046	0.046	0.046	0.046	0.046				
14		**Fluid**	**LP C3 LPG**	**LP C3 LPG**	**LP C3 LPG**	**LP C3 LPG BOG**	**LP C3 LPG**				
15	Calc Mode (L, Vu, Vd)		L	L	L	Vd	L				
16	Temperature	: T (C)	44.0	44.0	44.0	-41.7	-41.7				
17	Pressure	: P (kg/cm^2G)	20.70	17.90	20.70	0.10	0.10				
18	Density	@ T,P (kg/m^3)	451.9	451.9	451.9		451.9				
19	Molecular	@ T,P (-)				42.95					
20	Compress. Fact.	@ T,P (-)				0.97					
21	Viscosity	@ T,P (cP)	0.08	0.08	0.08	0.01	0.08				
22	C_P / C_V	@ T,P				1.17					
23	M/B Flow Rate	(kg/h)	10,000	10,000	4,750	10,000	3,500				
24	Excess Ratio	(-)	1.00	1.00	1.00	1.00	1.00				
25	Flow Rate	(kg/h)	10,000	10,000	4,750	10,000	3,500				
26	**Line Length**	(m)	**12**	**30**	**100**	**45**	**100**				
27	**Pipe Nominal Size**	(inch)	**3**	**3**	**3**	**8**	**2**				
28		**Calculation Result**	**OK**	**OK**	**OK**	**OK**	**OK**				
29	Inlet Press.	(Input) (kg/cm^2G)	20.70	17.90	20.70		0.10				
30	Inlet Press.	(Calcul'd) (kg/cm^2G)	**20.70**	**17.90**	**20.70**	**0.15**	**0.10**				
31	Velocity	@ Inlet (m/sec)	1.29	1.29	0.61	32.24	0.99				
32	Reynolds No.	@ Inlet (-)	581845.02	581845.02	276376.39	1744656.79	302287.88				
33	d*V*V/2g	@ Inlet (kg/cm^2)	38.26	38.26	8.63	141.45	22.76				
34	4*F*L/D	@ Inlet (-)	2.78	6.96	24.12	3.24	38.21				
35	dP/100m	@ Inlet (kg/cm^2)	0.09	0.09	0.02	0.10	0.09				
36	Outlet Press.	(Input) (kg/cm^2G)				0.10					
37	Outlet Press.	(Calcul'd) (kg/cm^2G)	**17.90**	**17.57**	**20.68**	**0.10**	**0.01**				
38	**Velocity**	**@ Outlet (m/sec)**	**1.29**	**1.29**	**0.61**	**33.60**	**0.99**				
39		Limit	1.80	1.80	1.80	76.20	2.40				
40	Sonic Velocity	@ Outlet (m/sec)				224.83					
41	Mach No.	@ Outlet (-)				0.15					
42	Reynolds No.	@ Outlet (-)	581845.02	581845.02	276376.39	1744656.79	302287.88				
43	d*V*V/2g	@ Outlet (kg/cm^2)	38.26	38.26	8.63	147.44	22.76				
44	4*F*L/D	@ Outlet (-)	2.78	6.96	24.12	3.24	38.21				
45	**dP/100m**	**@ Outlet (kg/cm^2)**	**0.089**	**0.089**	**0.021**	**0.106**	**0.087**				
46		Limit	0.120	0.120	0.120	0.230	0.090				
47	**Straight Pipe dP**	(kg/cm^2)	**0.011**	**0.027**	**0.021**	**0.048**	**0.087**				
48	dP of Control Valve	(kg/cm^2)	2.84								
49	dP of Heat Exchanger	(kg/cm^2)									
50	dP of Column	(kg/cm^2)									
51	dP of Strainer	(kg/cm^2)									
52	dP of Orifice	(kg/cm^2)									
53	Other dP	(kg/cm^2)									
54	Static Head	(m)	-1.25	6.7							
55		(kg/cm^2)	-0.056	0.303							
56	**Equip dP**	(kg/cm^2)	**2.784**	**0.303**							
57	Pipe Entrance										
58	Pipe Exit										
59	90 Elbow										
60	Tee										
61	Globe Valve										
62	Gate Valve		2	3							
63	Check Valve			1							
64	Butterfly Valve										
65	Ball valve										
66	Contraction										
67	Enlargement			1							
68	Other's K										
69	**Sum (Ki)**		0.294	1.400							
70	**Fitting dP**	(kg/cm^2)	**0.001**	**0.005**							
71	**Total dP**	(kg/cm^2)	**2.795**	**0.335**	**0.021**	**0.048**	**0.087**				
72	**Remarks**										
73											
74			COMPRESSOR DESIGN FLOWRATE	COMPRESSOR DESIGN FLOWRATE	COMPRESSOR DESIGN FLOWRATE	DESUPERHEATER DESIGN FLOWRATE	FLOWRATE ASSUMED FOR GRAVITY FLOW				
75											
76											
77											

PT LOTTE CHEMICAL INDONESIA

LINE HYDRAULIC CALCULATION SHEET (LINE WP5)

LOTTE E&C

1	PROJECT :	LINE PROJECT				JOB NO. :	15005				REVISION
2	CLIENT :	PT LOTTE CHEMICAL INDONESIA				DOCU. NO. :	LINE-900-BC-4-0001				
3	LOCATION :	CILEGON, INDONESIA				P&ID NO. :	REFER TO ROW NO. 10				
4	UNIT :	**WP5**				CASE :	DESIGN				
5	SERVICE :	**3.3 COMPRESSOR CIRCUIT**				SHEET :	4 OF 9 (COMPRESSOR CIRCUIT)				
6	**Item**		**3.3.2 C4 LPG BOG COMPRESSOR**								
7	Line No		LPG-2108	LPG-2108	LPG-2131	-	-	LPG-2132	LPG-2140	LPG-2153	
8		**From**	**TK-203**	**DS-203**	**D-203**	**-**	**Comp. Disch.**	**C-203 A/B**	**E-203**	**D-204**	
9		**To**	**DS-203**	**D-203**	**C-203 A/B**	**Comp. Suc.**	**-**	**E-203**	**D-204**	**DS-203**	
10		P&ID No.	902-0005	902-0006	902-0006	902-0006	902-0006	902-0006	902-0007	902-0007	
11		Piping Material Class	1L1P	1L1P	1L1P	1L1P	1L1P	1L1P	1L1P	1L1P	
12		Pipe Schedule	40	40	40	40	40	40	40	40	
13		Pipe Roughness (mm)	0.046	0.046	0.046	0.046	0.046	0.046	0.046	0.046	
14		**Fluid**	**C4 LPG BOG**	**C4 LPG BOG**	**C4 LPG BOG**	**C4 LPG BOG**	**C4 LPG BOG**	**C4 LPG BOG**	**LP C4 LPG**	**LP C4 LPG**	
15	Calc Mode (L, Vu, Vd)		Vu	Vu	Vu	Vu	Vu	Vu	L	L	
16	Temperature	: T (C)	-3.0	-1.9	-1.9	-1.9	84.0	84.0	44.0	44.0	
17	Pressure	: P (kg/cm^2G)	0.10	0.03	0.02	0.01	6.00	5.99	5.61	5.70	
18	Density	@ T,P (kg/m^3)							540.2	540.2	
19	Molecular	@ T,P (-)	57.45	57.45	57.45	57.45	57.45	57.45			
20	Compress. Fact.	@ T,P (-)	0.96	0.96	0.96	0.96	0.96	0.96			
21	Viscosity	@ T,P (cP)	0.01	0.01	0.01	0.01	0.01	0.01	0.14	0.14	
22	C_P / C_V	@ T,P	1.11	1.11	1.11	1.11	1.11	1.11			
23	M/B Flow Rate	(kg/h)	10,000	10,000	10,000	5,000	5,000	10,000	10,000	3,200	
24	Excess Ratio	(-)	1.00	1.00	1.00	1.00	1.00	1.00	1.00	1.00	
25	Flow Rate	(kg/h)	10,000	10,000	10,000	5,000	5,000	10,000	10,000	3,200	
26	**Line Length**	(m)	**210.5**	**30**	**22.5**	**22.5**	**22.5**	**106.5**	**100**	**100**	
27	**Pipe Nominal Size**	(inch)	**10**	**10**	**10**	**10**	**6**	**6**	**3**	**2**	
28		**Calculation Result**	**OK**	**OK**	**OK**	**OK**	**OK**	**OK**	**OK**	**OK**	
29	Inlet Press.	(Input) (kg/cm^2G)	0.10	0.03	0.02	0.01	6.00	5.99	5.61	5.70	
30	Inlet Press.	(Calcul'd) (kg/cm^2G)	**0.10**	**0.03**	**0.02**	**0.01**	**6.00**	**5.99**	**5.61**	**5.70**	
31	Velocity	@ Inlet (m/sec)	18.51	19.81	20.00	10.07	5.38	10.77	1.08	0.76	
32	Reynolds No.	@ Inlet (-)	1389638.22	1389638.22	1389638.22	694819.11	1147928.67	2295857.35	333705.23	158510.62	
33	d*V*V/2g	@ Inlet (kg/cm^2)	51.52	55.15	55.68	14.01	20.44	81.82	32.01	15.91	
34	4*F*L/D	@ Inlet (-)	11.75	1.68	1.26	1.31	2.27	10.54	23.84	39.76	
35	dP/100m	@ Inlet (kg/cm^2)	0.03	0.03	0.03	0.01	0.02	0.08	0.08	0.06	
36	Outlet Press.	(Input) (kg/cm^2G)									
37	Outlet Press.	(Calcul'd) (kg/cm^2G)	**0.03**	**0.02**	**0.01**	**0.01**	**5.99**	**5.61**	**5.81**	**5.64**	
38	**Velocity**	**@ Outlet (m/sec)**	**19.73**	**20.00**	**20.14**	**10.09**	**5.38**	**11.40**	**1.08**	**0.76**	
39		Limit	60.96	60.96	60.96	60.96	76.20	76.20	1.80	1.80	
40	Sonic Velocity	@ Outlet (m/sec)	204.66	205.08	205.08	205.08	235.32	235.32			
41	Mach No.	@ Outlet (-)	0.10	0.10	0.10	0.05	0.02	0.05			
42	Reynolds No.	@ Outlet (-)	1389638.22	1389638.22	1389638.22	694819.11	1147928.67	2295857.35	333705.23	158510.62	
43	d*V*V/2g	@ Outlet (kg/cm^2)	54.93	55.68	56.06	14.04	20.46	86.62	32.01	15.91	
44	4*F*L/D	@ Outlet (-)	11.75	1.68	1.26	1.31	2.27	10.54	23.84	39.76	
45	**dP/100m**	**@ Outlet (kg/cm^2)**	**0.031**	**0.031**	**0.031**	**0.008**	**0.021**	**0.086**	**0.076**	**0.063**	
46		Limit	0.035	0.035	0.120	0.120	0.230	0.230	0.120	0.120	
47	**Straight Pipe dP**	(kg/cm^2)	**0.063**	**0.009**	**0.007**	**0.002**	**0.005**	**0.090**	**0.076**	**0.063**	
48	dP of Control Valve	(kg/cm^2)									
49	dP of Heat Exchanger	(kg/cm^2)						0.3			
50	dP of Column	(kg/cm^2)									
51	dP of Strainer	(kg/cm^2)									
52	dP of Orifice	(kg/cm^2)									
53	Other dP	(kg/cm^2)									
54	Static Head	(m)							-5.17		
55		(kg/cm^2)							-0.279		
56	**Equip dP**	(kg/cm^2)						**0.300**	**-0.279**		
57	Pipe Entrance										
58	Pipe Exit										
59	90 Elbow		6								
60	Tee										
61	Globe Valve										
62	Gate Valve		1	1		1	1		1		
63	Check Valve										
64	Butterfly Valve										
65	Ball valve										
66	Contraction					1					
67	Enlargement						1				
68	Other's K										
69	**Sum (Ki)**		1.353	0.117		0.320	0.268		0.147		
70	**Fitting dP**	(kg/cm^2)	**0.007**	**0.001**		**0.000**	**0.001**		**0.000**		
71	**Total dP**	(kg/cm^2)	**0.070**	**0.010**	**0.007**	**0.002**	**0.005**	**0.390**	**-0.203**	**0.063**	
72	**Remarks**										
73											
74			COMPRESSOR DESIGN FLOWRATE	COMPRESSOR DESIGN FLOWRATE	COMPRESSOR DESIGN FLOWRATE	COMPRESSOR DESIGN FLOWRATE	COMPRESSOR DESIGN FLOWRATE	COMPRESSOR DESIGN FLOWRATE	COMPRESSOR DESIGN FLOWRATE	DESUPERHEAER DESIGN FLOWRATE	
75											
76											
77											

PT LOTTE CHEMICAL INDONESIA

LINE HYDRAULIC CALCULATION SHEET (LINE WP5)

LOTTE E&C

1	PROJECT :	LINE PROJECT	JOB NO. :	15005
2	CLIENT :	PT LOTTE CHEMICAL INDONESIA	DOCU. NO. :	LINE-900-BC-4-0001
3	LOCATION :	CILEGON, INDONESIA	P&ID NO. :	REFER TO ROW NO. 10
4	UNIT :	**WP5**	CASE :	DESIGN
5	SERVICE :	**3.3 COMPRESSOR CIRCUIT**	SHEET :	5 OF 9 (COMPRESSOR CIRCUIT)

REVISION

6	**Item**			**3.3.2 C4 LPG BOG COMPRESSOR**							
7	Line No			LPG-2062	LPG-2134						
8		**From**		**C-203A/B**	**D-203**						
9		**To**		**DS-203**	**FLARE**						
10		P&ID No.		902-0006	902-0006						
11		Piping Material Class		1L1P	1L1P						
12		Pipe Schedule		40	40						
13		Pipe Roughness (mm)		0.046	0.046						
14		**Fluid**		**C4 LPG BOG**	**LP C4 LPG**						
15	Calc Mode (L, Vu, Vd)			Vd	L						
16	Temperature	: T	(C)	-1.9	-1.9						
17	Pressure	: P	(kg/cm^2G)	0.10	0.10						
18	Density	@ T,P	(kg/m^3)		540.2						
19	Molecular	@ T,P	(-)	57.45							
20	Compress. Fact.	@ T,P	(-)	0.96							
21	Viscosity	@ T,P	(cP)	0.01	0.14						
22	C_P / C_V	@ T,P		1.11							
23	M/B Flow Rate		(kg/h)	10,000	3,800						
24	Excess Ratio		(-)	1.00	1.00						
25	Flow Rate		(kg/h)	10,000	3,800						
26	**Line Length**		(m)	**45**	**100**						
27	**Pipe Nominal Size**		(inch)	**8**	**2**						
28		**Calculation Result**		**OK**	**OK**						
29	Inlet Press.	(Input)	(kg/cm^2G)		0.10						
30	Inlet Press.	(Calcul'd)	(kg/cm^2G)	**0.14**	**0.10**						
31	Velocity	@ Inlet	(m/sec)	28.25	0.90						
32	Reynolds No.	@ Inlet	(-)	1744656.79	188231.36						
33	d*V*V/2g	@ Inlet	(kg/cm^2)	123.94	22.44						
34	4*F*L/D	@ Inlet	(-)	3.24	39.27						
35	dP/100m	@ Inlet	(kg/cm^2)	0.09	0.09						
36	Outlet Press.	(Input)	(kg/cm^2G)	0.10							
37	Outlet Press.	(Calcul'd)	(kg/cm^2G)	**0.10**	**0.01**						
38	**Velocity**	**@ Outlet**	**(m/sec)**	**29.29**	**0.90**						
39			Limit	76.20	2.40						
40	Sonic Velocity	@ Outlet	(m/sec)	205.08							
41	Mach No.	@ Outlet	(-)	0.14							
42	Reynolds No.	@ Outlet	(-)	1744656.79	188231.36						
43	d*V*V/2g	@ Outlet	(kg/cm^2)	128.52	22.44						
44	4*F*L/D	@ Outlet	(-)	3.24	39.27						
45	**dP/100m**	**@ Outlet**	**(kg/cm^2)**	**0.093**	**0.088**						
46			Limit	0.230	0.090						
47	**Straight Pipe dP**		(kg/cm^2)	**0.042**	**0.088**						
48	dP of Control Valve		(kg/cm^2)								
49	dP of Heat Exchanger		(kg/cm^2)								
50	dP of Column		(kg/cm^2)								
51	dP of Strainer		(kg/cm^2)								
52	dP of Orifice		(kg/cm^2)								
53	Other dP		(kg/cm^2)								
54	Static Head		(m)								
55			(kg/cm^2)								
56	**Equip dP**		(kg/cm^2)								
57	Pipe Entrance										
58	Pipe Exit										
59	90 Elbow										
60	Tee										
61	Globe Valve										
62	Gate Valve										
63	Check Valve										
64	Butterfly Valve										
65	Ball valve										
66	Contraction										
67	Enlargement										
68	Other's K										
69	**Sum (Ki)**										
70	**Fitting dP**		(kg/cm^2)								
71	**Total dP**		(kg/cm^2)	**0.042**	**0.088**						
72	**Remarks**										
73											
74				DESUPERHEAER DESIGN FLOWRATE	FLOWRATE ASSUMED FOR GRAVITY FLOW						
75											
76											
77											

PT LOTTE CHEMICAL INDONESIA

LINE HYDRAULIC CALCULATION SHEET (LINE WP5)

LOTTE E&C

1	PROJECT :	LINE PROJECT	JOB NO. :	15005
2	CLIENT :	PT LOTTE CHEMICAL INDONESIA	DOCU. NO. :	LINE-900-BC-4-0001
3	LOCATION :	CILEGON, INDONESIA	P&ID NO. :	REFER TO ROW NO. 10
4	UNIT :	**WP5**	CASE :	DESIGN
5	SERVICE :	**3.3 COMPRESSOR CIRCUIT**	SHEET :	6 OF 9 (COMPRESSOR CIRCUIT)

REVISION

6	**Item**		**3.3.3 ETHYLENE BOG COMPRESSOR**							
7	Line No		EL-2005	EL-2005	EL-2041	-	-	EL-2042	EL-2050	EL-2051
8		**From**	**TK-205**	**DS-205**	**D-205**	**-**	**Comp. Disch.**	**C-205 A/B**	**E-206**	**E-207**
9		**To**	**DS-205**	**D-205**	**C-205 A/B**	**Comp. Suc.**	**-**	**E-206**	**E-207**	**D-207**
10		P&ID No.	902-0008	902-0010	902-0010	902-0010	902-0010	902-0010	902-0011	902-0011
11		Piping Material Class	1S0Y	1S0Y	1S0Y	1S0Y	3L1P	3L1P	3L1P	3L1P
12		Pipe Schedule	10S	10S	10S	10S	40	40	40	40
13		Pipe Roughness (mm)	0.015	0.015	0.015	0.015	0.046	0.046	0.046	0.046
14		**Fluid**	**EL BOG**	**EL BOG**	**EL BOG**	**EL BOG**	**EL BOG**	**EL BOG**	**EL BOG**	**EL**
15	Calc Mode (L, Vu, Vd)		Vu	Vu	Vu	Vu	Vu	Vu	Vu	L
16	Temperature	: T (C)	-103.6	-103.6	-103.6	-103.6	78.1	78.1	40.0	-32.0
17	Pressure	: P (kg/cm^2G)	0.10	0.08	0.07	0.07	23.50	23.49	23.03	22.71
18	Density	@ T,P (kg/m^3)								444.4
19	Molecular	@ T,P (-)	28.05	28.05	28.05	28.05	28.05	28.05	28.05	
20	Compress. Fact.	@ T,P (-)	0.98	0.98	0.98	0.98	0.98	0.98	0.98	
21	Viscosity	@ T,P (cP)	0.01	0.01	0.01	0.01	0.01	0.01	0.01	0.07
22	C_P / C_V	@ T,P	1.31	1.31	1.31	1.31	1.31	1.31	1.31	
23	M/B Flow Rate	(kg/h)	6,000	6,000	6,000	3,000	3,000	6,000	6,000	6,000
24	Excess Ratio	(-)	1.00	1.00	1.00	1.00	1.00	1.00	1.00	1.00
25	Flow Rate	(kg/h)	6,000	6,000	6,000	3,000	3,000	6,000	6,000	6,000
26	**Line Length**	(m)	**189.5**	**30**	**22.5**	**22.5**	**22.5**	**110.4**	**14.16**	**100**
27	**Pipe Nominal Size**	(inch)	**10**	**10**	**10**	**10**	**4**	**4**	**4**	**3**
28		**Calculation Result**	**OK**	**OK**	**OK**	**OK**	**OK**	**OK**	**OK**	**OK**
29	Inlet Press.	(Input) (kg/cm^2G)	0.10	0.08	0.07	0.07	23.50	23.49	23.03	22.71
30	Inlet Press.	(Calcul'd) (kg/cm^2G)	**0.10**	**0.08**	**0.07**	**0.07**	**23.50**	**23.49**	**23.03**	**22.71**
31	Velocity	@ Inlet (m/sec)	13.38	13.64	13.69	6.86	4.29	8.58	7.79	0.79
32	Reynolds No.	@ Inlet (-)	801776.15	801776.15	801776.15	400888.08	864650.95	1729301.90	1886511.16	412581.02
33	d*V*V/2g	@ Inlet (kg/cm^2)	20.66	21.07	21.14	5.30	22.18	88.75	80.64	14.01
34	4*F*L/D	@ Inlet (-)	9.38	1.48	1.11	1.22	3.73	17.95	2.30	23.56
35	dP/100m	@ Inlet (kg/cm^2)	0.01	0.01	0.01	0.00	0.04	0.14	0.13	0.03
36	Outlet Press.	(Input) (kg/cm^2G)								
37	Outlet Press.	(Calcul'd) (kg/cm^2G)	**0.08**	**0.07**	**0.07**	**0.07**	**23.49**	**23.03**	**22.71**	**22.81**
38	**Velocity**	**@ Outlet (m/sec)**	**13.64**	**13.69**	**13.72**	**6.86**	**4.29**	**8.74**	**7.90**	**0.79**
39		Limit	60.96	60.96	60.96	60.96	76.20	76.20	76.20	1.80
40	Sonic Velocity	@ Outlet (m/sec)	253.25	253.25	253.25	253.25	364.51	364.51	344.17	
41	Mach No.	@ Outlet (-)	0.05	0.05	0.05	0.03	0.01	0.02	0.02	
42	Reynolds No.	@ Outlet (-)	801776.15	801776.15	801776.15	400888.08	864650.95	1729301.90	1886511.16	412581.02
43	d*V*V/2g	@ Outlet (kg/cm^2)	21.07	21.14	21.18	5.30	22.19	90.45	81.72	14.01
44	4*F*L/D	@ Outlet (-)	9.38	1.48	1.11	1.22	3.73	17.95	2.30	23.56
45	**dP/100m**	**@ Outlet (kg/cm^2)**	**0.010**	**0.010**	**0.010**	**0.003**	**0.037**	**0.147**	**0.133**	**0.033**
46		Limit	0.035	0.035	0.120	0.120	0.230	0.230	0.230	0.120
47	**Straight Pipe dP**	(kg/cm^2)	**0.020**	**0.003**	**0.002**	**0.001**	**0.008**	**0.161**	**0.019**	**0.033**
48	dP of Control Valve	(kg/cm^2)								
49	dP of Heat Exchanger	(kg/cm^2)						0.3	0.3	
50	dP of Column	(kg/cm^2)								
51	dP of Strainer	(kg/cm^2)								
52	dP of Orifice	(kg/cm^2)								
53	Other dP	(kg/cm^2)								
54	Static Head	(m)								-2.98
55		(kg/cm^2)								-0.132
56	**Equip dP**	(kg/cm^2)						**0.300**	**0.300**	**-0.132**
57	Pipe Entrance									
58	Pipe Exit									
59	90 Elbow		6							
60	Tee									
61	Globe Valve									
62	Gate Valve		1	1		1	1			1
63	Check Valve									
64	Butterfly Valve									
65	Ball valve									
66	Contraction					1				
67	Enlargement						1			
68	Other's K									
69	**Sum (Ki)**		1.257	0.117		0.433	0.419			0.147
70	**Fitting dP**	(kg/cm^2)	**0.003**	**0.000**		**0.000**	**0.001**			**0.000**
71	**Total dP**	(kg/cm^2)	**0.022**	**0.003**	**0.002**	**0.001**	**0.009**	**0.461**	**0.319**	**-0.099**
72	**Remarks**									
73–77			COMPRESSOR DESIGN FLOWRATE	COMPRESSOR DESIGN FLOWRATE	COMPRESSOR DESIGN FLOWRATE	COMPRESSOR DESIGN FLOWRATE	COMPRESSOR DESIGN FLOWRATE	COMPRESSOR DESIGN FLOWRATE	COMPRESSOR DESIGN FLOWRATE	COMPRESSOR DESIGN FLOWRATE

PT LOTTE CHEMICAL INDONESIA

LINE HYDRAULIC CALCULATION SHEET (LINE WP5)

LOTTE E&C

1	PROJECT :	LINE PROJECT	JOB NO. :	15005
2	CLIENT :	PT LOTTE CHEMICAL INDONESIA	DOCU. NO. :	LINE-900-BC-4-0001
3	LOCATION :	CILEGON, INDONESIA	P&ID NO. :	REFER TO ROW NO. 10
4	UNIT :	**WP5**	CASE :	DESIGN
5	SERVICE :	**3.3 COMPRESSOR CIRCUIT**	SHEET :	7 OF 9 (COMPRESSOR CIRCUIT)

REVISION

6	**Item**			**3.3.3 ETHYLENE BOG COMPRESSOR**							
7	Line No			EL-2053	EL-2055	EL-2054	EL-2063	EL-2044			
8		**From**		**D-207**	**LV-2018**	**D-207**	**C-205A/B**	**D-205**			
9		**To**		**LV-2018**	**E-205 Outlet**	**DS-205**	**DS-205**	**FLARE**			
10		P&ID No.		902-0011	902-0011	902-0011	902-0010	902-0010			
11		Piping Material Class		3L1P	3L1P	3L1P	1S0Y	1S0Y			
12		Pipe Schedule		40	40	40	10S	10S			
13		Pipe Roughness (mm)		0.046	0.046	0.046	0.015	0.015			
14		**Fluid**		**EL**	**EL**	**EL**	**EL BOG**	**EL**			
15	Calc Mode (L, Vu, Vd)			L	L	L	Vd	L			
16	Temperature	: T	(C)	-32.0	-32.0	-32.0	-103.6	-103.6			
17	Pressure	: P	(kg/cm^2G)	22.90	21.85	22.90	0.03	0.03			
18	Density	@ T,P	(kg/m^3)	444.4	444.4	444.4		444.4			
19	Molecular	@ T,P	(-)				28.05				
20	Compress. Fact.	@ T,P	(-)				0.98				
21	Viscosity	@ T,P	(cP)	0.07	0.07	0.07	0.01	0.07			
22	C_P / C_V	@ T,P					1.31				
23	M/B Flow Rate		(kg/h)	6,000	6,000	2,500	6,000	4,300			
24	Excess Ratio		(-)	1.00	1.00	1.00	1.00	1.00			
25	Flow Rate		(kg/h)	6,000	6,000	2,500	6,000	4,300			
26	**Line Length**		(m)	**12**	**36**	**100**	**100**	**100**			
27	**Pipe Nominal Size**		(inch)	**3**	**3**	**2**	**8**	**2**			
28		**Calculation Result**		**OK**	**OK**	**OK**	**OK**	**OK**			
29	Inlet Press.	(Input)	(kg/cm^2G)	22.90	21.85	22.90		0.03			
30	Inlet Press.	(Calcul'd)	(kg/cm^2G)	**22.90**	**21.85**	**22.90**	**0.06**	**0.03**			
31	Velocity	@ Inlet	(m/sec)	0.79	0.79	0.72	21.63	1.14			
32	Reynolds No.	@ Inlet	(-)	412581.02	412581.02	255178.08	835878.30	420561.80			
33	d*V*V/2g	@ Inlet	(kg/cm^2)	14.01	14.01	11.81	52.29	29.45			
34	4*F*L/D	@ Inlet	(-)	2.83	8.48	38.54	6.26	29.72			
35	dP/100m	@ Inlet	(kg/cm^2)	0.03	0.03	0.05	0.03	0.09			
36	Outlet Press.	(Input)	(kg/cm^2G)				0.03				
37	Outlet Press.	(Calcul'd)	(kg/cm^2G)	**21.85**	**21.53**	**22.85**	**0.03**	**-0.06**			
38	**Velocity**	**@ Outlet**	**(m/sec)**	**0.79**	**0.79**	**0.72**	**22.31**	**1.14**			
39			Limit	1.80	1.80	1.80	76.20	2.40			
40	Sonic Velocity	@ Outlet	(m/sec)				253.25				
41	Mach No.	@ Outlet	(-)				0.09				
42	Reynolds No.	@ Outlet	(-)	412581.02	412581.02	255178.08	835878.30	420561.80			
43	d*V*V/2g	@ Outlet	(kg/cm^2)	14.01	14.01	11.81	53.94	29.45			
44	4*F*L/D	@ Outlet	(-)	2.83	8.48	38.54	6.26	29.72			
45	**dP/100m**	**@ Outlet**	**(kg/cm^2)**	**0.033**	**0.033**	**0.046**	**0.034**	**0.088**			
46			Limit	0.120	0.120	0.120	0.230	0.090			
47	**Straight Pipe dP**		(kg/cm^2)	**0.004**	**0.012**	**0.046**	**0.034**	**0.088**			
48	dP of Control Valve		(kg/cm^2)	1.1							
49	dP of Heat Exchanger		(kg/cm^2)								
50	dP of Column		(kg/cm^2)								
51	dP of Strainer		(kg/cm^2)								
52	dP of Orifice		(kg/cm^2)								
53	Other dP		(kg/cm^2)								
54	Static Head		(m)	-1.2	6.9						
55			(kg/cm^2)	-0.053	0.307						
56	**Equip dP**		(kg/cm^2)	**1.047**	**0.307**						
57	Pipe Entrance										
58	Pipe Exit										
59	90 Elbow										
60	Tee										
61	Globe Valve										
62	Gate Valve			2	2						
63	Check Valve				1						
64	Butterfly Valve										
65	Ball valve										
66	Contraction				1						
67	Enlargement										
68	Other's K										
69	**Sum (Ki)**			0.294	2.071						
70	**Fitting dP**		(kg/cm^2)	**0.000**	**0.003**						
71	**Total dP**		(kg/cm^2)	**1.051**	**0.321**	**0.046**	**0.034**	**0.088**			
72	**Remarks**										
73											
74				COMPRESSOR DESIGN FLOWRATE	COMPRESSOR DESIGN FLOWRATE	DESUPERHEATER DESIGN FLOWRATE	DESUPERHEATER DESIGN FLOWRATE	FLOWRATE ASSUMED FOR GRAVITY FLOW			
75											
76											
77											

PT LOTTE CHEMICAL INDONESIA

LINE HYDRAULIC CALCULATION SHEET (LINE WP5)

LOTTE E&C

1	PROJECT :	LINE PROJECT	JOB NO. :	15005
2	CLIENT :	PT LOTTE CHEMICAL INDONESIA	DOCU. NO. :	LINE-900-BC-4-0001
3	LOCATION :	CILEGON, INDONESIA	P&ID NO. :	REFER TO ROW NO. 10
4	UNIT :	**WP5**	CASE :	DESIGN
5	SERVICE :	**3.3 COMPRESSOR CIRCUIT**	SHEET :	8 OF 9 (COMPRESSOR CIRCUIT)

REVISION

6	**Item**			**3.3.4 PROPYLENE BOG COMPRESSOR**						
7	Line No			PL-2007	PL-2007	PL-2041	-	-	PL-2042	PL-2050
8		**From**		**TK-208**	**DS-208**	**D-208**	**-**	**Comp. Disch.**	**C-208 A/B**	**E-209**
9		**To**		**DS-208**	**D-208**	**C-208 A/B**	**Comp. Suc.**	**-**	**E-209**	**D-209**
10		P&ID No.		902-0012	902-0014	902-0014	902-0014	902-0014	902-0014	902-0015
11		Piping Material Class		1L1P	1L1P	1L1P	1L1P	3L1P	3L1P	3L1P
12		Pipe Schedule		40	40	40	40	40	40	40
13		Pipe Roughness (mm)		0.046	0.046	0.046	0.046	0.046	0.046	0.046
14		**Fluid**		**PL BOG**	**PL BOG**	**PL BOG**	**PL BOG**	**PL BOG**	**PL BOG**	**PL**
15	Calc Mode (L, Vu, Vd)			Vu	Vu	Vu	Vu	Vu	Vu	L
16	Temperature	: T	(C)	-46.9	-46.9	-46.4	-46.4	117.0	117.0	44.0
17	Pressure	: P	(kg/cm^2G)	0.10	0.08	0.07	0.07	21.00	20.99	20.58
18	Density	@ T,P	(kg/m^3)							473.0
19	Molecular	@ T,P	(-)	42.08	42.08	42.08	42.08	42.08	42.08	
20	Compress. Fact.	@ T,P	(-)	0.97	0.97	0.97	0.97	0.97	0.97	
21	Viscosity	@ T,P	(cP)	0.01	0.01	0.01	0.01	0.01	0.01	0.05
22	C_P / C_V	@ T,P		1.20	1.20	1.20	1.20	1.20	1.20	
23	M/B Flow Rate		(kg/h)	3,200	3,200	3,200	1,600	1,600	3,200	3,200
24	Excess Ratio		(-)	1.00	1.00	1.00	1.00	1.00	1.00	1.00
25	Flow Rate		(kg/h)	3,200	3,200	3,200	1,600	1,600	3,200	3,200
26	**Line Length**		(m)	**173**	**30**	**22.5**	**22.5**	**22.5**	**82.5**	**100**
27	**Pipe Nominal Size**		(inch)	**8**	**8**	**8**	**6**	**3**	**3**	**3**
28		**Calculation Result**		**OK**	**OK**	**OK**	**OK**	**OK**	**OK**	**OK**
29	Inlet Press.	(Input)	(kg/cm^2G)	0.10	0.08	0.07	0.07	21.00	20.99	20.58
30	Inlet Press.	(Calcul'd)	(kg/cm^2G)	**0.10**	**0.08**	**0.07**	**0.07**	**21.00**	**20.99**	**20.58**
31	Velocity	@ Inlet	(m/sec)	10.75	10.97	11.03	9.57	3.23	6.45	0.39
32	Reynolds No.	@ Inlet	(-)	558290.17	558290.17	558290.17	367337.18	605118.82	1210237.65	279285.61
33	d*V*V/2g	@ Inlet	(kg/cm^2)	15.10	15.40	15.49	11.64	15.33	61.33	3.74
34	4*F*L/D	@ Inlet	(-)	13.26	2.30	1.72	2.43	5.21	18.74	24.11
35	dP/100m	@ Inlet	(kg/cm^2)	0.01	0.01	0.01	0.01	0.04	0.14	0.01
36	Outlet Press.	(Input)	(kg/cm^2G)							
37	Outlet Press.	(Calcul'd)	(kg/cm^2G)	**0.08**	**0.07**	**0.07**	**0.07**	**20.99**	**20.58**	**20.70**
38	**Velocity**	**@ Outlet**	**(m/sec)**	**10.97**	**11.00**	**11.06**	**9.61**	**3.23**	**6.58**	**0.39**
39			Limit	60.96	60.96	60.96	60.96	76.20	76.20	1.80
40	Sonic Velocity	@ Outlet	(m/sec)	228.07	228.07	228.32	228.32	299.49	299.49	
41	Mach No.	@ Outlet	(-)	0.05	0.05	0.05	0.04	0.01	0.02	
42	Reynolds No.	@ Outlet	(-)	558290.17	558290.17	558290.17	367337.18	605118.82	1210237.65	279285.61
43	d*V*V/2g	@ Outlet	(kg/cm^2)	15.40	15.45	15.52	11.68	15.33	62.51	3.74
44	4*F*L/D	@ Outlet	(-)	13.26	2.30	1.72	2.43	5.21	18.74	24.11
45	**dP/100m**	**@ Outlet**	**(kg/cm^2)**	**0.012**	**0.012**	**0.012**	**0.013**	**0.036**	**0.142**	**0.009**
46			Limit	0.035	0.035	0.120	0.120	0.230	0.230	0.120
47	**Straight Pipe dP**		(kg/cm^2)	**0.020**	**0.004**	**0.003**	**0.003**	**0.008**	**0.116**	**0.009**
48	dP of Control Valve		(kg/cm^2)							
49	dP of Heat Exchanger		(kg/cm^2)						0.3	
50	dP of Column		(kg/cm^2)							
51	dP of Strainer		(kg/cm^2)							
52	dP of Orifice		(kg/cm^2)							
53	Other dP		(kg/cm^2)							
54	Static Head		(m)							-2.9
55			(kg/cm^2)							-0.137
56	**Equip dP**		(kg/cm^2)						**0.300**	**-0.137**
57	Pipe Entrance									
58	Pipe Exit									
59	90 Elbow			6						
60	Tee									
61	Globe Valve									
62	Gate Valve			1	1		1	1		1
63	Check Valve									
64	Butterfly Valve									
65	Ball valve									
66	Contraction						1			
67	Enlargement									
68	Other's K									
69	**Sum (Ki)**			1.398	0.121		0.926	0.147		0.147
70	**Fitting dP**		(kg/cm^2)	**0.002**	**0.000**		**0.001**	**0.000**		**0.000**
71	**Total dP**		(kg/cm^2)	**0.022**	**0.004**	**0.003**	**0.004**	**0.008**	**0.416**	**-0.128**
72	**Remarks**									
73										
74				COMPRESSOR DESIGN FLOWRATE	COMPRESSOR DESIGN FLOWRATE	COMPRESSOR DESIGN FLOWRATE	COMPRESSOR DESIGN FLOWRATE	COMPRESSOR DESIGN FLOWRATE	COMPRESSOR DESIGN FLOWRATE	COMPRESSOR DESIGN FLOWRATE
75										
76										
77										

PT LOTTE CHEMICAL INDONESIA

LINE HYDRAULIC CALCULATION SHEET (LINE WP5)

LOTTE E&C

1	PROJECT :	LINE PROJECT	JOB NO. :	15005
2	CLIENT :	PT LOTTE CHEMICAL INDONESIA	DOCU. NO. :	LINE-900-BC-4-0001
3	LOCATION :	CILEGON, INDONESIA	P&ID NO. :	REFER TO ROW NO. 10
4	UNIT :	**WP5**	CASE :	DESIGN
5	SERVICE :	**3.3 COMPRESSOR CIRCUIT**	SHEET :	9 OF 9 (COMPRESSOR CIRCUIT)

REVISION

6	**Item**			**3.3.4 PROPYLENE BOG COMPRESSOR**							
7	Line No			PL-2055	PL-2055	PL-2061	PL-2037	PL-2043			
8		**From**		**D-209**	**LV-2024**	**D-209**	**C-208A/B**	**D-208**			
9		**To**		**LV-2024**	**E-208 outlet**	**DS-208**	**DS-208**	**FLARE**			
10		P&ID No.		902-0015	902-0015	902-0015	902-0014	902-0014			
11		Piping Material Class		3L1P	3L1P	3L1P	1L1P	1L1P			
12		Pipe Schedule		40	40	40	40	40			
13		Pipe Roughness (mm)		0.046	0.046	0.046	0.046	0.046			
14		**Fluid**		**PL**	**PL**	**PL**	**PL**	**PL**			
15	Calc Mode (L, Vu, Vd)			L	L	L	Vd	L			
16	Temperature	: T	(C)	44.0	44.0	44.0	-46.4	-46.4			
17	Pressure	: P	(kg/cm^2G)	20.70	19.82	20.70	0.03	0.03			
18	Density	@ T,P	(kg/m^3)	473.0	473.0	473.0		473.0			
19	Molecular	@ T,P	(-)				42.08				
20	Compress. Fact.	@ T,P	(-)				0.97				
21	Viscosity	@ T,P	(cP)	0.05	0.05	0.05	0.01	0.05			
22	C_P / C_V	@ T,P					1.20				
23	M/B Flow Rate		(kg/h)	3,200	3,200	1,500	3,200	3,600			
24	Excess Ratio		(-)	1.00	1.00	1.00	1.00	1.00			
25	Flow Rate		(kg/h)	3,200	3,200	1,500	3,200	3,600			
26	**Line Length**		(m)	**12**	**32.4**	**100**	**100**	**100**			
27	**Pipe Nominal Size**		(inch)	**3**	**2**	**2**	**6**	**2**			
28		**Calculation Result**		**OK**	**OK**	**OK**	**OK**	**OK**			
29	Inlet Press.	(Input)	(kg/cm^2G)	20.70	19.82	20.70		0.03			
30	Inlet Press.	(Calcul'd)	(kg/cm^2G)	**20.70**	**19.82**	**20.70**	**0.08**	**0.03**			
31	Velocity	@ Inlet	(m/sec)	0.39	0.87	0.41	19.00	0.98			
32	Reynolds No.	@ Inlet	(-)	279285.61	414566.24	194327.93	612228.63	466387.02			
33	d*V*V/2g	@ Inlet	(kg/cm^2)	3.74	18.17	3.99	46.20	23.00			
34	4*F*L/D	@ Inlet	(-)	2.89	12.22	39.19	10.42	37.55			
35	dP/100m	@ Inlet	(kg/cm^2)	0.01	0.07	0.02	0.05	0.09			
36	Outlet Press.	(Input)	(kg/cm^2G)				0.03				
37	Outlet Press.	(Calcul'd)	(kg/cm^2G)	**19.82**	**19.43**	**20.68**	**0.03**	**-0.06**			
38	**Velocity**	**@ Outlet**	**(m/sec)**	**0.39**	**0.87**	**0.41**	**19.89**	**0.98**			
39			Limit	1.80	1.80	1.80	76.20	2.40			
40	Sonic Velocity	@ Outlet	(m/sec)				228.32				
41	Mach No.	@ Outlet	(-)				0.09				
42	Reynolds No.	@ Outlet	(-)	279285.61	414566.24	194327.93	612228.63	466387.02			
43	d*V*V/2g	@ Outlet	(kg/cm^2)	3.74	18.17	3.99	48.35	23.00			
44	4*F*L/D	@ Outlet	(-)	2.89	12.22	39.19	10.42	37.55			
45	**dP/100m**	**@ Outlet**	**(kg/cm^2)**	**0.009**	**0.069**	**0.016**	**0.050**	**0.086**			
46			Limit	0.120	0.120	0.120	0.230	0.090			
47	**Straight Pipe dP**		(kg/cm^2)	**0.001**	**0.022**	**0.016**	**0.050**	**0.086**			
48	dP of Control Valve		(kg/cm^2)	0.96							
49	dP of Heat Exchanger		(kg/cm^2)								
50	dP of Column		(kg/cm^2)								
51	dP of Strainer		(kg/cm^2)								
52	dP of Orifice		(kg/cm^2)								
53	Other dP		(kg/cm^2)								
54	Static Head		(m)	-1.6	7.7						
55			(kg/cm^2)	-0.076	0.364						
56	**Equip dP**		(kg/cm^2)	**0.882**	**0.364**						
57	Pipe Entrance										
58	Pipe Exit										
59	90 Elbow										
60	Tee										
61	Globe Valve										
62	Gate Valve			2	2						
63	Check Valve				1						
64	Butterfly Valve										
65	Ball valve										
66	Contraction										
67	Enlargement										
68	Other's K										
69	**Sum (Ki)**			0.294	1.243						
70	**Fitting dP**		(kg/cm^2)	**0.000**	**0.002**						
71	**Total dP**		(kg/cm^2)	**0.884**	**0.389**	**0.016**	**0.050**	**0.086**			
72	**Remarks**										
73											
74				COMPRESSOR DESIGN FLOWRATE	COMPRESSOR DESIGN FLOWRATE	DESUPERHEATER DESIGN FLOWRATE	DESUPERHEATER DESIGN FLOWRATE	FLOWRATE ASSUMED FOR GRAVITY FLOW			
75											
76											
77											

LINE HYDRAULIC CALCULATION SHEET
(LINE WP5)

PT LOTTE CHEMICAL INDONESIA

LOTTE E&C

PROJECT :	LINE PROJECT	JOB NO. :	15005
CLIENT :	PT LOTTE CHEMICAL INDONESIA	DOCU. NO. :	LINE-900-BC-4-0001
LOCATION :	CILEGON, INDONESIA	P&ID NO. :	REFER TO ROW NO. 10
UNIT :	**WP5**	CASE :	DESIGN
SERVICE :	**3.4 REFRIGERANT**	SHEET :	1 OF 3 (REFRIGERANT)

REVISION

SYSTEM SKETCH

3.4.1 REFRIGERANT TO E-207

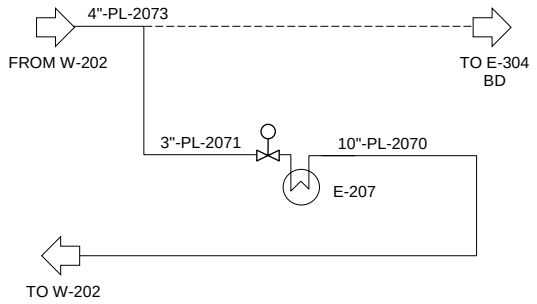

3.4.2 REFRIGERANT TO E-304

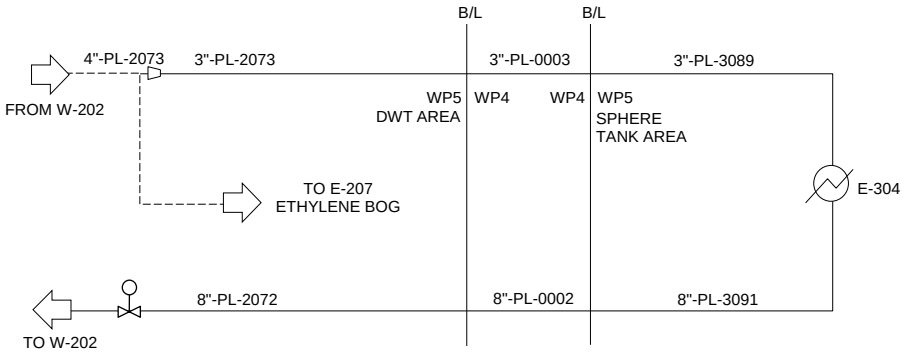

PT LOTTE CHEMICAL INDONESIA

LINE HYDRAULIC CALCULATION SHEET (LINE WP5)

LOTTE E&C

1	PROJECT :	LINE PROJECT			JOB NO. :	15005					REVISION
2	CLIENT :	PT LOTTE CHEMICAL INDONESIA			DOCU. NO. :	LINE-900-BC-4-0001					
3	LOCATION :	CILEGON, INDONESIA			P&ID NO. :	REFER TO ROW NO. 10					
4	UNIT :	**WP5**			CASE :	DESIGN					
5	SERVICE :	**3.4 REFRIGERANT**			SHEET :	2 OF 3 (REFRIGERANT)					
6	**Item**		**3.4.1 REFRIGERANT TO E-207**								
7	Line No		PL-2073	PL-2071	PL-2070						
8		**From**	**W-202**	**W-202**	**LV-2014 / E-207**						
9		**To**	**E-207 / E-304**	**LV-2014 / E-207**	**W-202**						
10		P&ID No.	902-0016	902-0011	902-0011						
11		Piping Material Class	3L1P	3L1P	3L1P						
12		Pipe Schedule	40	40	40						
13		Pipe Roughness (mm)	0.046	0.046	0.046						
14		**Fluid**	**PROPYLENE**	**PROPYLENE**	**PROPYLENE**						
15	Calc Mode (L, Vu, Vd)		L	L	Vu						
16	Temperature	: T (C)	-8.3	-8.3	-40.0						
17	Pressure	: P (kg/cm^2G)	17.80	17.78	0.45						
18	Density	@ T,P (kg/m^3)	564.5	564.5	3.2						
19	Molecular	@ T,P (-)									
20	Compress. Fact.	@ T,P (-)									
21	Viscosity	@ T,P (cP)	0.12	0.12	0.01						
22	C_P / C_V	@ T,P									
23	M/B Flow Rate	(kg/h)	14,407	8,126	8,126						
24	Excess Ratio	(-)	1.00	1.00	1.00						
25	Flow Rate	(kg/h)	14,407	8,126	8,126						
26	**Line Length**	(m)	**50**	**81.6**	**81.6**						
27	**Pipe Nominal Size**	(inch)	**4**	**3**	**10**						
28		**Calculation Result**	**OK**	**OK**	**OK**						
29	Inlet Press.	(Input) (kg/cm^2G)	17.80	17.78	0.45						
30	Inlet Press.	(Calcul'd) (kg/cm^2G)	**17.80**	**17.78**	**0.45**						
31	Velocity	@ Inlet (m/sec)	0.86	0.84	13.87						
32	Reynolds No.	@ Inlet (-)	426230.76	315483.02	1613215.13						
33	d*V*V/2g	@ Inlet (kg/cm^2)	21.44	20.23	31.37						
34	4*F*L/D	@ Inlet (-)	8.55	19.52	4.53						
35	dP/100m	@ Inlet (kg/cm^2)	0.04	0.05	0.02						
36	Outlet Press.	(Input) (kg/cm^2G)									
37	Outlet Press.	(Calcul'd) (kg/cm^2G)	**17.78**	**0.45**	**0.43**						
38	**Velocity**	**@ Outlet (m/sec)**	**0.86**	**0.84**	**14.00**						
39		Limit	1.20	1.20	18.30						
40	Sonic Velocity	@ Outlet (m/sec)			0.00						
41	Mach No.	@ Outlet (-)									
42	Reynolds No.	@ Outlet (-)	426230.76	315483.02	1613215.13						
43	d*V*V/2g	@ Outlet (kg/cm^2)	21.44	20.23	31.67						
44	4*F*L/D	@ Outlet (-)	8.55	19.52	4.53						
45	**dP/100m**	**@ Outlet (kg/cm^2)**	**0.037**	**0.048**	**0.018**						
46		Limit	0.090	0.090	0.035						
47	**Straight Pipe dP**	(kg/cm^2)	**0.018**	**0.039**	**0.014**						
48	dP of Control Valve	(kg/cm^2)		17.0							
49	dP of Heat Exchanger	(kg/cm^2)									
50	dP of Column	(kg/cm^2)									
51	dP of Strainer	(kg/cm^2)									
52	dP of Orifice	(kg/cm^2)		0.2							
53	Other dP	(kg/cm^2)		0.095							
54	Static Head	(m)									
55		(kg/cm^2)									
56	**Equip dP**	(kg/cm^2)		**17.295**							
57	Pipe Entrance										
58	Pipe Exit										
59	90 Elbow										
60	Tee										
61	Globe Valve										
62	Gate Valve										
63	Check Valve										
64	Butterfly Valve										
65	Ball valve										
66	Contraction										
67	Enlargement										
68	Other's K										
69	**Sum (Ki)**										
70	**Fitting dP**	(kg/cm^2)									
71	**Total dP**	(kg/cm^2)	**0.018**	**17.334**	**0.014**						
72	**Remarks**		FLOWRATE BY PACKAGE VENDOR	FLOWRATE BY PACKAGE VENDOR OTHER DP FOR 2 PHASE LINE	FLOWRATE BY PACKAGE VENDOR						
73											
74											
75											
76											
77											

PT LOTTE CHEMICAL INDONESIA

LINE HYDRAULIC CALCULATION SHEET (LINE WP5)

LOTTE E&C

1	PROJECT :	LINE PROJECT	JOB NO. :	15005
2	CLIENT :	PT LOTTE CHEMICAL INDONESIA	DOCU. NO. :	LINE-900-BC-4-0001
3	LOCATION :	CILEGON, INDONESIA	P&ID NO. :	REFER TO ROW NO. 10
4	UNIT :	**WP5**	CASE :	DESIGN
5	SERVICE :	**3.4 REFRIGERANT**	SHEET :	3 OF 3 (REFRIGERANT)

REVISION

	Item			3.4.2 REFRIGERANT TO E-304							
7	Line No			PL-2073	PL-0003	PL-3089	PL-3091	PL-0002	PL-2072		
8		**From**		**W-202**	**WP5 BL (DWT)**	**WP5 BL (SPT)**	**LV-3004 (E-304)**	**WP5 BL (SPT)**	**WP5 BL (DWT)**		
9		**To**		**WP5 BL (DWT)**	**WP5 BL (SPT)**	**LV-3004 (E-304)**	**WP5 BL (SPT)**	**WP5 BL (DWT)**	**W-202**		
10		P&ID No.		902-0016	903-0007	903-0007	903-0007	902-0016	902-0016		
11		Piping Material Class		3L1P	3L1P	3L1P	3L1P	3L1P	3L1P		
12		Pipe Schedule		40	40	40	40	40	40		
13		Pipe Roughness (mm)		0.046	0.046	0.046	0.046	0.046	0.046		
14		**Fluid**		**PROPYLENE**	**PROPYLENE**	**PROPYLENE**	**PROPYLENE**	**PROPYLENE**	**PROPYLENE**		
15	Calc Mode (L, Vu, Vd)			L	L	L	Vu	Vu	Vu		
16	Temperature	: T	(C)	-8.3	-8.3	-8.3	-9.7	-9.7	-9.7		
17	Pressure	: P	(kg/cm^2G)	17.78	17.74	17.58	3.60	3.49	3.42		
18	Density	@ T,P	(kg/m^3)	564.5	564.5	564.5	9.1	9.1	9.1		
19	Molecular	@ T,P	(-)								
20	Compress. Fact.	@ T,P	(-)								
21	Viscosity	@ T,P	(cP)	0.12	0.12	0.12	0.01	0.01	0.01		
22	C_P / C_V	@ T,P									
23	M/B Flow Rate		(kg/h)	6,280	6,280	6,280	6,280	6,280	6,280		
24	Excess Ratio		(-)	1.00	1.00	1.00	1.00	1.00	1.00		
25	Flow Rate		(kg/h)	6,280	6,280	6,280	6,280	6,280	6,280		
26	**Line Length**		(m)	**156**	**516**	**108**	**108**	**516**	**156**		
27	**Pipe Nominal Size**		(inch)	**3**	**3**	**3**	**8**	**8**	**8**		
28		**Calculation Result**		**OK**	**OK**	**OK**	**OK**	**OK**	**OK**		
29	Inlet Press.	(Input)	(kg/cm^2G)	17.78	17.74	17.58	3.60	3.49	3.42		
30	Inlet Press.	(Calcul'd)	(kg/cm^2G)	**17.78**	**17.74**	**17.58**	**3.60**	**3.49**	**3.42**		
31	Velocity	@ Inlet	(m/sec)	0.65	0.65	0.65	5.92	5.92	5.92		
32	Reynolds No.	@ Inlet	(-)	243817.98	243817.98	243817.98	1369614.46	1369614.46	1369614.46		
33	d*V*V/2g	@ Inlet	(kg/cm^2)	12.08	12.08	12.08	16.31	16.31	16.31		
34	4*F*L/D	@ Inlet	(-)	37.97	125.59	26.29	7.86	37.54	11.35		
35	dP/100m	@ Inlet	(kg/cm^2)	0.03	0.03	0.03	0.01	0.01	0.01		
36	Outlet Press.	(Input)	(kg/cm^2G)								
37	Outlet Press.	(Calcul'd)	(kg/cm^2G)	**17.74**	**17.58**	**3.60**	**3.49**	**3.42**	**3.41**		
38	**Velocity**	**@ Outlet**	**(m/sec)**	**0.65**	**0.65**	**0.65**	**6.07**	**6.00**	**5.94**		
39			Limit	1.20	1.20	1.20	18.30	18.30	18.30		
40	Sonic Velocity	@ Outlet	(m/sec)				0.00	0.00	0.00		
41	Mach No.	@ Outlet	(-)								
42	Reynolds No.	@ Outlet	(-)	243817.98	243817.98	243817.98	1369614.46	1369614.46	1369614.46		
43	d*V*V/2g	@ Outlet	(kg/cm^2)	12.08	12.08	12.08	16.72	16.54	16.38		
44	4*F*L/D	@ Outlet	(-)	37.97	125.59	26.29	7.86	37.54	11.35		
45	**dP/100m**	**@ Outlet**	**(kg/cm^2)**	**0.029**	**0.029**	**0.029**	**0.012**	**0.012**	**0.012**		
46			Limit	0.090	0.090	0.090	0.035	0.035	0.035		
47	**Straight Pipe dP**		(kg/cm^2)	**0.046**	**0.152**	**0.032**	**0.013**	**0.062**	**0.019**		
48	dP of Control Valve		(kg/cm^2)			13.8					
49	dP of Heat Exchanger		(kg/cm^2)				0.1				
50	dP of Column		(kg/cm^2)								
51	dP of Strainer		(kg/cm^2)								
52	dP of Orifice		(kg/cm^2)			0.2					
53	Other dP		(kg/cm^2)			0.003					
54	Static Head		(m)								
55			(kg/cm^2)								
56	**Equip dP**		(kg/cm^2)			**13.953**	**0.100**				
57	Pipe Entrance										
58	Pipe Exit										
59	90 Elbow										
60	Tee										
61	Globe Valve										
62	Gate Valve										
63	Check Valve										
64	Butterfly Valve										
65	Ball valve										
66	Contraction										
67	Enlargement										
68	Other's K										
69	**Sum (Ki)**										
70	**Fitting dP**		(kg/cm^2)								
71	**Total dP**		(kg/cm^2)	**0.046**	**0.152**	**13.985**	**0.113**	**0.062**	**0.019**		
72	**Remarks**										
73–77				FLOWRATE BY PACKAGE VENDOR	FLOWRATE BY PACKAGE VENDOR	FLOWRATE BY PACKAGE VENDOR, OTHER DP FOR 2 PHASE LINE	FLOWRATE BY PACKAGE VENDOR	FLOWRATE BY PACKAGE VENDOR	FLOWRATE BY PACKAGE VENDOR		

PT LOTTE CHEMICAL INDONESIA

LINE HYDRAULIC CALCULATION SHEET (LINE WP5)

LOTTE E&C

1	PROJECT :	LINE PROJECT	JOB NO. :	15005
2	CLIENT :	PT LOTTE CHEMICAL INDONESIA	DOCU. NO. :	LINE-900-BC-4-0001
3	LOCATION :	CILEGON, INDONESIA	P&ID NO. :	REFER TO ROW NO. 10
4	UNIT :	**WP5**	CASE :	DESIGN
5	SERVICE :	**3.5 VENT FROM TANK**	SHEET :	1 OF 7 (VENT FROM TANK)

REVISION

	Item			C3 LPG FROM TK-201		C3 LPG FROM D-202					
7	Line No			LPG-2027	FL-2003	LPG-2054	LPG-2055	LPG-2056	FL-2032		
8		**From**		**TK-201**	**PV-2004**	**D-202**	**PV-2013A**	**D-202**	**PV-2013B**		
9		**To**		**PV-2004**	**FLARE**	**PV-2013A**	**FG SYSTEM**	**PV-2013B**	**FLARE**		
10		P&ID No.		902-0001	902-0001	902-0004	902-0004	902-0004	902-0004		
11		Piping Material Class		1L1P	1S0Y	3L1P	1C1P	3L1P	1L1P		
12		Pipe Schedule		40	10S	80	40	80	40		
13		Pipe Roughness (mm)		0.046	0.015	0.046	0.046	0.046	0.046		
14		**Fluid**		**C3 LPG VAP.**	**C3 LPG VAP.**	**C3 LPG VAP.**	**C3 LPG VAP.**	**C3 LPG VAP.**	**C3 LPG VAP.**		
15	Calc Mode (L, Vu, Vd)			Vu	Vd	Vu	Vd	Vu	Vd		
16	Temperature	: T	(C)	-43.6	-43.6	44.0	25.3	44.0	21.7		
17	Pressure	: P	(kg/cm^2G)	0.12	0.00	20.70	3.50	20.70	0.10		
18	Density	@ T,P	(kg/m^3)								
19	Molecular	@ T,P	(-)	42.95	42.95	30.05	30.05	30.05	30.05		
20	Compress. Fact.	@ T,P	(-)	0.97	0.97	0.84	0.96	0.84	0.99		
21	Viscosity	@ T,P	(cP)	0.02	0.02	0.01	0.01	0.01	0.01		
22	C_P / C_V	@ T,P		1.17	1.17	1.33	1.21	1.33	1.20		
23	M/B Flow Rate		(kg/h)	7,491	7,491	581	791	581	581		
24	Excess Ratio		(-)	1.10	1.10	1.10	1.10	1.10	1.10		
25	Flow Rate		(kg/h)	8,240	8,240	639	870	639	639		
26	**Line Length**		(m)	**100**	**100**	**100**	**100**	**100**	**100**		
27	**Pipe Nominal Size**		(inch)	**10**	**10**	**1.5**	**3**	**1.5**	**4**		
28		**Calculation Result**		**OK**	**OK**	**OK**	**OK**	**OK**	**OK**		
29	Inlet Press.	(Input)	(kg/cm^2G)	0.12		20.70		20.70			
30	Inlet Press.	(Calcul'd)	(kg/cm^2G)	**0.12**	**0.02**	**20.70**	**3.55**	**20.70**	**0.13**		
31	Velocity	@ Inlet	(m/sec)	17.12	17.34	5.38	8.95	5.39	15.30		
32	Reynolds No.	@ Inlet	(-)	572537.90	550559.64	549321.62	414012.81	549595.80	237412.45		
33	d*V*V/2g	@ Inlet	(kg/cm^2)	39.27	36.79	42.75	23.13	42.79	16.87		
34	4*F*L/D	@ Inlet	(-)	5.92	5.19	55.22	23.56	55.22	17.86		
35	dP/100m	@ Inlet	(kg/cm^2)	0.02	0.02	0.24	0.05	0.24	0.03		
36	Outlet Press.	(Input)	(kg/cm^2G)		0.00		3.50		0.10		
37	Outlet Press.	(Calcul'd)	(kg/cm^2G)	**0.10**		**20.46**	**3.50**	**20.46**	**0.10**		
38	**Velocity**	**@ Outlet**	**(m/sec)**	**17.48**	**17.67**	**5.44**	**9.06**	**5.45**	**15.71**		
39			Limit	60.96	60.96	60.96	60.96	60.96	60.96		
40	Sonic Velocity	@ Outlet	(m/sec)	223.91	223.91	313.44	310.56	313.44	310.62		
41	Mach No.	@ Outlet	(-)	0.08	0.08	0.02	0.03	0.02	0.05		
42	Reynolds No.	@ Outlet	(-)	572537.90	550559.64	549321.62	414012.81	549595.80	237412.45		
43	d*V*V/2g	@ Outlet	(kg/cm^2)	40.09	37.48	43.22	23.42	43.26	17.32		
44	4*F*L/D	@ Outlet	(-)	5.92	5.19	55.22	23.56	55.22	17.86		
45	**dP/100m**	**@ Outlet**	**(kg/cm^2)**	**0.024**	**0.019**	**0.239**	**0.055**	**0.239**	**0.031**		
46			Limit	0.035	0.035	0.350	0.070	0.350	0.035		
47	**Straight Pipe dP**		(kg/cm^2)	**0.024**	**0.019**	**0.237**	**0.055**	**0.238**	**0.031**		
48	dP of Control Valve		(kg/cm^2)								
49	dP of Heat Exchanger		(kg/cm^2)								
50	dP of Column		(kg/cm^2)								
51	dP of Strainer		(kg/cm^2)								
52	dP of Orifice		(kg/cm^2)								
53	Other dP		(kg/cm^2)								
54	Static Head		(m)								
55			(kg/cm^2)								
56	**Equip dP**		(kg/cm^2)								
57	Pipe Entrance										
58	Pipe Exit										
59	90 Elbow										
60	Tee										
61	Globe Valve										
62	Gate Valve										
63	Check Valve										
64	Butterfly Valve										
65	Ball valve										
66	Contraction										
67	Enlargement										
68	Other's K										
69	**Sum (Ki)**										
70	**Fitting dP**		(kg/cm^2)								
71	**Total dP**		(kg/cm^2)	**0.024**	**0.019**	**0.237**	**0.055**	**0.238**	**0.031**		
72	**Remarks**										
73											
74							VENT FROM				
75							D202 + D204				
76											
77											

PT LOTTE CHEMICAL INDONESIA

LINE HYDRAULIC CALCULATION SHEET (LINE WP5)

LOTTE E&C

1	PROJECT :	LINE PROJECT	JOB NO. :	15005
2	CLIENT :	PT LOTTE CHEMICAL INDONESIA	DOCU. NO. :	LINE-900-BC-4-0001
3	LOCATION :	CILEGON, INDONESIA	P&ID NO. :	REFER TO ROW NO. 10
4	UNIT :	**WP5**	CASE :	DESIGN
5	SERVICE :	**3.5 VENT FROM TANK**	SHEET :	2 OF 7 (VENT FROM TANK)

REVISION

6	**Item**		**C4 LPG FROM TK-203**		**C4 LPG FROM D-204**					
7	Line No		LPG-2117	FL-2045	LPG-2147	LPG-2093	LPG-2150	FL-2060		
8		**From**	**TK-203**	**PV-2017**	**D-204**	**PV-2022A**	**D-204**	**PV-2022B**		
9		**To**	**PV-2017**	**FLARE**	**PV-2022A**	**LPG-2055**	**PV-2022B**	**FLARE**		
10		P&ID No.	902-0005	902-0005	902-0007	902-0007	902-0007	902-0007		
11		Piping Material Class	1L1P	1S0Y	1L1P	1C1P	1L1P	1L1P		
12		Pipe Schedule	40	10S	40	40	40	40		
13		Pipe Roughness (mm)	0.046	0.015	0.046	0.046	0.046	0.046		
14		**Fluid**	**C4 LPG VAP.**	**C4 LPG VAP.**	**C4 LPG VAP.**	**C4 LPG VAP.**	**C4 LPG VAP.**	**C4 LPG VAP.**		
15	Calc Mode (L, Vu, Vd)		Vu	Vd	Vu	Vd	Vu	Vd		
16	Temperature	: T (C)	-3.0	-3.0	44.0	40.4	44.0	36.0		
17	Pressure	: P (kg/cm^2G)	0.12	0.00	5.70	3.40	5.70	0.10		
18	Density	@ T,P (kg/m^3)								
19	Molecular	@ T,P (-)	57.45	57.45	43.15	43.15	43.15	43.15		
20	Compress. Fact.	@ T,P (-)	0.96	0.96	0.90	0.94	0.90	0.98		
21	Viscosity	@ T,P (cP)	0.02	0.02	0.01	0.01	0.01	0.01		
22	C_P / C_V	@ T,P	1.11	1.11	1.17	1.15	1.17	1.13		
23	M/B Flow Rate	(kg/h)	7,511	7,511	210	210	210	210		
24	Excess Ratio	(-)	1.10	1.10	1.10	1.10	1.10	1.10		
25	Flow Rate	(kg/h)	8,262	8,262	232	232	232	232		
26	**Line Length**	(m)	**100**	**100**	**100**	**100**	**100**	**100**		
27	**Pipe Nominal Size**	(inch)	**10**	**10**	**2**	**2**	**2**	**3**		
28		**Calculation Result**	**OK**	**OK**	**OK**	**OK**	**OK**	**OK**		
29	Inlet Press.	(Input) (kg/cm^2G)	0.12		5.70		5.70			
30	Inlet Press.	(Calcul'd) (kg/cm^2G)	**0.12**	**0.02**	**5.70**	**3.42**	**5.70**	**0.11**		
31	Velocity	@ Inlet (m/sec)	15.02	15.25	2.48	3.85	2.48	7.03		
32	Reynolds No.	@ Inlet (-)	574066.50	552029.56	173303.89	176138.32	173303.89	122480.23		
33	d*V*V/2g	@ Inlet (kg/cm^2)	34.56	32.44	3.76	5.83	3.76	4.83		
34	4*F*L/D	@ Inlet (-)	5.92	5.19	39.50	39.45	39.50	25.93		
35	dP/100m	@ Inlet (kg/cm^2)	0.02	0.02	0.01	0.02	0.01	0.01		
36	Outlet Press.	(Input) (kg/cm^2G)		0.00		3.40		0.10		
37	Outlet Press.	(Calcul'd) (kg/cm^2G)	**0.10**		**5.69**	**3.40**	**5.69**	**0.10**		
38	**Velocity**	**@ Outlet (m/sec)**	**15.30**	**15.51**	**2.49**	**3.87**	**2.49**	**7.11**		
39		Limit	60.96	60.96	60.96	60.96	60.96	60.96		
40	Sonic Velocity	@ Outlet (m/sec)	204.66	204.66	254.26	255.52	254.26	257.39		
41	Mach No.	@ Outlet (-)	0.07	0.08	0.01	0.02	0.01	0.03		
42	Reynolds No.	@ Outlet (-)	574066.50	552029.56	173303.89	176138.32	173303.89	122480.23		
43	d*V*V/2g	@ Outlet (kg/cm^2)	35.19	32.98	3.76	5.86	3.76	4.89		
44	4*F*L/D	@ Outlet (-)	5.92	5.19	39.50	39.45	39.50	25.93		
45	**dP/100m**	**@ Outlet (kg/cm^2)**	**0.021**	**0.017**	**0.015**	**0.023**	**0.015**	**0.013**		
46		Limit	0.035	0.035	0.070	0.035	0.070	0.035		
47	**Straight Pipe dP**	(kg/cm^2)	**0.021**	**0.017**	**0.015**	**0.023**	**0.015**	**0.013**		
48	dP of Control Valve	(kg/cm^2)								
49	dP of Heat Exchanger	(kg/cm^2)								
50	dP of Column	(kg/cm^2)								
51	dP of Strainer	(kg/cm^2)								
52	dP of Orifice	(kg/cm^2)								
53	Other dP	(kg/cm^2)								
54	Static Head	(m)								
55		(kg/cm^2)								
56	**Equip dP**	(kg/cm^2)								
57	Pipe Entrance									
58	Pipe Exit									
59	90 Elbow									
60	Tee									
61	Globe Valve									
62	Gate Valve									
63	Check Valve									
64	Butterfly Valve									
65	Ball valve									
66	Contraction									
67	Enlargement									
68	Other's K									
69	**Sum (Ki)**									
70	**Fitting dP**	(kg/cm^2)								
71	**Total dP**	(kg/cm^2)	**0.021**	**0.017**	**0.015**	**0.023**	**0.015**	**0.013**		
72	**Remarks**									
73										
74										
75										
76										
77										

PT LOTTE CHEMICAL INDONESIA

LINE HYDRAULIC CALCULATION SHEET (LINE WP5)

LOTTE E&C

1	PROJECT :	LINE PROJECT	JOB NO. :	15005
2	CLIENT :	PT LOTTE CHEMICAL INDONESIA	DOCU. NO. :	LINE-900-BC-4-0001
3	LOCATION :	CILEGON, INDONESIA	P&ID NO. :	REFER TO ROW NO. 10
4	UNIT :	**WP5**	CASE :	DESIGN
5	SERVICE :	**3.5 VENT FROM TANK**	SHEET :	3 OF 7 (VENT FROM TANK)

REVISION

	Item			LP EL FROM TK-205		ETHYLENE MAKE UP GAS				LP EL FROM D-207	
7	Line No			EL-2010	FL-2082	EL-3033	EL-0028	EL-2029	EL-2001	EL-2057	FL-2110
8		**From**		**TK-205**	**PV-2026A**	**TK-301A/B**	**WP5 BL (SPT)**	**WP5 BL (DWT)**	**PV-2026B**	**D-207**	**PV-2034**
9		**To**		**PV-2026A**	**FLARE**	**WP5 BL (SPT)**	**WP5 BL (DWT)**	**PV-2026B**	**TK-205**	**PV-2034**	**FLARE**
10		P&ID No.		902-0008	902-0008	903-0001	902-0008	902-0008	902-0008	902-0011	902-0011
11		Piping Material Class		1S0Y	1S0Y	3L1P	3L1P	3L1P	1S0Y	3L1P	1S0Y
12		Pipe Schedule		10S	10S	40	40	40	10S	80	10S
13		Pipe Roughness (mm)		0.015	0.015	0.046	0.046	0.046	0.015	0.046	0.015
14		**Fluid**		**LP EL VAP.**	**LP EL VAP.**	**HP EL VAP.**	**HP EL VAP.**	**HP EL VAP.**	**HP EL VAP.**	**LP EL VAP.**	**LP EL VAP.**
15	Calc Mode (L, Vu, Vd)			Vu	Vd	Vu	Vu	Vu	Vu	Vu	Vd
16	Temperature	: T	(C)	-103.6	-103.6	-103.6	-103.6	-103.6	-103.6	-32.0	-67.3
17	Pressure	: P	(kg/cm^2G)	0.12	0.00	18.60	18.47	18.14	18.00	22.90	0.10
18	Density	@ T,P	(kg/m^3)								
19	Molecular	@ T,P	(-)	28.05	28.05	28.05	28.05	28.05	28.05	28.05	28.05
20	Compress. Fact.	@ T,P	(-)	0.98	0.98	0.72	0.72	0.72	0.72	0.74	0.98
21	Viscosity	@ T,P	(cP)	0.02	0.02	0.01	0.01	0.01	0.01	0.01	0.01
22	C_P / C_V	@ T,P		1.31	1.31	1.79	1.79	1.79	1.79	1.72	1.30
23	M/B Flow Rate		(kg/h)	5,314	5,314	947	947	947	947	431	431
24	Excess Ratio		(-)	1.10	1.10	1.10	1.10	1.10	1.10	1.10	1.10
25	Flow Rate		(kg/h)	5,845	5,845	1,042	1,042	1,042	1,042	474	474
26	**Line Length**		(m)	**100**	**100**	**203**	**516**	**210**	**136**	**100**	**100**
27	**Pipe Nominal Size**		(inch)	**10**	**10**	**2**	**2**	**2**	**6**	**1.5**	**4**
28		**Calculation Result**		**OK**	**OK**	**OK**	**OK**	**OK**	**OK**	**OK**	**OK**
29	Inlet Press.	(Input)	(kg/cm^2G)	0.12		18.60	18.47	18.14	18.00	22.90	
30	Inlet Press.	(Calcul'd)	(kg/cm^2G)	**0.12**	**0.01**	**18.60**	**18.47**	**18.14**	**18.00**	**22.90**	**0.11**
31	Velocity	@ Inlet	(m/sec)	12.81	14.13	2.51	2.52	2.57	0.27	2.60	7.65
32	Reynolds No.	@ Inlet	(-)	390558.53	390558.53	701762.19	701762.19	701762.19	228169.41	483168.38	219150.87
33	d*V*V/2g	@ Inlet	(kg/cm^2)	19.27	21.27	17.08	17.20	17.50	0.20	15.28	5.58
34	4*F*L/D	@ Inlet	(-)	5.45	5.45	75.36	191.52	77.94	13.46	55.38	15.22
35	dP/100m	@ Inlet	(kg/cm^2)	0.01	0.01	0.06	0.06	0.06	0.00	0.08	0.01
36	Outlet Press.	(Input)	(kg/cm^2G)		0.00						0.10
37	Outlet Press.	(Calcul'd)	(kg/cm^2G)	**0.11**		**18.47**	**18.14**	**18.00**	**0.10**	**22.82**	**0.10**
38	**Velocity**	**@ Outlet**	**(m/sec)**	**12.92**	**14.29**	**2.52**	**2.57**	**2.59**	**4.59**	**2.61**	**7.71**
39			Limit	60.96	60.96	60.96	60.96	60.96	60.96	60.96	60.96
40	Sonic Velocity	@ Outlet	(m/sec)	253.25	253.25	253.95	253.95	253.95	253.95	300.93	279.06
41	Mach No.	@ Outlet	(-)	0.05	0.06	0.01	0.01	0.01	0.02	0.01	0.03
42	Reynolds No.	@ Outlet	(-)	390558.53	390558.53	701762.19	701762.19	701762.19	228169.41	483168.38	219150.87
43	d*V*V/2g	@ Outlet	(kg/cm^2)	19.45	21.51	17.20	17.50	17.62	3.31	15.34	5.63
44	4*F*L/D	@ Outlet	(-)	5.45	5.45	75.36	191.52	77.94	13.46	55.38	15.22
45	**dP/100m**	**@ Outlet**	**(kg/cm^2)**	**0.011**	**0.012**	**0.064**	**0.065**	**0.065**	**0.003**	**0.085**	**0.009**
46			Limit	0.035	0.035	0.350	0.350	0.350	0.035	0.350	0.035
47	**Straight Pipe dP**		(kg/cm^2)	**0.011**	**0.012**	**0.129**	**0.332**	**0.137**	**0.001**	**0.085**	**0.009**
48	dP of Control Valve		(kg/cm^2)						17.9		
49	dP of Heat Exchanger		(kg/cm^2)								
50	dP of Column		(kg/cm^2)								
51	dP of Strainer		(kg/cm^2)								
52	dP of Orifice		(kg/cm^2)								
53	Other dP		(kg/cm^2)								
54	Static Head		(m)								
55			(kg/cm^2)								
56	**Equip dP**		(kg/cm^2)						**17.9**		
57	Pipe Entrance										
58	Pipe Exit										
59	90 Elbow										
60	Tee										
61	Globe Valve										
62	Gate Valve										
63	Check Valve										
64	Butterfly Valve										
65	Ball valve										
66	Contraction										
67	Enlargement										
68	Other's K										
69	**Sum (Ki)**										
70	**Fitting dP**		(kg/cm^2)								
71	**Total dP**		(kg/cm^2)	**0.011**	**0.012**	**0.129**	**0.332**	**0.137**	**17.901**	**0.085**	**0.009**
72	**Remarks**										
73											
74											
75											
76											
77											

PT LOTTE CHEMICAL INDONESIA

LINE HYDRAULIC CALCULATION SHEET (LINE WP5)

LOTTE E&C

1	PROJECT :	LINE PROJECT	JOB NO. :	15005
2	CLIENT :	PT LOTTE CHEMICAL INDONESIA	DOCU. NO. :	LINE-900-BC-4-0001
3	LOCATION :	CILEGON, INDONESIA	P&ID NO. :	REFER TO ROW NO. 10
4	UNIT :	**WP5**	CASE :	DESIGN
5	SERVICE :	**3.5 VENT FROM TANK**	SHEET :	4 OF 7 (VENT FROM TANK)

REVISION

	Item			LP PL FROM TK-208		PROPYLENE MAKE UP GAS				LP PL FROM D-209	
7	Line No			PL-2019	FL-2121	PL-3035	PL-0027	PL-2022	PL-2021	PL-2058	FL-2150
8		**From**		**TK-208**	**PV-2040A**	**TK-302ABC**	**WP5 BL (SPT)**	**WP5 BL (DWT)**	**PV-2040B**	**D-209**	**PV-2045**
9		**To**		**PV-2040A**	**FLARE**	**WP5 BL (SPT)**	**WP5 BL (DWT)**	**PV-2040B**	**TK-208**	**PV-2045**	**FLARE**
10		P&ID No.		902-0012	902-0012	903-0003	902-0012	902-0012	902-0012	902-0015	902-0015
11		Piping Material Class		1L1P	1S0Y	3L1P	3L1P	3L1P	1L1P	3L1P	1L1P
12		Pipe Schedule		40	10S	40	40	40	40	80	40
13		Pipe Roughness (mm)		0.046	0.015	0.046	0.046	0.046	0.046	0.046	0.046
14		**Fluid**		**LP PL VAP.**	**LP PL VAP.**	**HP PL VAP.**	**HP PL VAP.**	**HP PL VAP.**	**HP PL VAP.**	**LP PL VAP.**	**LP PL VAP.**
15	Calc Mode (L, Vu, Vd)			Vu	Vd	Vu	Vu	Vu	Vu	Vu	Vd
16	Temperature	: T	(C)	-46.9	-46.9	46.4	-46.9	-46.9	-46.9	44.0	34.8
17	Pressure	: P	(kg/cm^2G)	0.12	0.00	10.20	10.09	9.87	9.79	20.70	0.10
18	Density	@ T,P	(kg/m^3)								
19	Molecular	@ T,P	(-)	42.08	42.08	42.08	42.08	42.08	42.08	17.23	17.23
20	Compress. Fact.	@ T,P	(-)	0.97	0.97	0.79	0.79	0.79	0.79	0.96	1.00
21	Viscosity	@ T,P	(cP)	0.02	0.02	0.01	0.01	0.01	0.01	0.01	0.01
22	C_P / C_V	@ T,P		1.20	1.20	1.33	1.33	1.33	1.33	1.33	1.28
23	M/B Flow Rate		(kg/h)	5,569	5,569	1644	1644	1644	1644	83	83
24	Excess Ratio		(-)	1.10	1.10	1.10	1.10	1.10	1.10	1.10	1.10
25	Flow Rate		(kg/h)	6,126	6,126	1,808	1,808	1,808	1,808	91	91
26	**Line Length**		(m)	**100**	**100**	**191**	**516**	**180**	**148**	**100**	**100**
27	**Pipe Nominal Size**		(inch)	**10**	**10**	**3**	**3**	**3**	**6**	**1**	**3**
28		**Calculation Result**		**OK**	**OK**	**OK**	**OK**	**OK**	**OK**	**OK**	**OK**
29	Inlet Press.	(Input)	(kg/cm^2G)	0.12		10.20	10.09	9.87	9.79	20.70	
30	Inlet Press.	(Calcul'd)	(kg/cm^2G)	**0.12**	**0.01**	**10.20**	**10.09**	**9.87**	**9.79**	**20.70**	**0.11**
31	Velocity	@ Inlet	(m/sec)	12.83	13.10	4.76	3.40	3.47	0.89	3.77	7.06
32	Reynolds No.	@ Inlet	(-)	425639.24	409300.04	820722.66	820722.66	820722.66	415182.84	109534.12	36077.39
33	d*V*V/2g	@ Inlet	(kg/cm^2)	21.88	20.66	25.54	18.26	18.63	1.23	10.51	1.92
34	4*F*L/D	@ Inlet	(-)	6.09	5.42	43.82	118.36	41.29	15.80	101.52	31.02
35	dP/100m	@ Inlet	(kg/cm^2)	0.01	0.01	0.06	0.04	0.04	0.00	0.11	0.01
36	Outlet Press.	(Input)	(kg/cm^2G)		0.00						0.10
37	Outlet Press.	(Calcul'd)	(kg/cm^2G)	**0.11**		**10.09**	**9.87**	**9.79**	**0.09**	**20.59**	**0.10**
38	**Velocity**	**@ Outlet**	**(m/sec)**	**12.98**	**13.24**	**4.80**	**3.47**	**3.49**	**8.64**	**3.79**	**7.10**
39			Limit	60.96	60.96	60.96	60.96	60.96	60.96	60.96	
40	Sonic Velocity	@ Outlet	(m/sec)	228.07	228.07	257.32	216.52	216.52	216.52	442.50	436.27
41	Mach No.	@ Outlet	(-)	0.06	0.06	0.02	0.02	0.02	0.04	0.01	0.02
42	Reynolds No.	@ Outlet	(-)	425639.24	409300.04	820722.66	820722.66	820722.66	415182.84	109534.12	36077.39
43	d*V*V/2g	@ Outlet	(kg/cm^2)	22.14	20.88	25.80	18.63	18.76	11.87	10.56	1.93
44	4*F*L/D	@ Outlet	(-)	6.09	5.42	43.82	118.36	41.29	15.80	101.52	31.02
45	**dP/100m**	**@ Outlet**	**(kg/cm^2)**	**0.013**	**0.011**	**0.059**	**0.043**	**0.043**	**0.013**	**0.107**	**0.006**
46			Limit	0.035	0.035	0.070	0.070	0.070	0.035	0.350	0.035
47	**Straight Pipe dP**		(kg/cm^2)	**0.013**	**0.011**	**0.113**	**0.218**	**0.077**	**0.005**	**0.107**	**0.006**
48	dP of Control Valve		(kg/cm^2)						9.7		
49	dP of Heat Exchanger		(kg/cm^2)								
50	dP of Column		(kg/cm^2)								
51	dP of Strainer		(kg/cm^2)								
52	dP of Orifice		(kg/cm^2)								
53	Other dP		(kg/cm^2)								
54	Static Head		(m)								
55			(kg/cm^2)								
56	**Equip dP**		(kg/cm^2)						**9.7**		
57	Pipe Entrance										
58	Pipe Exit										
59	90 Elbow										
60	Tee										
61	Globe Valve										
62	Gate Valve										
63	Check Valve										
64	Butterfly Valve										
65	Ball valve										
66	Contraction										
67	Enlargement										
68	Other's K										
69	**Sum (Ki)**										
70	**Fitting dP**		(kg/cm^2)								
71	**Total dP**		(kg/cm^2)	**0.013**	**0.011**	**0.113**	**0.218**	**0.077**	**9.705**	**0.107**	**0.006**
72	**Remarks**										
73											
74											
75											
76											
77											

PT LOTTE CHEMICAL INDONESIA

LINE HYDRAULIC CALCULATION SHEET (LINE WP5)

LOTTE E&C

1	PROJECT :	LINE PROJECT			JOB NO. :	15005				REVISION
2	CLIENT :	PT LOTTE CHEMICAL INDONESIA			DOCU. NO. :	LINE-900-BC-4-0001				
3	LOCATION :	CILEGON, INDONESIA			P&ID NO. :	REFER TO ROW NO. 10				
4	UNIT :	**WP5**			CASE :	DESIGN				
5	SERVICE :	**3.5 VENT FROM TANK**			SHEET :	5 OF 7 (VENT FROM TANK)				
6	**Item**		**HP EL FROM TK-301AB**		**ETHYLENE BOG TO NCC**			**HP PL FROM TK-302ABC**		
7	Line No		EL-3034	FL-3005	EL-3035	EL-3035	EL-0025	PL-3024	FL-3040	
8		**From**	**TK-301A/B**	**PV-3004A/B**	**TK-301A/B**	**PV-3005A/B**	**WP5 BL**	**TK-302A/B/C**	**PV-3010A/B/C**	
9		**To**	**PV-3004A/B**	**FLARE**	**PV-3005A/B**	**WP5 BL**	**NCC UNIT**	**PV-3010A/B/C**	**FLARE**	
10		P&ID No.	903-0001	903-0001	903-0001	903-0001	903-0001	903-0003	903-0003	
11		Piping Material Class	3L1P	1S0Y	3L1P	3L1P	3L1P	3L1P	1L1P	
12		Pipe Schedule	40	10S	40	40	40	40	40	
13		Pipe Roughness (mm)	0.046	0.015	0.046	0.046	0.046	0.046	0.046	
14		**Fluid**	**ETHYLENE**	**ETHYLENE**	**ETHYLENE**	**ETHYLENE**	**ETHYLENE**	**PROPYLENE**	**PROPYLENE**	
15	Calc Mode (L, Vu, Vd)		Vu	Vu	Vu	Vu	Vu	Vu	Vd	
16	Temperature	: T (C)	-28.0	-28.0	-28.0	-28.0	-28.0	46.4	46.4	
17	Pressure	: P (kg/cm^2G)	20.90	20.84	20.40	20.19	11.64	18.40	0.30	
18	Density	@ T,P (kg/m^3)								
19	Molecular	@ T,P (-)	28.05	28.05	28.05	28.05	28.05	42.08	42.08	
20	Compress. Fact.	@ T,P (-)	0.72	0.72	0.72	0.72	0.72	0.79	0.79	
21	Viscosity	@ T,P (cP)	0.01	0.01	0.01	0.01	0.01	0.01	0.01	
22	C_P / C_V	@ T,P	1.79	1.79	1.79	1.79	1.79	1.33	1.33	
23	M/B Flow Rate	(kg/h)	2,212	2,212	2,212	4,424	4,424	3,595	3,595	
24	Excess Ratio	(-)	1.10	1.10	1.10	1.10	1.10	1.10	1.10	
25	Flow Rate	(kg/h)	2,433	2,433	2,433	4,867	4,867	3,955	3,955	
26	**Line Length**	(m)	**100**	**100**	**20**	**347**	**120**	**100**	**100**	
27	**Pipe Nominal Size**	(inch)	**3**	**6**	**3**	**4**	**4**	**3**	**8**	
28		**Calculation Result**	**OK**	**OK**	**OK**	**OK**	**OK**	**OK**	**OK**	
29	Inlet Press.	(Input) (kg/cm^2G)	20.90	20.84	20.40	20.19	11.64	18.40		
30	Inlet Press.	(Calcul'd) (kg/cm^2G)	**20.90**	**20.84**	**20.40**	**20.19**	**11.64**	**18.40**	**0.32**	
31	Velocity	@ Inlet (m/sec)	3.44	0.80	3.52	4.13	6.91	6.01	12.79	
32	Reynolds No.	@ Inlet (-)	1104341.85	532986.69	1104341.85	1683187.18	1683187.18	1794933.71	690011.76	
33	d*V*V/2g	@ Inlet (kg/cm^2)	24.85	1.35	25.43	34.65	58.03	70.61	22.19	
34	4*F*L/D	@ Inlet (-)	22.77	8.82	4.55	56.46	19.52	22.57	7.55	
35	dP/100m	@ Inlet (kg/cm^2)	0.06	0.00	0.06	0.06	0.09	0.16	0.02	
36	Outlet Press.	(Input) (kg/cm^2G)		20.84					0.30	
37	Outlet Press.	(Calcul'd) (kg/cm^2G)	**20.84**	**0.34**	**20.19**	**11.64**	**11.52**	**18.24**	**0.30**	
38	**Velocity**	**@ Outlet (m/sec)**	**3.45**	**12.80**	**3.55**	**6.91**	**6.98**	**6.06**	**12.95**	
39		Limit	60.96	60.96	60.96	60.96	60.96	60.96	60.96	
40	Sonic Velocity	@ Outlet (m/sec)	305.36	305.36	305.36	305.36	305.36	257.32	257.32	
41	Mach No.	@ Outlet (-)	0.01	0.04	0.01	0.02	0.02	0.02	0.05	
42	Reynolds No.	@ Outlet (-)	1104341.85	532986.69	1104341.85	1683187.18	1683187.18	1794933.71	690011.76	
43	d*V*V/2g	@ Outlet (kg/cm^2)	24.92	21.54	25.69	58.03	58.56	71.19	22.48	
44	4*F*L/D	@ Outlet (-)	22.77	8.82	4.55	56.46	19.52	22.57	7.55	
45	**dP/100m**	**@ Outlet (kg/cm^2)**	**0.057**	**0.019**	**0.058**	**0.094**	**0.095**	**0.161**	**0.017**	
46		Limit	0.350	0.035	0.350	0.140	0.140	0.350	0.035	
47	**Straight Pipe dP**	(kg/cm^2)	**0.057**	**0.004**	**0.012**	**0.249**	**0.114**	**0.160**	**0.017**	
48	dP of Control Valve	(kg/cm^2)		20.5		8.3				
49	dP of Heat Exchanger	(kg/cm^2)								
50	dP of Column	(kg/cm^2)								
51	dP of Strainer	(kg/cm^2)								
52	dP of Orifice	(kg/cm^2)			0.2					
53	Other dP	(kg/cm^2)								
54	Static Head	(m)								
55		(kg/cm^2)								
56	**Equip dP**	(kg/cm^2)		**20.500**	**0.200**	**8.3**				
57	Pipe Entrance									
58	Pipe Exit									
59	90 Elbow									
60	Tee									
61	Globe Valve									
62	Gate Valve									
63	Check Valve									
64	Butterfly Valve									
65	Ball valve									
66	Contraction									
67	Enlargement									
68	Other's K									
69	**Sum (Ki)**									
70	**Fitting dP**	(kg/cm^2)								
71	**Total dP**	(kg/cm^2)	**0.057**	**20.504**	**0.212**	**8.549**	**0.114**	**0.160**	**0.017**	
72	**Remarks**									
73										
74										
75										
76										
77										

PT LOTTE CHEMICAL INDONESIA

LINE HYDRAULIC CALCULATION SHEET (LINE WP5)

LOTTE E&C

1	PROJECT :	LINE PROJECT				JOB NO. :	15005				REVISION
2	CLIENT :	PT LOTTE CHEMICAL INDONESIA				DOCU. NO. :	LINE-900-BC-4-0001				
3	LOCATION :	CILEGON, INDONESIA				P&ID NO. :	REFER TO ROW NO. 10				
4	UNIT :	**WP5**				CASE :	DESIGN				
5	SERVICE :	**3.5 VENT FROM TANK**				SHEET :	6 OF 7 (VENT FROM TANK)				
6	**Item**		**M-C4 FROM TK-303ABC**		**BD FROM TK-304AB**		**C4 RAFF. FROM TK-305AB**				
7	Line No		BMX-3051	FL-3082	BD-3035	FL-3124	BMX-3119	FL-3163			
8		**From**	**TK-303A/B/C**	**PV-3015A/B/C**	**TK-304A/B**	**PV-3020A/B**	**TK-305A/B**	**PV-3038A/B**			
9		**To**	**PV-3015A/B/C**	**FLARE**	**PV-3020A/B**	**FLARE**	**PV-3038A/B**	**FLARE**			
10		P&ID No.	903-0005	903-0005	903-0007	903-0007	903-0009	903-0009			
11		Piping Material Class	1C1P	1L1P	1C1P	1L1P	1C1P	1L1P			
12		Pipe Schedule	40	40	40	40	40	40			
13		Pipe Roughness (mm)	0.046	0.046	0.046	0.046	0.046	0.046			
14		**Fluid**	**MIXED C4**	**MIXED C4**	**BUTADIENE**	**BUTADIENE**	**C4 RAFFI.**	**C4 RAFFI.**			
15	Calc Mode (L, Vu, Vd)		Vu	Vd	Vu	Vd	Vu	Vd			
16	Temperature	: T (C)	39.9	39.9	5.0	5.0	41.1	41.1			
17	Pressure	: P (kg/cm^2G)	3.60	0.30	0.44	0.30	3.80	0.30			
18	Density	@ T,P (kg/m^3)									
19	Molecular	@ T,P (-)	56.00	56.00	54.00	54.00	58.00	58.00			
20	Compress. Fact.	@ T,P (-)	0.89	0.89	0.96	0.96	0.88	0.88			
21	Viscosity	@ T,P (cP)	0.01	0.01	0.01	0.01	0.01	0.01			
22	C_P / C_V	@ T,P	1.15	1.15	1.14	1.14	1.14	1.14			
23	M/B Flow Rate	(kg/h)	1,565	1,565	785	785	1,263	1,263			
24	Excess Ratio	(-)	1.10	1.10	1.10	1.10	1.10	1.10			
25	Flow Rate	(kg/h)	1,721	1,721	863	863	1,389	1,389			
26	**Line Length**	(m)	**100**	**100**	**100**	**100**	**100**	**100**			
27	**Pipe Nominal Size**	(inch)	**4**	**6**	**4**	**4**	**3**	**6**			
28		**Calculation Result**	**OK**	**OK**	**OK**	**OK**	**OK**	**OK**			
29	Inlet Press.	(Input) (kg/cm^2G)	3.60		0.44		3.80				
30	Inlet Press.	(Calcul'd) (kg/cm^2G)	**3.60**	**0.31**	**0.44**	**0.32**	**3.80**	**0.31**			
31	Velocity	@ Inlet (m/sec)	5.31	8.07	8.28	8.99	6.77	6.25			
32	Reynolds No.	@ Inlet (-)	595225.71	395117.05	298477.51	298477.51	630382.53	318894.59			
33	d*V*V/2g	@ Inlet (kg/cm^2)	15.77	10.55	12.32	13.37	27.93	6.59			
34	4*F*L/D	@ Inlet (-)	16.81	10.75	17.53	17.53	23.13	10.95			
35	dP/100m	@ Inlet (kg/cm^2)	0.03	0.01	0.02	0.02	0.06	0.01			
36	Outlet Press.	(Input) (kg/cm^2G)		0.30		0.30		0.30			
37	Outlet Press.	(Calcul'd) (kg/cm^2G)	**3.57**	**0.30**	**0.42**	**0.30**	**3.73**	**0.30**			
38	**Velocity**	**@ Outlet (m/sec)**	**5.34**	**8.14**	**8.40**	**9.15**	**6.86**	**6.28**			
39		Limit	60.96	60.96	60.96	60.96	60.96	60.96			
40	Sonic Velocity	@ Outlet (m/sec)	218.41	218.41	216.03	216.03	212.49	212.49			
41	Mach No.	@ Outlet (-)	0.02	0.04	0.04	0.04	0.03	0.03			
42	Reynolds No.	@ Outlet (-)	595225.71	395117.05	298477.51	298477.51	630382.53	318894.59			
43	d*V*V/2g	@ Outlet (kg/cm^2)	15.86	10.64	12.50	13.61	28.31	6.63			
44	4*F*L/D	@ Outlet (-)	16.81	10.75	17.53	17.53	23.13	10.95			
45	**dP/100m**	**@ Outlet (kg/cm^2)**	**0.027**	**0.011**	**0.022**	**0.024**	**0.065**	**0.007**			
46		Limit	0.070	0.035	0.035	0.035	0.070	0.035			
47	**Straight Pipe dP**	(kg/cm^2)	**0.027**	**0.011**	**0.022**	**0.024**	**0.065**	**0.007**			
48	dP of Control Valve	(kg/cm^2)									
49	dP of Heat Exchanger	(kg/cm^2)									
50	dP of Column	(kg/cm^2)									
51	dP of Strainer	(kg/cm^2)									
52	dP of Orifice	(kg/cm^2)									
53	Other dP	(kg/cm^2)									
54	Static Head	(m)									
55		(kg/cm^2)									
56	**Equip dP**	(kg/cm^2)									
57	Pipe Entrance										
58	Pipe Exit										
59	90 Elbow										
60	Tee										
61	Globe Valve										
62	Gate Valve										
63	Check Valve										
64	Butterfly Valve										
65	Ball valve										
66	Contraction										
67	Enlargement										
68	Other's K										
69	**Sum (Ki)**										
70	**Fitting dP**	(kg/cm^2)									
71	**Total dP**	(kg/cm^2)	**0.027**	**0.011**	**0.022**	**0.024**	**0.065**	**0.007**			
72	**Remarks**										
73											
74											
75											
76											
77											

PT LOTTE CHEMICAL INDONESIA

LINE HYDRAULIC CALCULATION SHEET (LINE WP5)

LOTTE E&C

1	PROJECT :	LINE PROJECT	JOB NO. :	15005
2	CLIENT :	PT LOTTE CHEMICAL INDONESIA	DOCU. NO. :	LINE-900-BC-4-0001
3	LOCATION :	CILEGON, INDONESIA	P&ID NO. :	REFER TO ROW NO. 10
4	UNIT :	**WP5**	CASE :	DESIGN
5	SERVICE :	**3.5 VENT FROM TANK**	SHEET :	7 OF 7 (VENT FROM TANK)

REVISION

	Item			C4 FROM TK-306		C5 FROM TK-402					
7	Line No			BMX-3125	FL-3169	HC-4019	FL-4003				
8		**From**		**TK-306**	**PV-3039**	**TK-402**	**PV-4006B**				
9		**To**		**PV-3039**	**FLARE**	**PV-4006B**	**FLARE**				
10		P&ID No.		903-0009	903-0009	904-0002	904-0002				
11		Piping Material Class		1C1P	1L1P	1C1P	1L1P				
12		Pipe Schedule		40	40	40	40				
13		Pipe Roughness (mm)		0.046	0.046	0.046	0.046				
14		**Fluid**		**C4 COMMON**	**C4 COMMON**	**C5**	**C5**				
15	Calc Mode (L, Vu, Vd)			Vu	Vd	Vu	Vd				
16	Temperature	: T	(C)	41.1	41.1	50.0	50.0				
17	Pressure	: P	(kg/cm^2G)	3.80	0.30	1.40	0.30				
18	Density	@ T,P	(kg/m^3)								
19	Molecular	@ T,P	(-)	58.00	58.00	72.15	72.15				
20	Compress. Fact.	@ T,P	(-)	0.88	0.88	0.93	0.93				
21	Viscosity	@ T,P	(cP)	0.01	0.01	0.01	0.01				
22	C_P / C_V	@ T,P		1.14	1.14	1.09	1.09				
23	M/B Flow Rate		(kg/h)	1,263	1,263	1,141	1,141				
24	Excess Ratio		(-)	1.10	1.10	1.10	1.10				
25	Flow Rate		(kg/h)	1,389	1,389	1,255	1,255				
26	**Line Length**		(m)	**100**	**100**	**100**	**100**				
27	**Pipe Nominal Size**		(inch)	**3**	**6**	**4**	**6**				
28		**Calculation Result**		**OK**	**OK**	**OK**	**OK**				
29	Inlet Press.	(Input)	(kg/cm^2G)	3.80		1.40					
30	Inlet Press.	(Calcul'd)	(kg/cm^2G)	**3.80**	**0.31**	**1.40**	**0.31**				
31	Velocity	@ Inlet	(m/sec)	6.77	6.25	6.13	4.91				
32	Reynolds No.	@ Inlet	(-)	630382.53	318894.59	578739.70	384173.46				
33	d*V*V/2g	@ Inlet	(kg/cm^2)	27.93	6.59	13.26	4.68				
34	4*F*L/D	@ Inlet	(-)	23.13	10.95	16.83	10.77				
35	dP/100m	@ Inlet	(kg/cm^2)	0.06	0.01	0.02	0.01				
36	Outlet Press.	(Input)	(kg/cm^2G)		0.30		0.30				
37	Outlet Press.	(Calcul'd)	(kg/cm^2G)	**3.73**	**0.30**	**1.38**	**0.30**				
38	**Velocity**	**@ Outlet**	**(m/sec)**	**6.86**	**6.28**	**6.18**	**4.93**				
39			Limit	60.96	60.96	60.96	60.96				
40	Sonic Velocity	@ Outlet	(m/sec)	212.49	212.49	193.41	193.41				
41	Mach No.	@ Outlet	(-)	0.03	0.03	0.03	0.03				
42	Reynolds No.	@ Outlet	(-)	630382.53	318894.59	578739.70	384173.46				
43	d*V*V/2g	@ Outlet	(kg/cm^2)	28.31	6.63	13.38	4.70				
44	4*F*L/D	@ Outlet	(-)	23.13	10.95	16.83	10.77				
45	**dP/100m**	**@ Outlet**	**(kg/cm^2)**	**0.065**	**0.007**	**0.023**	**0.005**				
46			Limit	0.070	0.035	0.035	0.035				
47	**Straight Pipe dP**		(kg/cm^2)	**0.065**	**0.007**	**0.022**	**0.005**				
48	dP of Control Valve		(kg/cm^2)								
49	dP of Heat Exchanger		(kg/cm^2)								
50	dP of Column		(kg/cm^2)								
51	dP of Strainer		(kg/cm^2)								
52	dP of Orifice		(kg/cm^2)								
53	Other dP		(kg/cm^2)								
54	Static Head		(m)								
55			(kg/cm^2)								
56	**Equip dP**		(kg/cm^2)								
57	Pipe Entrance										
58	Pipe Exit										
59	90 Elbow										
60	Tee										
61	Globe Valve										
62	Gate Valve										
63	Check Valve										
64	Butterfly Valve										
65	Ball valve										
66	Contraction										
67	Enlargement										
68	Other's K										
69	**Sum (Ki)**										
70	**Fitting dP**		(kg/cm^2)								
71	**Total dP**		(kg/cm^2)	**0.065**	**0.007**	**0.022**	**0.005**				
72	**Remarks**										
73											
74											
75											
76											
77											

PT LOTTE CHEMICAL INDONESIA

LINE HYDRAULIC CALCULATION SHEET (LINE WP5)

LOTTE E&C

1	PROJECT :	LINE PROJECT	JOB NO. :	15005
2	CLIENT :	PT LOTTE CHEMICAL INDONESIA	DOCU. NO. :	LINE-900-BC-4-0001
3	LOCATION :	CILEGON, INDONESIA	P&ID NO. :	REFER TO ROW NO. 10
4	UNIT :	**WP5**	CASE :	DESIGN
5	SERVICE :	**3.6 OTHER LINES**	SHEET :	1 OF 2 (OTHER LINES)

REVISION

	Item			RTO INLET	3.6.2 HP EL VAPOR TO PP UNIT			3.6.3 DRAIN DRUM		3.6.4 OWS DRUM	
7	Line No			VOC-2001	EL-3060	EL-3061	EL-3061	DRAINS	VENT	DRAINS	VENT
8		**From**		**VOC**	**E-301**	**E-341**	**WP5 BL**	**HEADER**	**DRAIN DRUM**	**HEADER**	**OWS DRUM**
9		**To**		**W-201**	**E-341**	**WP5 BL**	**PP UNIT**	**DRAIN DRUM**	**RTO**	**OWS DRUM**	**RTO**
10		P&ID No.		902-0017	903-0002	903-0002	903-0002	904-0101-B	904-0101-B	904-0102-B	904-0102-B
11		Piping Material Class		1R0P	3L1P	3L1P	3L1P	1C1U	1C1P	1C1U	1C1P
12		Pipe Schedule		STD	STD	STD	STD	40	40	40	40
13		Pipe Roughness (mm)		0.015	0.046	0.046	0.046	0.046	0.046	0.046	0.046
14		**Fluid**		**VOC**	**EL VAP.**	**EL VAP.**	**EL VAP.**	**DRAINS**	**VOC**	**OWS**	**VOC**
15	Calc Mode (L, Vu, Vd)			Vd	Vu	Vu	Vu	L	Vd	L	Vd
16	Temperature	: T	(C)	22.7	0.0	40.0	40.0	22.7	30.0	25.0	30.0
17	Pressure	: P	(kg/cm^2G)	0.00	39.60	38.98	38.53	0.09	0.00	1.00	0.00
18	Density	@ T,P	(kg/m^3)					693.0		997.0	
19	Molecular	@ T,P	(-)	29.00	28.05	28.05	28.05		28.00		28.00
20	Compress. Fact.	@ T,P	(-)	1.00	1.00	1.00	1.00		1.00		1.00
21	Viscosity	@ T,P	(cP)	0.01	0.01	0.01	0.01	0.830	0.02	0.890	0.02
22	C_P / C_V	@ T,P		1.40	1.14	1.14	1.14		1.40		1.40
23	M/B Flow Rate		(kg/h)	77,679	60,000	60,000	6,000	23,000	37	23,000	26
24	Excess Ratio		(-)	1.00	1.10	1.10	1.10	1.00	1.00	1.00	1.00
25	Flow Rate		(kg/h)	77,679	66,000	66,000	6,600	23,000	37	23,000	26
26	**Line Length**		(m)	**3000**	**53**	**168**	**1200**	**100**	**100**	**100**	**100**
27	**Pipe Nominal Size**		(inch)	**44**	**12**	**12**	**12**	**4**	**2**	**4**	**2**
28		**Calculation Result**		**OK**	**OK**	**OK**	**OK**	**OK**	**OK**	**OK**	**OK**
29	Inlet Press.	(Input)	(kg/cm^2G)		39.60	38.98	38.53	0.09		1.00	
30	Inlet Press.	(Calcul'd)	(kg/cm^2G)	**0.06**	**39.60**	**38.98**	**38.53**	**0.09**	**0.01**	**1.00**	**0.00**
31	Velocity	@ Inlet	(m/sec)	17.94	5.10	5.94	0.60	1.12	4.23	0.78	2.95
32	Reynolds No.	@ Inlet	(-)	2499964.55	6962142.21	6381963.69	638196.37	95840.83	12591.20	89379.65	8751.96
33	d*V*V/2g	@ Inlet	(kg/cm^2)	20.81	65.36	76.08	0.77	44.52	1.04	30.95	0.50
34	4*F*L/D	@ Inlet	(-)	28.78	2.28	7.26	57.57	19.80	58.22	19.99	63.37
35	dP/100m	@ Inlet	(kg/cm^2)	0.00	0.03	0.03	0.00	0.09	0.01	0.06	0.00
36	Outlet Press.	(Input)	(kg/cm^2G)	0.00					0.00		0.00
37	Outlet Press.	(Calcul'd)	(kg/cm^2G)	**0.00**	**38.98**	**38.53**	**38.52**	**0.00**		**0.94**	
38	**Velocity**	**@ Outlet**	**(m/sec)**	**19.01**	**5.18**	**6.01**	**0.60**	**1.12**	**4.26**	**0.78**	**2.96**
39			Limit	60.96	60.96	60.96	60.96	2.40	60.96	2.40	60.96
40	Sonic Velocity	@ Outlet	(m/sec)	344.49	303.72	325.19	325.19		354.89		354.89
41	Mach No.	@ Outlet	(-)	0.06	0.02	0.02	0.00		0.01		0.01
42	Reynolds No.	@ Outlet	(-)	2499964.55	6962142.21	6381963.69	638196.37	95840.83	12591.20	89379.65	8751.96
43	d*V*V/2g	@ Outlet	(kg/cm^2)	22.05	66.37	76.96	0.77	44.52	1.04	30.95	0.50
44	4*F*L/D	@ Outlet	(-)	28.78	2.28	7.26	57.57	19.80	58.22	19.99	63.37
45	**dP/100m**	**@ Outlet**	**(kg/cm^2)**	**0.002**	**0.029**	**0.033**	**0.000**	**0.088**	**0.006**	**0.062**	**0.003**
46			Limit	0.023	0.350	0.350	0.350	0.090	0.035	0.090	0.035
47	**Straight Pipe dP**		(kg/cm^2)	**0.000**	**0.015**	**0.056**	**0.004**	**0.088**	**0.006**	**0.062**	**0.003**
48	dP of Control Valve		(kg/cm^2)								
49	dP of Heat Exchanger		(kg/cm^2)		0.6	0.4					
50	dP of Column		(kg/cm^2)								
51	dP of Strainer		(kg/cm^2)								
52	dP of Orifice		(kg/cm^2)								
53	Other dP		(kg/cm^2)								
54	Static Head		(m)								
55			(kg/cm^2)								
56	**Equip dP**		(kg/cm^2)		**0.600**	**0.400**					
57	Pipe Entrance										
58	Pipe Exit										
59	90 Elbow										
60	Tee										
61	Globe Valve										
62	Gate Valve										
63	Check Valve										
64	Butterfly Valve										
65	Ball valve										
66	Contraction										
67	Enlargement										
68	Other's K										
69	**Sum (Ki)**										
70	**Fitting dP**		(kg/cm^2)								
71	**Total dP**		(kg/cm^2)	**0.000**	**0.615**	**0.456**	**0.004**	**0.088**	**0.006**	**0.062**	**0.003**
72	**Remarks**										
73											
74				**RTO DESIGN CAPACITY 60000 NM3/H**	**P-301AB CAPA X. 2 OPER.**	**P-301AB CAPA X. 2 OPER.**	**DESIGN FLOWRATE TO PP**	**FLOWRATE ASSUMED AS GRAVITY FLOW**	**LIQ. VOL. FLOW CONVERTED TO VAPOR MASS FLOW**	**FLOWRATE ASSUMED AS GRAVITY FLOW**	**LIQ. VOL. FLOW CONVERTED TO VAPOR MASS FLOW**
75											
76											
77											

PT LOTTE CHEMICAL INDONESIA

LINE HYDRAULIC CALCULATION SHEET (LINE WP5)

LOTTE E&C

1	PROJECT :	LINE PROJECT	JOB NO. :	15005
2	CLIENT :	PT LOTTE CHEMICAL INDONESIA	DOCU. NO. :	LINE-900-BC-4-0001
3	LOCATION :	CILEGON, INDONESIA	P&ID NO. :	REFER TO ROW NO. 10
4	UNIT :	**WP5**	CASE :	DESIGN
5	SERVICE :	**3.6 OTHER LINES**	SHEET :	2 OF 2 (OTHER LINES)

REVISION

6	**Item**		**DRAIN PIT**	**OWS PIT**
7	Line No		STORM WATERS	STORM WATERS
8		**From**	**DRAIN PIT**	**OWS PIT**
9		**To**	**EJECTOR**	**EJECTOR**
10		P&ID No.	904-0101-B	904-0102-B
11		Piping Material Class	1C1P	1C1P
12		Pipe Schedule	80	80
13		Pipe Roughness (mm)	0.046	0.046
14		**Fluid**	**STORM WATER**	**STORM WATER**
15	Calc Mode (L, Vu, Vd)		L	L
16	Temperature	: T (C)	25.0	25.0
17	Pressure	: P (kg/cm^2G)	-0.50	-0.50
18	Density	@ T,P (kg/m^3)	1000.0	1000.0
19	Molecular	@ T,P (-)		
20	Compress. Fact.	@ T,P (-)		
21	Viscosity	@ T,P (cP)	1.500	1.500
22	C_P / C_V	@ T,P		
23	M/B Flow Rate	(kg/h)	1,600	3,100
24	Excess Ratio	(-)	1.10	1.10
25	Flow Rate	(kg/h)	1,760	3,410
26	**Line Length**	(m)	**100**	**100**
27	**Pipe Nominal Size**	(inch)	**1 1/2**	**2**
28		**Calculation Result**	**OK**	**OK**
29	Inlet Press.	(Input) (kg/cm^2G)	-0.50	-0.50
30	Inlet Press.	(Calcul'd) (kg/cm^2G)	**-0.50**	**-0.50**
31	Velocity	@ Inlet (m/sec)	0.43	0.50
32	Reynolds No.	@ Inlet (-)	10891.88	16325.39
33	d*V*V/2g	@ Inlet (kg/cm^2)	9.38	12.61
34	4*F*L/D	@ Inlet (-)	84.22	58.88
35	dP/100m	@ Inlet (kg/cm^2)	0.08	0.07
36	Outlet Press.	(Input) (kg/cm^2G)		
37	Outlet Press.	(Calcul'd) (kg/cm^2G)	**-0.58**	**-0.57**
38	**Velocity**	**@ Outlet (m/sec)**	**0.43**	**0.50**
39		Limit	0.90	0.90
40	Sonic Velocity	@ Outlet (m/sec)		
41	Mach No.	@ Outlet (-)		
42	Reynolds No.	@ Outlet (-)	10891.88	16325.39
43	d*V*V/2g	@ Outlet (kg/cm^2)	9.38	12.61
44	4*F*L/D	@ Outlet (-)	84.22	58.88
45	**dP/100m**	**@ Outlet (kg/cm^2)**	**0.079**	**0.074**
46		Limit	0.460	0.460
47	**Straight Pipe dP**	(kg/cm^2)	**0.000**	**0.074**
48	dP of Control Valve	(kg/cm^2)		
49	dP of Heat Exchanger	(kg/cm^2)		
50	dP of Column	(kg/cm^2)		
51	dP of Strainer	(kg/cm^2)		
52	dP of Orifice	(kg/cm^2)		
53	Other dP	(kg/cm^2)		
54	Static Head	(m)		
55		(kg/cm^2)		
56	**Equip dP**	(kg/cm^2)		
57	Pipe Entrance			
58	Pipe Exit			
59	90 Elbow			
60	Tee			
61	Globe Valve			
62	Gate Valve			
63	Check Valve			
64	Butterfly Valve			
65	Ball valve			
66	Contraction			
67	Enlargement			
68	Other's K			
69	**Sum (Ki)**			
70	**Fitting dP**	(kg/cm^2)		
71	**Total dP**	(kg/cm^2)	**0.000**	**0.074**
72	**Remarks**			
73				
74				
75				
76				
77				

PT LOTTE CHEMICAL INDONESIA

LINE HYDRAULIC CALCULATION SHEET (WP5) - 2 PHASE

LOTTE E&C

1	PROJECT :	LINE PROJECT	JOB NO. :	15005
2	CLIENT :	PT LOTTE CHEMICAL INDONESIA	DOCU. NO. :	LINE-900-BC-4-0001
3	LOCATION :	CILEGON, INDONESIA	P&ID NO. :	REFER TO ROW NO. 12
4	UNIT :	**WP5**	CASE :	DESIGN
5	SERVICE :	**3.7 TWO PHASE LINES**	SHEET :	1 OF 1 (2 PHASE LINES)

REVISION

6	**INPUT DATA FOR PIPING PRESSURE DROP**										
7	**Item**		**C3 LPG**	**C4 LPG**	**LP EL**	**LP PL**	**REFRIGERANT**	**REFRIGERANT**	**DRAIN PIT**	**OWS PIT**	
8	Line No.		LPG-2090	LPG-2154	EL-2056	PL-2054	PL-2074	PL-3090	STORM WATERS	STORM WATERS	
9	**From**		**LV-2007**	**D-204**	**LV-2018**	**LV-2053**	**LV-2014**	**LV-3004**	**EJECTOR**	**EJECTOR**	
10	**To**		**TK-201**	**TK-203**	**TK-205**	**TK-208**	**E-207**	**E-304**	**OPEN DITCH**	**OPEN DITCH**	
11	PFD Stream No.		-	-	-	-	-	-	-	-	
12	P&ID No.		902-0004	902-0007	902-0011	902-0015	902-0011	903-0007	904-0101-B	904-0102-B	
13	Piping Material Class		1L1P	1L1P	1S0Y	1L1P	3L1P	3L1P	1C1P	1C1P	
14	**INLET DATA INPUT**										
15	Press.	(kg/cm2 g)	0.00	0.00	0.00	0.00	0.43	3.40	0.00	0.00	
16	Temp.	(℃)	-43.6	-3.0	-103.6	-46.9	-40.0	-9.7	25.0	25.0	
17	**LIQUID DATA INPUT**										
18	Flow Rate	(kg/hr)	5,000	5,000	3,000	1,600	6,586	6,230	1600	3100	
19	Density	(kg/m3)	451.9	540.2	444.4	473.0	599.0	559.5	1000.0	1000.0	
20	Surface Tension	(dyne/cm)	7.00	7.00	16.60	16.50	16.50	16.50	71.97	71.97	
21	Viscosity	(cp)	0.07	0.14	0.07	0.05	0.15	0.10	1.50	1.50	
22	**VAPOR DATA INPUT**										
23	Flow Rate	(kg/hr)	5,000	5,000	3,000	1,600	1,540	50	180	360	
24	Density	(kg/m3)	2.50	3.00	2.30	2.60	3.20	9.10	2.04	2.04	
25	Viscosity	(cp)	0.01	0.01	0.01	0.01	0.01	0.01	0.02	0.02	
26	**LINE DATA INPUT**										
27	Nominal Pipe Size	(A)	**150 A**	**150 A**	**100 A**	**100 A**	**100 A**	**100 A**	**40 A**	**50 A**	
28		(in)	**6**	**6**	**4**	**4**	**4**	**4**	**1.5**	**2**	
29	Pipe Sch.		40	40	10S	40	40	40	80	80	
30											
31	Inside Dia.	(in)	6.1	6.1	4.3	4.0	4.0	4.0	1.5	1.9	
32	Roughtness	(mm)	0.046	0.046	0.015	0.046	0.046	0.046	0.046	0.046	
33	Straight Length	(m)	100	100	100	100	100	100	100	100	
34	**NUMBER OF FITTING**										
35	Elbows										
36	Straight tee										
37	Branch tee										
38	Gate valves										
39	Check valves										
40	Reducer										
41	Entrance										
42	Exit										
43	Others	(m)									
44	Total Eq. Length	(m)	100	100	100	100	100	100	100	100	
45	Static Head Loss	(m)									
46	**CALCULATION RESULT**										
47	ρv	(kg/m2.s)	149.1	149.1	181.4	108.3	275.0	212.5	433.9	504.8	
48	ρv2	(kg/m.s)	4471.5	3726.4	7187.1	2267.4	4580.0	119.6	9502.6	13224.0	
49	**Erosion Vel.**	**(m/s)**	**54.7**	**49.9**	**57.0**	**53.6**	**30.0**	**6.3**	**27.4**	**27.8**	
50	**Homo. Vel.**	**(m/s)**	**30.0**	**25.0**	**39.6**	**20.9**	**16.7**	**0.6**	**21.9**	**26.2**	
51	**if Homo V < Erosion V, then OK**		**OK**	**OK**	**OK**	**OK**	**OK**	**OK**	**OK**	**OK**	
52	Homo. Density	(kg/m3)	5.0	6.0	4.6	5.2	16.5	377.6	19.8	19.3	
53	Ver. Flow Regime	(G.W.Map)	Annular	Annular	Annular	Annular	Annular	slug	Annular	Annular	
54	Nfr		595.3	413.4	1480.1	437.2	276.6	0.3	1283.6	1421.0	
55	Fv		1.0	1.0	1.0	1.0	1.0	0.3	1.0	1.0	
56	Hor. Flow Regime	(Baker's Map)	Dispersed	Dispersed	Dispersed	Annular	Dispersed	Slug	Annular	Annular	
57	Bx		7.1	9.4	2.8	2.8	17.8	785.7	13.4	13.0	
58	By		56631.2	47283.5	72413.0	39417.8	30386.4	605.4	24803.2	29687.6	
59	ΔP/100m	(kg/cm2/100m)	0.310	0.254	0.603	0.253	0.348	0.012	1.568	1.639	
60	Static Head	(kg/cm2)	0.000	0.000	0.000	0.000	0.000	0.000	0.000	0.000	
61	**Total ΔP**	**(kg/cm2)**	**0.310**	**0.254**	**0.603**	**0.253**	**0.348**	**0.012**	**1.568**	**1.639**	
62	**Outlet Press.**	**(kg/cm2 g)**	**-0.31**	**-0.25**	**-0.60**	**-0.25**	**0.08**	**3.4**	**-1.6**	**-1.6**	
63	**Remarks**										
64											
65			**FLASHING % ASSUED AS 50%**	**FLASHING % ASSUED AS 50%**	**FLASHING % ASSUED AS 50%**	**FLASHING % ASSUED AS 50%**	**FLOWRATE BY VENDOR**	**FLOWRATE BY VENDOR**	**FLOWRATE BY VENDOR**	**FLOWRATE IS ASSUMED**	
66											
67											
68											
69											

PT LOTTE CHEMICAL INDONESIA

LINE HYDRAULIC CALCULATION SHEET (LINE WP5)

LOTTE E&C

1	PROJECT :	LINE PROJECT	JOB NO. :	15005
2	CLIENT :	PT LOTTE CHEMICAL INDONESIA	DOCU. NO. :	LINE-900-BC-4-0001
3	LOCATION :	CILEGON, INDONESIA	P&ID NO. :	REFER TO ROW NO. 10
4	UNIT :	**WP5**	CASE :	DESIGN
5	SERVICE :	**3.8.1 COOLING WATER**	SHEET :	1 OF 23 (UTILITY)

REVISION

	Item			C-201A/B		E-202		C-203A/B		E-203	
7	Line No			CWS-2001	CWS-2001 / 2013	CWS-2002	CWR-2002	CWS-2005	CWS-2005 / 2025	CWS-2006	CWR-2006
8		**From**		**CWS HDR**	**CWS HDR**	**CWS HDR**	**E-202**	**CWS HDR**	**CWS HDR**	**CWS HDR**	**E-203**
9		**To**		**C-201A/B**	**C-201A/B**	**E-202**	**CWR HDR**	**C-203A/B**	**C-203A/B**	**E-203**	**CWR HDR**
10		P&ID No.		902-0003	902-0003	902-0004	902-0004	902-0006	902-0006	902-0007	902-0007
11		Piping Material Class		1C1W	1C1W	1C1W	1C1W	1C1W	1C1W	1C1W	1C1W
12		Pipe Schedule		40	40	40	40	40	40	40	40
13		Pipe Roughness (mm)		0.046	0.046	0.046	0.046	0.046	0.046	0.046	0.046
14		**Fluid**		**CW**	**CW**	**CW**	**CW**	**CW**	**CW**	**CW**	**CW**
15	Calc Mode (L, Vu, Vd)			L	L	L	L	L	L	L	L
16	Temperature	: T	(C)	34.0	34.0	34.0	44.0	34.0	34.0	34.0	44.0
17	Pressure	: P	(kg/cm^2G)	4.30	4.30	4.30	3.30	4.30	4.30	4.30	3.30
18	Density	@ T,P	(kg/m^3)	995.0	995.0	995.0	991.0	995.0	995.0	995.0	991.0
19	Molecular	@ T,P	(-)								
20	Compress. Fact.	@ T,P	(-)								
21	Viscosity	@ T,P	(cP)	0.73	0.73	0.73	0.60	0.73	0.73	0.73	0.60
22	C_P / C_V	@ T,P									
23	M/B Flow Rate		(kg/h)	83,100	41,550	86,694	86,694	9,200	4,600	85,347	85,347
24	Excess Ratio		(-)	1.00	1.00	1.10	1.10	1.00	1.00	1.10	1.10
25	Flow Rate		(kg/h)	83,100	41,550	95,363	95,363	9,200	4,600	93,882	93,882
26	**Line Length**		(m)	**100**	**100**	**100**	**100**	**100**	**100**	**100**	**100**
27	**Pipe Nominal Size**		(inch)	**6**	**4**	**6**	**6**	**3**	**2**	**6**	**6**
28		**Calculation Result**		**OK**	**OK**	**OK**	**OK**	**OK**	**OK**	**OK**	**OK**
29	Inlet Press.	(Input)	(kg/cm^2G)	4.30	4.30	4.30	3.30	4.30	4.30	4.30	3.30
30	Inlet Press.	(Calcul'd)	(kg/cm^2G)	**4.30**	**4.30**	**4.30**	**3.30**	**4.30**	**4.30**	**4.30**	**3.30**
31	Velocity	@ Inlet	(m/sec)	1.24	1.41	1.43	1.43	0.54	0.59	1.41	1.41
32	Reynolds No.	@ Inlet	(-)	259961.50	195810.04	298325.06	362484.71	56892.22	42224.86	293689.86	356852.63
33	d*V*V/2g	@ Inlet	(kg/cm^2)	78.59	101.19	103.50	103.92	14.71	17.85	100.31	100.72
34	4*F*L/D	@ Inlet	(-)	11.17	18.19	11.02	10.83	28.73	46.26	11.04	10.84
35	dP/100m	@ Inlet	(kg/cm^2)	0.09	0.18	0.11	0.11	0.04	0.08	0.11	0.11
36	Outlet Press.	(Input)	(kg/cm^2G)								
37	Outlet Press.	(Calcul'd)	(kg/cm^2G)	**4.21**	**4.12**	**4.19**	**3.19**	**4.26**	**4.22**	**4.19**	**3.19**
38	**Velocity**	**@ Outlet**	**(m/sec)**	**1.24**	**1.41**	**1.43**	**1.43**	**0.54**	**0.59**	**1.41**	**1.41**
39			Limit	4.80	4.80	4.80	4.80	4.80	4.80	4.80	4.80
40	Sonic Velocity	@ Outlet	(m/sec)								
41	Mach No.	@ Outlet	(-)								
42	Reynolds No.	@ Outlet	(-)	259961.50	195810.04	298325.06	362484.71	56892.22	42224.86	293689.86	356852.63
43	d*V*V/2g	@ Outlet	(kg/cm^2)	78.59	101.19	103.50	103.92	14.71	17.85	100.31	100.72
44	4*F*L/D	@ Outlet	(-)	11.17	18.19	11.02	10.83	28.73	46.26	11.04	10.84
45	**dP/100m**	**@ Outlet**	**(kg/cm^2)**	**0.088**	**0.184**	**0.114**	**0.112**	**0.042**	**0.083**	**0.111**	**0.109**
46			Limit								
47	**Straight Pipe dP**		(kg/cm^2)	**0.088**	**0.184**	**0.114**	**0.112**	**0.042**	**0.083**	**0.111**	**0.109**
48	dP of Control Valve		(kg/cm^2)								
49	dP of Heat Exchanger		(kg/cm^2)								
50	dP of Column		(kg/cm^2)								
51	dP of Strainer		(kg/cm^2)								
52	dP of Orifice		(kg/cm^2)								
53	Other dP		(kg/cm^2)								
54	Static Head		(m)								
55			(kg/cm^2)								
56	**Equip dP**		(kg/cm^2)								
57	Pipe Entrance										
58	Pipe Exit										
59	90 Elbow										
60	Tee										
61	Globe Valve										
62	Gate Valve										
63	Check Valve										
64	Butterfly Valve										
65	Ball valve										
66	Contraction										
67	Enlargement										
68	Other's K										
69	**Sum (Ki)**										
70	**Fitting dP**		(kg/cm^2)								
71	**Total dP**		(kg/cm^2)	**0.088**	**0.184**	**0.114**	**0.112**	**0.042**	**0.083**	**0.111**	**0.109**
72	**Remarks**										
73											
74				FLOWRATE BY VENDOR	FLOWRATE BY VENDOR			FLOWRATE BY VENDOR	FLOWRATE BY VENDOR		
75											
76											
77											

PT LOTTE CHEMICAL INDONESIA

LINE HYDRAULIC CALCULATION SHEET (LINE WP5)

LOTTE E&C

1	PROJECT :	LINE PROJECT	JOB NO. :	15005
2	CLIENT :	PT LOTTE CHEMICAL INDONESIA	DOCU. NO. :	LINE-900-BC-4-0001
3	LOCATION :	CILEGON, INDONESIA	P&ID NO. :	REFER TO ROW NO. 10
4	UNIT :	**WP5**	CASE :	DESIGN
5	SERVICE :	**3.8.1 COOLING WATER**	SHEET :	2 OF 23 (UTILITY)

REVISION

	Item			C-205A/B		E-206		C-208A/B		E-209	
7	Line No			CWS-2009	CWS-2009 / 2019	CWS-2010	CWR-2010	CWS-2014	CWS-2014 / 2024	CWS-2015	CWR-2015
8		**From**		**CWS HDR**	**CWS HDR**	**CWS HDR**	**E-206**	**CWS HDR**	**CWS HDR**	**CWS HDR**	**E-209**
9		**To**		**C-205A/B**	**C-205A/B**	**E-206**	**CWR HDR**	**C-208A/B**	**C-208A/B**	**E-209**	**CWR HDR**
10		P&ID No.		902-0010	902-0010	902-0011	902-0011	902-0014	902-0014	902-0015	902-0015
11		Piping Material Class		1C1W	1C1W	1C1W	1C1W	1C1W	1C1W	1C1W	1C1W
12		Pipe Schedule		40	40	40	40	40	40	40	40
13		Pipe Roughness (mm)		0.046	0.046	0.046	0.046	0.046	0.046	0.046	0.046
14		**Fluid**		**CW**	**CW**	**CW**	**CW**	**CW**	**CW**	**CW**	**CW**
15	Calc Mode (L, Vu, Vd)			L	L	L	L	L	L	L	L
16	Temperature	: T	(C)	34.0	34.0	34.0	40.0	34.0	34.0	34.0	44.0
17	Pressure	: P	(kg/cm^2G)	4.30	4.30	4.30	3.30	4.30	4.30	4.30	3.30
18	Density	@ T,P	(kg/m^3)	995.0	995.0	995.0	991.0	995.0	995.0	995.0	991.0
19	Molecular	@ T,P	(-)								
20	Compress. Fact.	@ T,P	(-)								
21	Viscosity	@ T,P	(cP)	0.73	0.73	0.73	0.60	0.73	0.73	0.73	0.60
22	C_P / C_V	@ T,P									
23	M/B Flow Rate		(kg/h)	68,280	34,140	14,683	14,683	37,240	18,620	29,527	29,527
24	Excess Ratio		(-)	1.00	1.00	1.10	1.10	1.00	1.00	1.10	1.10
25	Flow Rate		(kg/h)	68,280	34,140	16,151	16,151	37,240	18,620	32,480	32,480
26	**Line Length**		(m)	**100**	**100**	**100**	**100**	**100**	**100**	**100**	**100**
27	**Pipe Nominal Size**		(inch)	**6**	**4**	**3**	**3**	**4**	**3**	**4**	**4**
28		**Calculation Result**		**OK**	**OK**	**OK**	**OK**	**OK**	**OK**	**OK**	**OK**
29	Inlet Press.	(Input)	(kg/cm^2G)	4.30	4.30	4.30	3.30	4.30	4.30	4.30	3.30
30	Inlet Press.	(Calcul'd)	(kg/cm^2G)	**4.30**	**4.30**	**4.30**	**3.30**	**4.30**	**4.30**	**4.30**	**3.30**
31	Velocity	@ Inlet	(m/sec)	1.02	1.16	0.95	0.95	1.27	1.09	1.10	1.11
32	Reynolds No.	@ Inlet	(-)	213600.14	160889.40	99878.62	121359.13	175498.58	115144.90	153065.01	185984.13
33	d*V*V/2g	@ Inlet	(kg/cm^2)	53.06	68.32	45.34	45.52	81.29	60.25	61.84	62.09
34	4*F*L/D	@ Inlet	(-)	11.41	18.56	26.56	25.96	18.39	26.11	18.67	18.28
35	dP/100m	@ Inlet	(kg/cm^2)	0.06	0.13	0.12	0.12	0.15	0.16	0.12	0.11
36	Outlet Press.	(Input)	(kg/cm^2G)								
37	Outlet Press.	(Calcul'd)	(kg/cm^2G)	**4.24**	**4.17**	**4.18**	**3.18**	**4.15**	**4.14**	**4.18**	**3.19**
38	**Velocity**	**@ Outlet**	**(m/sec)**	**1.02**	**1.16**	**0.95**	**0.95**	**1.27**	**1.09**	**1.10**	**1.11**
39			Limit	4.80	4.80	4.80	4.80	4.80	4.80	4.80	4.80
40	Sonic Velocity	@ Outlet	(m/sec)								
41	Mach No.	@ Outlet	(-)								
42	Reynolds No.	@ Outlet	(-)	213600.14	160889.40	99878.62	121359.13	175498.58	115144.90	153065.01	185984.13
43	d*V*V/2g	@ Outlet	(kg/cm^2)	53.06	68.32	45.34	45.52	81.29	60.25	61.84	62.09
44	4*F*L/D	@ Outlet	(-)	11.41	18.56	26.56	25.96	18.39	26.11	18.67	18.28
45	**dP/100m**	**@ Outlet**	**(kg/cm^2)**	**0.061**	**0.127**	**0.120**	**0.118**	**0.150**	**0.157**	**0.115**	**0.114**
46			Limit								
47	**Straight Pipe dP**		(kg/cm^2)	**0.061**	**0.127**	**0.120**	**0.118**	**0.150**	**0.157**	**0.115**	**0.114**
48	dP of Control Valve		(kg/cm^2)								
49	dP of Heat Exchanger		(kg/cm^2)								
50	dP of Column		(kg/cm^2)								
51	dP of Strainer		(kg/cm^2)								
52	dP of Orifice		(kg/cm^2)								
53	Other dP		(kg/cm^2)								
54	Static Head		(m)								
55			(kg/cm^2)								
56	**Equip dP**		(kg/cm^2)								
57	Pipe Entrance										
58	Pipe Exit										
59	90 Elbow										
60	Tee										
61	Globe Valve										
62	Gate Valve										
63	Check Valve										
64	Butterfly Valve										
65	Ball valve										
66	Contraction										
67	Enlargement										
68	Other's K										
69	**Sum (Ki)**										
70	**Fitting dP**		(kg/cm^2)								
71	**Total dP**		(kg/cm^2)	**0.061**	**0.127**	**0.120**	**0.118**	**0.150**	**0.157**	**0.115**	**0.114**
72	**Remarks**										
73											
74				FLOWRATE BY VENDOR	FLOWRATE BY VENDOR			FLOWRATE BY VENDOR	FLOWRATE BY VENDOR		
75											
76											
77											

PT LOTTE CHEMICAL INDONESIA

LINE HYDRAULIC CALCULATION SHEET (LINE WP5)

LOTTE E&C

1	PROJECT :	LINE PROJECT	JOB NO. :	15005
2	CLIENT :	PT LOTTE CHEMICAL INDONESIA	DOCU. NO. :	LINE-900-BC-4-0001
3	LOCATION :	CILEGON, INDONESIA	P&ID NO. :	REFER TO ROW NO. 10
4	UNIT :	**WP5**	CASE :	DESIGN
5	SERVICE :	**3.8.1 COOLING WATER**	SHEET :	3 OF 23 (UTILITY)

REVISION

6	**Item**			**W-202**		**E-301**					
7	Line No			CWS-2020	CWS-2021	CWR-3000	CWR-3001				
8		**From**		**CWS HDR**	**CWS-2020**	**CWR HDR**	**E-301**				
9		**To**		**W-202**	**W-202 (TP-01)**	**E-301**	**COOLING TOWER**				
10		P&ID No.		902-0016	902-0016	903-0002	903-0002				
11		Piping Material Class		1C1W	1C1W	1C1W	1C1W				
12		Pipe Schedule		40	40	STD	STD				
13		Pipe Roughness (mm)		0.046	0.046	0.046	0.046				
14		**Fluid**		**CW**	**CW**	**CW**	**CW**				
15	Calc Mode (L, Vu, Vd)			L	L	L	L				
16	Temperature	: T	(C)	34.0	34.0	44.0	34.0				
17	Pressure	: P	(kg/cm^2G)	4.30	4.30	2.00	1.50				
18	Density	@ T,P	(kg/m^3)	995.0	995.0	991.0	994.5				
19	Molecular	@ T,P	(-)								
20	Compress. Fact.	@ T,P	(-)								
21	Viscosity	@ T,P	(cP)	0.73	0.73	0.60	0.73				
22	C_P / C_V	@ T,P									
23	M/B Flow Rate		(kg/h)	476,600	86,600	448,720	448,720				
24	Excess Ratio		(-)	1.00	1.00	1.10	1.10				
25	Flow Rate		(kg/h)	476,600	86,600	493,592	493,592				
26	**Line Length**		(m)	**100**	**100**	**100**	**100**				
27	**Pipe Nominal Size**		(inch)	**10**	**4**	**14**	**14**				
28		**Calculation Result**		**OK**	**OK**	**OK**	**OK**				
29	Inlet Press.	(Input)	(kg/cm^2G)	4.30	4.30	2.00	1.50				
30	Inlet Press.	(Calcul'd)	(kg/cm^2G)	**4.30**	**4.30**	**2.00**	**1.50**				
31	Velocity	@ Inlet	(m/sec)	2.62	2.94	1.56	1.55				
32	Reynolds No.	@ Inlet	(-)	902441.17	410294.64	864517.66	707654.29				
33	d*V*V/2g	@ Inlet	(kg/cm^2)	347.00	439.59	122.22	121.79				
34	4*F*L/D	@ Inlet	(-)	5.72	17.15	4.19	4.26				
35	dP/100m	@ Inlet	(kg/cm^2)	0.20	0.75	0.05	0.05				
36	Outlet Press.	(Input)	(kg/cm^2G)								
37	Outlet Press.	(Calcul'd)	(kg/cm^2G)	**4.10**	**3.55**	**1.95**	**1.45**				
38	**Velocity**	**@ Outlet**	**(m/sec)**	**2.62**	**2.94**	**1.56**	**1.55**				
39			Limit	4.80	4.80	4.80	4.80				
40	Sonic Velocity	@ Outlet	(m/sec)								
41	Mach No.	@ Outlet	(-)								
42	Reynolds No.	@ Outlet	(-)	902441.17	410294.64	864517.66	707654.29				
43	d*V*V/2g	@ Outlet	(kg/cm^2)	347.00	439.59	122.22	121.79				
44	4*F*L/D	@ Outlet	(-)	5.72	17.15	4.19	4.26				
45	**dP/100m**	**@ Outlet**	**(kg/cm^2)**	**0.199**	**0.754**	**0.051**	**0.052**				
46			Limit								
47	**Straight Pipe dP**		(kg/cm^2)	**0.199**	**0.754**	**0.051**	**0.052**				
48	dP of Control Valve		(kg/cm^2)								
49	dP of Heat Exchanger		(kg/cm^2)								
50	dP of Column		(kg/cm^2)								
51	dP of Strainer		(kg/cm^2)								
52	dP of Orifice		(kg/cm^2)								
53	Other dP		(kg/cm^2)								
54	Static Head		(m)								
55			(kg/cm^2)								
56	**Equip dP**		(kg/cm^2)								
57	Pipe Entrance										
58	Pipe Exit										
59	90 Elbow										
60	Tee										
61	Globe Valve										
62	Gate Valve										
63	Check Valve										
64	Butterfly Valve										
65	Ball valve										
66	Contraction										
67	Enlargement										
68	Other's K										
69	**Sum (Ki)**										
70	**Fitting dP**		(kg/cm^2)								
71	**Total dP**		(kg/cm^2)	**0.199**	**0.754**	**0.051**	**0.052**				
72	**Remarks**										
73											
74				FLOWRATE BY VENDOR	FLOWRATE BY VENDOR						
75											
76											
77											

PT LOTTE CHEMICAL INDONESIA

LINE HYDRAULIC CALCULATION SHEET (LINE WP5)

LOTTE E&C

1	PROJECT :	LINE PROJECT	JOB NO. :	15005
2	CLIENT :	PT LOTTE CHEMICAL INDONESIA	DOCU. NO. :	LINE-900-BC-4-0001
3	LOCATION :	CILEGON, INDONESIA	P&ID NO. :	REFER TO ROW NO. 10
4	UNIT :	**WP5**	CASE :	DESIGN
5	SERVICE :	**3.8.1 COOLING WATER**	SHEET :	4 OF 23 (UTILITY)

REVISION

	Item			SUB HDR	SUB HDR	SUB HDR	SUB HDR	SUB HDR			
7	Line No			CWS-2301	CWS-2301	CWS-1301	CWS-3301	CWS-4301	CWS-4301	CWS-4302	
8		**From**		**CWS-0009**	**CWS-0009**	**WP4 CWS HDR**	**CWS-0018**	**CWS-0016**	**CWS-4301**	**CWS-4301**	
9		**To**		**USER**	**USER**	**USER**	**USER**	**USER**	**USER (EAST)**	**USER (WEST)**	
10		P&ID No.		904-0103	904-0103	904-0103	904-0103	904-0103	904-0103	904-0103	
11		Piping Material Class		1C1W	1C1W	1C1W	1C1W	1C1W	1C1W	1C1W	
12		Pipe Schedule		STD	STD	40	40	40	40	40	
13		Pipe Roughness (mm)		0.046	0.046	0.046	0.046	0.046	0.046	0.046	
14		**Fluid**		**CW**	**CW**	**CW**	**CW**	**CW**	**CW**	**CW**	
15	Calc Mode (L, Vu, Vd)			L	L	L	L	L	L	L	
16	Temperature	: T	(C)	34.0	34.0	34.0	34.0	34.0	34.0	34.0	
17	Pressure	: P	(kg/cm^2G)	4.30	4.30	4.30	4.30	4.30	4.30	4.30	
18	Density	@ T,P	(kg/m^3)	995.0	995.0	995.0	995.0	995.0	995.0	995.0	
19	Molecular	@ T,P	(-)								
20	Compress. Fact.	@ T,P	(-)								
21	Viscosity	@ T,P	(cP)	0.73	0.73	0.73	0.73	0.73	0.73	0.73	
22	C_P / C_V	@ T,P									
23	M/B Flow Rate		(kg/h)	157,151	917,096	15,600	23,400	31,200	22,200	9,000	
24	Excess Ratio		(-)	1.00	1.00	1.00	1.00	1.00	1.00	1.00	
25	Flow Rate		(kg/h)	157,151	917,096	15,600	23,400	31,200	22,200	9,000	
26	**Line Length**		(m)	**100**	**100**	**72**	**180**	**240**	**192**	**114**	
27	**Pipe Nominal Size**		(inch)	**12**	**16**	**2**	**2**	**3**	**3**	**2**	
28		**Calculation Result**		**OK**	**OK**	**OK**	**OK**	**OK**	**OK**	**OK**	
29	Inlet Press.	(Input)	(kg/cm^2G)	4.30	4.30	4.30	4.30	4.30	4.30	4.30	
30	Inlet Press.	(Calcul'd)	(kg/cm^2G)	**4.30**	**4.30**	**4.30**	**4.30**	**4.30**	**4.30**	**4.30**	
31	Velocity	@ Inlet	(m/sec)	0.60	2.17	2.01	3.02	1.83	1.30	1.16	
32	Reynolds No.	@ Inlet	(-)	248468.82	1140987.80	143197.36	214796.04	192938.83	137283.40	82613.86	
33	d*V*V/2g	@ Inlet	(kg/cm^2)	18.34	239.47	205.33	461.99	169.17	85.65	68.34	
34	4*F*L/D	@ Inlet	(-)	5.34	3.50	28.86	70.08	59.51	49.18	48.21	
35	dP/100m	@ Inlet	(kg/cm^2)	0.01	0.08	0.82	1.80	0.42	0.22	0.29	
36	Outlet Press.	(Input)	(kg/cm^2G)								
37	Outlet Press.	(Calcul'd)	(kg/cm^2G)	**4.29**	**4.22**	**3.71**	**1.06**	**3.29**	**3.88**	**3.97**	
38	**Velocity**	**@ Outlet**	**(m/sec)**	**0.60**	**2.17**	**2.01**	**3.02**	**1.83**	**1.30**	**1.16**	
39			Limit	4.80	4.80	4.80	4.80	4.80	4.80	4.80	
40	Sonic Velocity	@ Outlet	(m/sec)								
41	Mach No.	@ Outlet	(-)								
42	Reynolds No.	@ Outlet	(-)	248468.82	1140987.80	143197.36	214796.04	192938.83	137283.40	82613.86	
43	d*V*V/2g	@ Outlet	(kg/cm^2)	18.34	239.47	205.33	461.99	169.17	85.65	68.34	
44	4*F*L/D	@ Outlet	(-)	5.34	3.50	28.86	70.08	59.51	49.18	48.21	
45	**dP/100m**	**@ Outlet**	**(kg/cm^2)**	**0.010**	**0.084**	**0.823**	**1.799**	**0.420**	**0.219**	**0.289**	
46			Limit								
47	**Straight Pipe dP**		(kg/cm^2)	**0.010**	**0.084**	**0.593**	**3.238**	**1.007**	**0.421**	**0.329**	
48	dP of Control Valve		(kg/cm^2)								
49	dP of Heat Exchanger		(kg/cm^2)								
50	dP of Column		(kg/cm^2)								
51	dP of Strainer		(kg/cm^2)								
52	dP of Orifice		(kg/cm^2)								
53	Other dP		(kg/cm^2)								
54	Static Head		(m)								
55			(kg/cm^2)								
56	**Equip dP**		(kg/cm^2)								
57	Pipe Entrance										
58	Pipe Exit										
59	90 Elbow										
60	Tee										
61	Globe Valve										
62	Gate Valve										
63	Check Valve										
64	Butterfly Valve										
65	Ball valve										
66	Contraction										
67	Enlargement										
68	Other's K										
69	**Sum (Ki)**										
70	**Fitting dP**		(kg/cm^2)								
71	**Total dP**		(kg/cm^2)	**0.010**	**0.084**	**0.593**	**3.238**	**1.007**	**0.421**	**0.329**	
72	**Remarks**										
73											
74											
75											
76											
77											

PT LOTTE CHEMICAL INDONESIA

LINE HYDRAULIC CALCULATION SHEET (LINE WP5)

LOTTE E&C

1	PROJECT :	LINE PROJECT	JOB NO. :	15005
2	CLIENT :	PT LOTTE CHEMICAL INDONESIA	DOCU. NO. :	LINE-900-BC-4-0001
3	LOCATION :	CILEGON, INDONESIA	P&ID NO. :	REFER TO ROW NO. 10
4	UNIT :	**WP5**	CASE :	DESIGN
5	SERVICE :	**3.8.2 STEAM, STEAM CONDENSATE**	SHEET :	5 OF 23 (UTILITY)

REVISION

	Item			E-201		E-221		E-205		E-208	
7	Line No			LS-2001	LSC-2001	LS-2003	LSC-2008	LS-2010	LSC-2010	LS-2011	LSC-2011
8		**From**		**LS HDR**	**E-201**	**LS HDR**	**E-221**	**LS HDR**	**E-205**	**LS HDR**	**E-208**
9		**To**		**E-201**	**D-240**	**E-221**	**D-240**	**E-205**	**LSC HDR**	**E-208**	**LSC HDR**
10		P&ID No.		902-0002	902-0002	902-0002	902-0002	902-0009	902-0009	902-0013	902-0013
11		Piping Material Class		1C1S	1C1W	1C1S	1C1W	1C1S	1C1W	1C1S	1C1W
12		Pipe Schedule		40	40	40	40	40	40	40	40
13		Pipe Roughness (mm)		0.046	0.046	0.046	0.046	0.046	0.046	0.046	0.046
14		**Fluid**		**LP STEAM**	**LP COND.**	**LP STEAM**	**LP COND.**	**LP STEAM**	**LP COND.**	**LP STEAM**	**LP COND.**
15	Calc Mode (L, Vu, Vd)			Vu	L	Vu	L	Vu	L	Vu	L
16	Temperature	: T	(C)	160.0	140.0	160.0	140.0	160.0	140.0	160.0	140.0
17	Pressure	: P	(kg/cm^2G)	3.50	3.00	3.50	3.00	3.50	3.00	3.50	3.00
18	Density	@ T,P	(kg/m^3)		925.9		925.9		925.9		925.9
19	Molecular	@ T,P	(-)	18.02		18.02		18.02		18.02	
20	Compress. Fact.	@ T,P	(-)	1.00		1.00		1.00		1.00	
21	Viscosity	@ T,P	(cP)	0.01	0.20	0.01	0.20	0.01	0.20	0.01	0.20
22	C_P / C_V	@ T,P		1.30		1.30		1.30		1.30	
23	M/B Flow Rate		(kg/h)	14,310	14,310	2,630	2,630	4,646	4,646	6,075	6,075
24	Excess Ratio		(-)	1.10	1.10	1.10	1.10	1.10	1.10	1.10	1.10
25	Flow Rate		(kg/h)	15,741	15,741	2,893	2,893	5,111	5,111	6,683	6,683
26	**Line Length**		(m)	**100**	**100**	**100**	**100**	**100**	**100**	**100**	**100**
27	**Pipe Nominal Size**		(inch)	**12**	**6**	**6**	**3**	**8**	**4**	**8**	**4**
28		**Calculation Result**		**OK**	**OK**	**OK**	**OK**	**OK**	**OK**	**OK**	**OK**
29	Inlet Press.	(Input)	(kg/cm^2G)	3.50	3.00	3.50	3.00	3.50	3.00	3.50	3.00
30	Inlet Press.	(Calcul'd)	(kg/cm^2G)	**3.50**	**3.00**	**3.50**	**3.00**	**3.50**	**3.00**	**3.50**	**3.00**
31	Velocity	@ Inlet	(m/sec)	27.20	0.25	19.37	0.18	19.76	0.19	25.84	0.24
32	Reynolds No.	@ Inlet	(-)	1836035.52	185328.67	664191.53	67331.11	891624.30	90643.80	1165866.90	118523.69
33	d*V*V/2g	@ Inlet	(kg/cm^2)	83.99	3.03	42.58	1.56	44.31	1.65	75.76	2.81
34	4*F*L/D	@ Inlet	(-)	4.50	11.61	10.37	28.00	7.43	19.95	7.33	19.25
35	dP/100m	@ Inlet	(kg/cm^2)	0.04	0.00	0.04	0.00	0.03	0.00	0.06	0.01
36	Outlet Press.	(Input)	(kg/cm^2G)								
37	Outlet Press.	(Calcul'd)	(kg/cm^2G)	**3.26**	**3.00**	**3.25**	**3.00**	**3.27**	**3.00**	**3.24**	**2.99**
38	**Velocity**	**@ Outlet**	**(m/sec)**	**28.72**	**0.25**	**20.48**	**0.18**	**20.84**	**0.19**	**27.40**	**0.24**
39			Limit	76.20	0.30	76.20	0.30	76.20	0.30	76.20	0.30
40	Sonic Velocity	@ Outlet	(m/sec)	509.56		509.56		509.56		509.56	
41	Mach No.	@ Outlet	(-)	0.06		0.04		0.04		0.05	
42	Reynolds No.	@ Outlet	(-)	1836035.52	185328.67	664191.53	67331.11	891624.30	90643.80	1165866.90	118523.69
43	d*V*V/2g	@ Outlet	(kg/cm^2)	88.68	3.03	45.02	1.56	46.73	1.65	80.34	2.81
44	4*F*L/D	@ Outlet	(-)	4.50	11.61	10.37	28.00	7.43	19.95	7.33	19.25
45	**dP/100m**	**@ Outlet**	**(kg/cm^2)**	**0.040**	**0.004**	**0.047**	**0.004**	**0.035**	**0.003**	**0.059**	**0.005**
46			Limit	0.060		0.060		0.060		0.060	
47	**Straight Pipe dP**		(kg/cm^2)	**0.040**	**0.004**	**0.046**	**0.004**	**0.034**	**0.003**	**0.058**	**0.005**
48	dP of Control Valve		(kg/cm^2)								
49	dP of Heat Exchanger		(kg/cm^2)								
50	dP of Column		(kg/cm^2)								
51	dP of Strainer		(kg/cm^2)								
52	dP of Orifice		(kg/cm^2)	0.2		0.2		0.2		0.2	
53	Other dP		(kg/cm^2)								
54	Static Head		(m)								
55			(kg/cm^2)								
56	**Equip dP**		(kg/cm^2)	**0.200**		**0.200**		**0.200**		**0.200**	
57	Pipe Entrance										
58	Pipe Exit										
59	90 Elbow										
60	Tee										
61	Globe Valve										
62	Gate Valve										
63	Check Valve										
64	Butterfly Valve										
65	Ball valve										
66	Contraction										
67	Enlargement										
68	Other's K										
69	**Sum (Ki)**										
70	**Fitting dP**		(kg/cm^2)								
71	**Total dP**		(kg/cm^2)	**0.240**	**0.004**	**0.246**	**0.004**	**0.234**	**0.003**	**0.258**	**0.005**
72	**Remarks**										
73											
74											
75											
76											
77											

PT LOTTE CHEMICAL INDONESIA

LINE HYDRAULIC CALCULATION SHEET (LINE WP5)

LOTTE E&C

1	PROJECT :	LINE PROJECT			JOB NO. :	15005					REVISION
2	CLIENT :	PT LOTTE CHEMICAL INDONESIA			DOCU. NO. :	LINE-900-BC-4-0001					
3	LOCATION :	CILEGON, INDONESIA			P&ID NO. :	REFER TO ROW NO. 10					
4	UNIT :	**WP5**			CASE :	DESIGN					
5	SERVICE :	**3.8.2 STEAM, STEAM CONDENSATE**			SHEET :	6 OF 23 (UTILITY)					
6	**Item**		**D-240 INLET**	**E-341**							
7	Line No		LSC-2002	LS-3001	LSC-3001						
8		**From**	**SUB-HDR**	**LS HDR**	**E-341**						
9		**To**	**D-240**	**E-341**	**D-341**						
10		P&ID No.	902-0002	903-0002	903-0002						
11		Piping Material Class	1C1W	1C1S	1C1W						
12		Pipe Schedule	40	40	40						
13		Pipe Roughness (mm)	0.046	0.046	0.046						
14		**Fluid**	**LP COND.**	**LP STEAM**	**LP COND.**						
15	Calc Mode (L, Vu, Vd)		L	Vu	L						
16	Temperature	: T (C)	140.0	160.0	143.2						
17	Pressure	: P (kg/cm^2G)	3.00	3.50	3.00						
18	Density	@ T,P (kg/m^3)	925.9		923.0						
19	Molecular	@ T,P (-)		18.02							
20	Compress. Fact.	@ T,P (-)		1.00							
21	Viscosity	@ T,P (cP)	0.20	0.01	0.19						
22	C_P / C_V	@ T,P		1.30							
23	M/B Flow Rate	(kg/h)	27,661	2,617	2,617						
24	Excess Ratio	(-)	1.10	1.10	1.10						
25	Flow Rate	(kg/h)	30,427	2,879	2,879						
26	**Line Length**	(m)	**100**	**100**	**100**						
27	**Pipe Nominal Size**	(inch)	**10**	**6**	**3**						
28		**Calculation Result**	**OK**	**OK**	**OK**						
29	Inlet Press.	(Input) (kg/cm^2G)	3.00	3.50	3.00						
30	Inlet Press.	(Calcul'd) (kg/cm^2G)	**3.00**	**3.50**	**3.00**						
31	Velocity	@ Inlet (m/sec)	0.18	19.27	0.18						
32	Reynolds No.	@ Inlet (-)	216834.16	660908.45	68761.40						
33	d*V*V/2g	@ Inlet (kg/cm^2)	1.52	42.16	1.55						
34	4*F*L/D	@ Inlet (-)	6.60	10.37	27.92						
35	dP/100m	@ Inlet (kg/cm^2)	0.00	0.04	0.00						
36	Outlet Press.	(Input) (kg/cm^2G)									
37	Outlet Press.	(Calcul'd) (kg/cm^2G)	**3.00**	**3.25**	**3.00**						
38	**Velocity**	**@ Outlet (m/sec)**	**0.18**	**20.38**	**0.18**						
39		Limit	0.30	76.20	0.30						
40	Sonic Velocity	@ Outlet (m/sec)		509.56							
41	Mach No.	@ Outlet (-)		0.04							
42	Reynolds No.	@ Outlet (-)	216834.16	660908.45	68761.40						
43	d*V*V/2g	@ Outlet (kg/cm^2)	1.52	44.58	1.55						
44	4*F*L/D	@ Outlet (-)	6.60	10.37	27.92						
45	**dP/100m**	**@ Outlet (kg/cm^2)**	**0.001**	**0.046**	**0.004**						
46		Limit		0.060							
47	**Straight Pipe dP**	(kg/cm^2)	**0.001**	**0.045**	**0.004**						
48	dP of Control Valve	(kg/cm^2)									
49	dP of Heat Exchanger	(kg/cm^2)									
50	dP of Column	(kg/cm^2)									
51	dP of Strainer	(kg/cm^2)									
52	dP of Orifice	(kg/cm^2)		0.2							
53	Other dP	(kg/cm^2)									
54	Static Head	(m)									
55		(kg/cm^2)									
56	**Equip dP**	(kg/cm^2)		**0.200**							
57	Pipe Entrance										
58	Pipe Exit										
59	90 Elbow										
60	Tee										
61	Globe Valve										
62	Gate Valve										
63	Check Valve										
64	Butterfly Valve										
65	Ball valve										
66	Contraction										
67	Enlargement										
68	Other's K										
69	**Sum (Ki)**										
70	**Fitting dP**	(kg/cm^2)									
71	**Total dP**	(kg/cm^2)	**0.001**	**0.245**	**0.004**						
72	**Remarks**										
73											
74											
75											
76											
77											

PT LOTTE CHEMICAL INDONESIA

LINE HYDRAULIC CALCULATION SHEET (LINE WP5)

LOTTE E&C

1	PROJECT :	LINE PROJECT	JOB NO. :	15005
2	CLIENT :	PT LOTTE CHEMICAL INDONESIA	DOCU. NO. :	LINE-900-BC-4-0001
3	LOCATION :	CILEGON, INDONESIA	P&ID NO. :	REFER TO ROW NO. 10
4	UNIT :	**WP5**	CASE :	DESIGN
5	SERVICE :	**3.8.2 STEAM, STEAM CONDENSATE**	SHEET :	7 OF 23 (UTILITY)

REVISION

6	**Item**			**TK-409A/B COIL**		**P-429A/B JACKET**					
7	Line No			LS-4001 / 4002	LSC-4001 / 4002	LS-4012	LSC-4012				
8		**From**		**LS HDR**	**TK-409A/B**	**LS HDR**	**P-429A/B**				
9		**To**		**TK-409A/B**	**LSC HDR**	**P-429A/B**	**LSC HDR**				
10		P&ID No.		904-0009	904-0009	904-0009	904-0009				
11		Piping Material Class		1C1S	1C1W	1C1S	1C1W				
12		Pipe Schedule		80	80	80	80				
13		Pipe Roughness (mm)		0.046	0.046	0.046	0.046				
14		**Fluid**		**LP STEAM**	**LP COND.**	**LP STEAM**	**LP COND.**				
15	Calc Mode (L, Vu, Vd)			Vu	L	Vu	L				
16	Temperature	: T	(C)	160.0	120.1	160.0	120.1				
17	Pressure	: P	(kg/cm^2G)	3.50	1.00	3.50	1.00				
18	Density	@ T,P	(kg/m^3)		942.7		942.7				
19	Molecular	@ T,P	(-)	18.02		18.02					
20	Compress. Fact.	@ T,P	(-)	1.00		1.00					
21	Viscosity	@ T,P	(cP)	0.01	0.23	0.01	0.23				
22	C_P / C_V	@ T,P		1.30		1.30					
23	M/B Flow Rate		(kg/h)	80	80	1.6	1.6				
24	Excess Ratio		(-)	1.10	1.10	1.00	1.00				
25	Flow Rate		(kg/h)	88	88	1.6	1.6				
26	**Line Length**		(m)	**100**	**100**	**100**	**100**				
27	**Pipe Nominal Size**		(inch)	**2**	**1 1/2**	**3/4**	**3/4**				
28		**Calculation Result**		**OK**	**OK**	**OK**	**OK**				
29	Inlet Press.	(Input)	(kg/cm^2G)	3.50	1.00	3.50	1.00				
30	Inlet Press.	(Calcul'd)	(kg/cm^2G)	**3.50**	**1.00**	**3.50**	**1.00**				
31	Velocity	@ Inlet	(m/sec)	5.76	0.02	0.72	0.00				
32	Reynolds No.	@ Inlet	(-)	63195.05	3567.21	3002.03	131.09				
33	d*V*V/2g	@ Inlet	(kg/cm^2)	3.77	0.02	0.06	0.00				
34	4*F*L/D	@ Inlet	(-)	46.93	111.52	242.47	2589.94				
35	dP/100m	@ Inlet	(kg/cm^2)	0.02	0.00	0.00	0.00				
36	Outlet Press.	(Input)	(kg/cm^2G)								
37	Outlet Press.	(Calcul'd)	(kg/cm^2G)	**3.48**	**1.00**	**3.50**	**1.00**				
38	**Velocity**	**@ Outlet**	**(m/sec)**	**5.79**	**0.02**	**0.72**	**0.00**				
39			Limit	76.20	0.30	76.20	76.20				
40	Sonic Velocity	@ Outlet	(m/sec)	509.56		509.56					
41	Mach No.	@ Outlet	(-)	0.01		0.00					
42	Reynolds No.	@ Outlet	(-)	63195.05	3567.21	3002.03	131.09				
43	d*V*V/2g	@ Outlet	(kg/cm^2)	3.79	0.02	0.06	0.00				
44	4*F*L/D	@ Outlet	(-)	46.93	111.52	242.47	2589.94				
45	**dP/100m**	**@ Outlet**	**(kg/cm^2)**	**0.018**	**0.000**	**0.001**	**0.000**				
46			Limit	0.060		0.060					
47	**Straight Pipe dP**		(kg/cm^2)	**0.018**	**0.000**	**0.001**	**0.000**				
48	dP of Control Valve		(kg/cm^2)								
49	dP of Heat Exchanger		(kg/cm^2)								
50	dP of Column		(kg/cm^2)								
51	dP of Strainer		(kg/cm^2)								
52	dP of Orifice		(kg/cm^2)								
53	Other dP		(kg/cm^2)								
54	Static Head		(m)								
55			(kg/cm^2)								
56	**Equip dP**		(kg/cm^2)								
57	Pipe Entrance										
58	Pipe Exit										
59	90 Elbow										
60	Tee										
61	Globe Valve										
62	Gate Valve										
63	Check Valve										
64	Butterfly Valve										
65	Ball valve										
66	Contraction										
67	Enlargement										
68	Other's K										
69	**Sum (Ki)**										
70	**Fitting dP**		(kg/cm^2)								
71	**Total dP**		(kg/cm^2)	**0.018**	**0.000**	**0.001**	**0.000**				
72	**Remarks**										
73											
74						FLOWRATE BY VENDOR	FLOWRATE BY VENDOR				
75											
76											
77											

PT LOTTE CHEMICAL INDONESIA

LINE HYDRAULIC CALCULATION SHEET (LINE WP5)

LOTTE E&C

1	PROJECT :	LINE PROJECT				JOB NO. :	15005				REVISION
2	CLIENT :	PT LOTTE CHEMICAL INDONESIA				DOCU. NO. :	LINE-900-BC-4-0001				
3	LOCATION :	CILEGON, INDONESIA				P&ID NO. :	REFER TO ROW NO. 10				
4	UNIT :	**WP5**				CASE :	DESIGN				
5	SERVICE :	**3.8.2 STEAM, STEAM CONDENSATE**				SHEET :	8 OF 23 (UTILITY)				
6	**Item**		**J-141**	**J-441**	**J-442**	**D-442**					
7	Line No		LS-1000	LS-4004	LS-4005	LS-4006	LSC-4006				
8		**From**	**LS HDR**	**LS HDR**	**LS HDR**	**LS HDR**	**D-442**				
9		**To**	**J-141**	**J-441**	**J-442**	**D-442**	**LSC HDR**				
10		P&ID No.	904-0101	904-0101	904-0101	904-0101	904-0101				
11		Piping Material Class	1C1S	1C1S	1C1S	1C1S	1C1W				
12		Pipe Schedule	80	80	80	80	80				
13		Pipe Roughness (mm)	0.046	0.046	0.046	0.046	0.046				
14		**Fluid**	**LP STEAM**	**LP STEAM**	**LP STEAM**	**LP STEAM**	**LP COND.**				
15	Calc Mode (L, Vu, Vd)		Vu	Vu	Vu	Vu	L				
16	Temperature	: T (C)	160.0	160.0	160.0	160.0	120.1				
17	Pressure	: P (kg/cm^2G)	3.50	3.50	3.50	3.50	1.00				
18	Density	@ T,P (kg/m^3)					942.7				
19	Molecular	@ T,P (-)	18.02	18.02	18.02	18.02					
20	Compress. Fact.	@ T,P (-)	1.00	1.00	1.00	1.00					
21	Viscosity	@ T,P (cP)	0.01	0.01	0.01	0.01	0.23				
22	C_P / C_V	@ T,P	1.30	1.30	1.30	1.30					
23	M/B Flow Rate	(kg/h)	180	180	180	23	23				
24	Excess Ratio	(-)	1.10	1.10	1.10	1.10	1.10				
25	Flow Rate	(kg/h)	198	198	198	25	25				
26	**Line Length**	(m)	**100**	**100**	**100**	**100**	**100**				
27	**Pipe Nominal Size**	(inch)	**1 1/2**	**1 1/2**	**1 1/2**	**1**	**1**				
28		**Calculation Result**	**OK**	**OK**	**OK**	**OK**	**OK**				
29	Inlet Press.	(Input) (kg/cm^2G)	3.50	3.50	3.50	3.50	1.00				
30	Inlet Press.	(Calcul'd) (kg/cm^2G)	**3.50**	**3.50**	**3.50**	**3.50**	**1.00**				
31	Velocity	@ Inlet (m/sec)	21.67	21.67	21.67	6.80	0.02				
32	Reynolds No.	@ Inlet (-)	131286.11	131286.11	131286.11	36808.00	1607.34				
33	d*V*V/2g	@ Inlet (kg/cm^2)	53.31	53.31	53.31	5.25	0.01				
34	4*F*L/D	@ Inlet (-)	58.71	58.71	58.71	111.74	163.79				
35	dP/100m	@ Inlet (kg/cm^2)	0.31	0.31	0.31	0.06	0.00				
36	Outlet Press.	(Input) (kg/cm^2G)									
37	Outlet Press.	(Calcul'd) (kg/cm^2G)	**3.17**	**3.17**	**3.17**	**3.44**	**1.00**				
38	**Velocity**	**@ Outlet (m/sec)**	**23.35**	**23.35**	**23.35**	**6.89**	**0.02**				
39		Limit	76.20	76.20	76.20	76.20	0.30				
40	Sonic Velocity	@ Outlet (m/sec)	509.56	509.56	509.56	509.56					
41	Mach No.	@ Outlet (-)	0.05	0.05	0.05	0.01					
42	Reynolds No.	@ Outlet (-)	131286.11	131286.11	131286.11	36808.00	1607.34				
43	d*V*V/2g	@ Outlet (kg/cm^2)	57.43	57.43	57.43	5.32	0.01				
44	4*F*L/D	@ Outlet (-)	58.71	58.71	58.71	111.74	163.79				
45	**dP/100m**	**@ Outlet (kg/cm^2)**	**0.337**	**0.337**	**0.337**	**0.059**	**0.000**				
46		Limit				0.060					
47	**Straight Pipe dP**	(kg/cm^2)	**0.325**	**0.325**	**0.325**	**0.059**	**0.000**				
48	dP of Control Valve	(kg/cm^2)									
49	dP of Heat Exchanger	(kg/cm^2)									
50	dP of Column	(kg/cm^2)									
51	dP of Strainer	(kg/cm^2)									
52	dP of Orifice	(kg/cm^2)									
53	Other dP	(kg/cm^2)									
54	Static Head	(m)									
55		(kg/cm^2)									
56	**Equip dP**	(kg/cm^2)									
57	Pipe Entrance										
58	Pipe Exit										
59	90 Elbow										
60	Tee										
61	Globe Valve										
62	Gate Valve										
63	Check Valve										
64	Butterfly Valve										
65	Ball valve										
66	Contraction										
67	Enlargement										
68	Other's K										
69	**Sum (Ki)**										
70	**Fitting dP**	(kg/cm^2)									
71	**Total dP**	(kg/cm^2)	**0.325**	**0.325**	**0.325**	**0.059**	**0.000**				
72	**Remarks**										
73											
74			**FLOWRATE BY VENDOR**	**FLOWRATE BY VENDOR**	**FLOWRATE BY VENDOR**						
75											
76											
77											

PT LOTTE CHEMICAL INDONESIA

LINE HYDRAULIC CALCULATION SHEET (LINE WP5)

LOTTE E&C

1	PROJECT :	LINE PROJECT				JOB NO. :	15005				REVISION
2	CLIENT :	PT LOTTE CHEMICAL INDONESIA				DOCU. NO. :	LINE-900-BC-4-0001				
3	LOCATION :	CILEGON, INDONESIA				P&ID NO. :	REFER TO ROW NO. 10				
4	UNIT :	**WP5**				CASE :	DESIGN				
5	SERVICE :	**3.8.2 STEAM, STEAM CONDENSATE**				SHEET :	9 OF 23 (UTILITY)				
6	**Item**		**J-150**	**J-350**	**J-450**	**J-451**					
7	Line No		LS-1001	LS-3005	LS-4009	LS-4011					
8		**From**	**LS HDR**	**LS HDR**	**LS HDR**	**LS HDR**					
9		**To**	**J-150**	**J-350**	**J-450**	**J-451**					
10		P&ID No.	904-0102-B	904-0102-B	904-0102-B	904-0102-B					
11		Piping Material Class	1C1S	1C1S	1C1S	1C1S					
12		Pipe Schedule	80	80	80	80					
13		Pipe Roughness (mm)	0.046	0.046	0.046	0.046					
14		**Fluid**	**LP STEAM**	**LP STEAM**	**LP STEAM**	**LP STEAM**					
15	Calc Mode (L, Vu, Vd)		Vu	Vu	Vu	Vu					
16	Temperature	: T (C)	160.0	160.0	160.0	160.0					
17	Pressure	: P (kg/cm^2G)	3.50	3.50	3.50	3.50					
18	Density	@ T,P (kg/m^3)									
19	Molecular	@ T,P (-)	18.02	18.02	18.02	18.02					
20	Compress. Fact.	@ T,P (-)	1.00	1.00	1.00	1.00					
21	Viscosity	@ T,P (cP)	0.01	0.01	0.01	0.01					
22	C_P / C_V	@ T,P	1.30	1.30	1.30	1.30					
23	M/B Flow Rate	(kg/h)	360	360	360	360					
24	Excess Ratio	(-)	1.10	1.10	1.10	1.10					
25	Flow Rate	(kg/h)	396	396	396	396					
26	**Line Length**	(m)	**100**	**100**	**100**	**100**					
27	**Pipe Nominal Size**	(inch)	**2**	**2**	**2**	**2**					
28		**Calculation Result**	**OK**	**OK**	**OK**	**OK**					
29	Inlet Press.	(Input) (kg/cm^2G)	3.50	3.50	3.50	3.50					
30	Inlet Press.	(Calcul'd) (kg/cm^2G)	**3.50**	**3.50**	**3.50**	**3.50**					
31	Velocity	@ Inlet (m/sec)	25.94	25.94	25.94	25.94					
32	Reynolds No.	@ Inlet (-)	284377.71	284377.71	284377.71	284377.71					
33	d*V*V/2g	@ Inlet (kg/cm^2)	76.37	76.37	76.37	76.37					
34	4*F*L/D	@ Inlet (-)	41.36	41.36	41.36	41.36					
35	dP/100m	@ Inlet (kg/cm^2)	0.32	0.32	0.32	0.32					
36	Outlet Press.	(Input) (kg/cm^2G)									
37	Outlet Press.	(Calcul'd) (kg/cm^2G)	**3.17**	**3.17**	**3.17**	**3.17**					
38	**Velocity**	**@ Outlet (m/sec)**	**27.97**	**27.97**	**27.97**	**27.97**					
39		Limit	76.20	76.20	76.20	76.20					
40	Sonic Velocity	@ Outlet (m/sec)	509.56	509.56	509.56	509.56					
41	Mach No.	@ Outlet (-)	0.05	0.05	0.05	0.05					
42	Reynolds No.	@ Outlet (-)	284377.71	284377.71	284377.71	284377.71					
43	d*V*V/2g	@ Outlet (kg/cm^2)	82.35	82.35	82.35	82.35					
44	4*F*L/D	@ Outlet (-)	41.36	41.36	41.36	41.36					
45	**dP/100m**	**@ Outlet (kg/cm^2)**	**0.341**	**0.341**	**0.341**	**0.341**					
46		Limit									
47	**Straight Pipe dP**	(kg/cm^2)	**0.329**	**0.329**	**0.329**	**0.329**					
48	dP of Control Valve	(kg/cm^2)									
49	dP of Heat Exchanger	(kg/cm^2)									
50	dP of Column	(kg/cm^2)									
51	dP of Strainer	(kg/cm^2)									
52	dP of Orifice	(kg/cm^2)									
53	Other dP	(kg/cm^2)									
54	Static Head	(m)									
55		(kg/cm^2)									
56	**Equip dP**	(kg/cm^2)									
57	Pipe Entrance										
58	Pipe Exit										
59	90 Elbow										
60	Tee										
61	Globe Valve										
62	Gate Valve										
63	Check Valve										
64	Butterfly Valve										
65	Ball valve										
66	Contraction										
67	Enlargement										
68	Other's K										
69	**Sum (Ki)**										
70	**Fitting dP**	(kg/cm^2)									
71	**Total dP**	(kg/cm^2)	**0.329**	**0.329**	**0.329**	**0.329**					
72	**Remarks**										
73											
74			**FLOWRATE IS ASSUMED.**	**FLOWRATE IS ASSUMED.**	**FLOWRATE IS ASSUMED.**	**FLOWRATE IS ASSUMED.**					
75											
76											
77											

PT LOTTE CHEMICAL INDONESIA

LINE HYDRAULIC CALCULATION SHEET (LINE WP5)

LOTTE E&C

1	PROJECT :	LINE PROJECT			JOB NO. :	15005				REVISION
2	CLIENT :	PT LOTTE CHEMICAL INDONESIA			DOCU. NO. :	LINE-900-BC-4-0001				
3	LOCATION :	CILEGON, INDONESIA			P&ID NO. :	REFER TO ROW NO. 10				
4	UNIT :	**WP5**			CASE :	DESIGN				
5	SERVICE :	**3.8.2 STEAM, STEAM CONDENSATE**			SHEET :	10 OF 23 (UTILITY)				
6	**Item**		**LS SUB HDR**			**LSC SUB HDR**				
7	Line No		LS-2301	LS-3301	LS-4301	LSC-2301	LSC-3301	LSC-4301		
8		**From**	**LS-0014**	**LS-0011**	**LS-0025**	**USER**	**USER**	**USER**		
9		**To**	**USER**	**USER**	**USER**	**LSC-0006**	**LSC-0005**	**LSC-0009**		
10		P&ID No.	904-0105	904-0105	904-0105	904-0106	904-0106	904-0106		
11		Piping Material Class	1C1S	1C1S	1C1S	1C1W	1C1W	1C1W		
12		Pipe Schedule	STD	40	40	40	40	40		
13		Pipe Roughness (mm)	0.046	0.046	0.046	0.046	0.046	0.046		
14		**Fluid**	**LP STEAM**	**LP STEAM**	**LP STEAM**	**LP COND.**	**LP COND.**	**LP COND.**		
15	Calc Mode (L, Vu, Vd)		Vu	Vu	Vu	L	L	L		
16	Temperature	: T (C)	160.0	160.0	160.0	140.0	140.0	140.0		
17	Pressure	: P (kg/cm^2G)	3.50	3.50	3.50	2.65	2.65	2.65		
18	Density	@ T,P (kg/m^3)				925.9	925.9	925.9		
19	Molecular	@ T,P (-)	18.02	18.02	18.02					
20	Compress. Fact.	@ T,P (-)	1.00	1.00	1.00					
21	Viscosity	@ T,P (cP)	0.01	0.01	0.01	0.20	0.20	0.20		
22	C_P / C_V	@ T,P	1.30	1.30	1.30					
23	M/B Flow Rate	(kg/h)	27,661	2,617	186	32,841	5,051	186		
24	Excess Ratio	(-)	1.10	1.10	1.10	1.10	1.10	1.10		
25	Flow Rate	(kg/h)	30,427	2,879	205	36,125	5,556	205		
26	**Line Length**	(m)	**100**	**100**	**100**	**100**	**100**	**100**		
27	**Pipe Nominal Size**	(inch)	**16**	**6**	**3**	**10**	**3**	**2**		
28		**Calculation Result**	**OK**	**OK**	**OK**	**OK**	**OK**	**OK**		
29	Inlet Press.	(Input) (kg/cm^2G)	3.50	3.50	3.50	2.65	2.65	2.65		
30	Inlet Press.	(Calcul'd) (kg/cm^2G)	**3.50**	**3.50**	**3.50**	**2.65**	**2.65**	**2.65**		
31	Velocity	@ Inlet (m/sec)	32.22	19.27	5.36	0.21	0.35	0.03		
32	Reynolds No.	@ Inlet (-)	2778200.62	660908.45	92955.33	257440.10	129311.57	7075.95		
33	d*V*V/2g	@ Inlet (kg/cm^2)	117.84	42.16	3.26	2.14	5.77	0.04		
34	4*F*L/D	@ Inlet (-)	3.34	10.37	26.80	6.45	25.78	66.80		
35	dP/100m	@ Inlet (kg/cm^2)	0.04	0.04	0.01	0.00	0.01	0.00		
36	Outlet Press.	(Input) (kg/cm^2G)								
37	Outlet Press.	(Calcul'd) (kg/cm^2G)	**3.46**	**3.46**	**3.49**	**2.65**	**2.64**	**2.65**		
38	**Velocity**	**@ Outlet (m/sec)**	**32.51**	**19.46**	**5.37**	**0.21**	**0.35**	**0.03**		
39		Limit	76.20	76.20	76.20	0.30	2.40	0.30		
40	Sonic Velocity	@ Outlet (m/sec)	509.56	509.56	509.56					
41	Mach No.	@ Outlet (-)	0.06	0.04	0.01					
42	Reynolds No.	@ Outlet (-)	2778200.62	660908.45	92955.33	257440.10	129311.57	7075.95		
43	d*V*V/2g	@ Outlet (kg/cm^2)	118.88	42.58	3.27	2.14	5.77	0.04		
44	4*F*L/D	@ Outlet (-)	3.34	10.37	26.80	6.45	25.78	66.80		
45	**dP/100m**	**@ Outlet (kg/cm^2)**	**0.040**	**0.044**	**0.009**	**0.001**	**0.015**	**0.000**		
46		Limit	0.060	0.060	0.060					
47	**Straight Pipe dP**	(kg/cm^2)	**0.040**	**0.044**	**0.009**	**0.001**	**0.015**	**0.000**		
48	dP of Control Valve	(kg/cm^2)								
49	dP of Heat Exchanger	(kg/cm^2)								
50	dP of Column	(kg/cm^2)								
51	dP of Strainer	(kg/cm^2)								
52	dP of Orifice	(kg/cm^2)								
53	Other dP	(kg/cm^2)								
54	Static Head	(m)								
55		(kg/cm^2)								
56	**Equip dP**	(kg/cm^2)								
57	Pipe Entrance									
58	Pipe Exit									
59	90 Elbow									
60	Tee									
61	Globe Valve									
62	Gate Valve									
63	Check Valve									
64	Butterfly Valve									
65	Ball valve									
66	Contraction									
67	Enlargement									
68	Other's K									
69	**Sum (Ki)**									
70	**Fitting dP**	(kg/cm^2)								
71	**Total dP**	(kg/cm^2)	**0.040**	**0.044**	**0.009**	**0.001**	**0.015**	**0.000**		
72	**Remarks**									
73										
74										
75										
76										
77										

PT LOTTE CHEMICAL INDONESIA

LINE HYDRAULIC CALCULATION SHEET (LINE WP5)

LOTTE E&C

1	PROJECT :	LINE PROJECT				JOB NO. :	15005				REVISION
2	CLIENT :	PT LOTTE CHEMICAL INDONESIA				DOCU. NO. :	LINE-900-BC-4-0001				
3	LOCATION :	CILEGON, INDONESIA				P&ID NO. :	REFER TO ROW NO. 10				
4	UNIT :	**WP5**				CASE :	DESIGN				
5	SERVICE :	**3.8.3 INSTRUMENT AIR**				SHEET :	11 OF 23 (UTILITY)				
6	**Item**		**C-201A/B**	**C-203A/B**	**C-205A/B**	**C-208A/B**	**W-202**	**W-201**	**SUB HDR**		
7	Line No		IA-2001 / 2011	IA-2002 / 2012	IA-2003 / 2013	IA-2004 / 2014	IA-2005	IA-2006	IA-2301		
8		**From**	**IA HDR**	**IA HDR**	**IA HDR**	**IA HDR**	**IA HDR**	**IA HDR**	**IA-0016**		
9		**To**	**C-201A/B**	**C-203A/B**	**C-205A/B**	**C-208A/B**	**W-202**	**W-201**	**USER**		
10		P&ID No.	902-0003	902-0006	902-0010	902-0014	902-0016	902-0017	904-0107		
11		Piping Material Class	1S0D	1S0D	1S0D	1S0D	1S0D	1S0D	1S0D		
12		Pipe Schedule	40S	40S	40S	40S	40S	10S	10S		
13		Pipe Roughness (mm)	0.015	0.015	0.015	0.015	0.015	0.015	0.015		
14		**Fluid**	**IA**	**IA**	**IA**	**IA**	**IA**	**IA**	**IA**		
15	Calc Mode (L, Vu, Vd)		Vu	Vu	Vu	Vu	Vu	Vu	Vu		
16	Temperature	: T (C)	25.0	25.0	25.0	25.0	25.0	25.0	25.0		
17	Pressure	: P (kg/cm^2G)	7.00	7.00	7.00	7.00	7.00	7.00	7.00		
18	Density	@ T,P (kg/m^3)									
19	Molecular	@ T,P (-)	28.85	28.85	28.85	28.85	28.85	28.85	28.85		
20	Compress. Fact.	@ T,P (-)	1.00	1.00	1.00	1.00	1.00	1.00	1.00		
21	Viscosity	@ T,P (cP)	0.02	0.02	0.02	0.02	0.02	0.02	0.02		
22	C_P / C_V	@ T,P	1.40	1.40	1.40	1.40	1.40	1.40	1.40		
23	M/B Flow Rate	(kg/h)	10.3	10.3	15.5	10.3	2	522	46		
24	Excess Ratio	(-)	1.00	1.00	1.00	1.00	1.00	1.00	1.00		
25	Flow Rate	(kg/h)	10	10	15	10	2	522	46		
26	**Line Length**	(m)	**100**	**100**	**100**	**100**	**100**	**100**	**100**		
27	**Pipe Nominal Size**	(inch)	**1**	**1**	**1**	**1**	**1**	**2**	**2**		
28		**Calculation Result**	**OK**	**OK**	**OK**	**OK**	**OK**	**OK**	**OK**		
29	Inlet Press.	(Input) (kg/cm^2G)	7.00	7.00	7.00	7.00	7.00	7.00	7.00		
30	Inlet Press.	(Calcul'd) (kg/cm^2G)	**7.00**	**7.00**	**7.00**	**7.00**	**7.00**	**7.00**	**7.00**		
31	Velocity	@ Inlet (m/sec)	0.56	0.56	0.84	0.56	0.08	6.70	0.60		
32	Reynolds No.	@ Inlet (-)	7599.55	7599.55	11399.32	7599.55	1139.93	187062.02	16627.74		
33	d*V*V/2g	@ Inlet (kg/cm^2)	0.15	0.15	0.33	0.15	0.00	20.99	0.17		
34	4*F*L/D	@ Inlet (-)	127.77	127.77	115.52	127.77	210.75	32.33	50.48		
35	dP/100m	@ Inlet (kg/cm^2)	0.00	0.00	0.00	0.00	0.00	0.07	0.00		
36	Outlet Press.	(Input) (kg/cm^2G)									
37	Outlet Press.	(Calcul'd) (kg/cm^2G)	**7.00**	**7.00**	**7.00**	**7.00**	**7.00**	**6.93**	**7.00**		
38	**Velocity**	**@ Outlet (m/sec)**	**0.56**	**0.56**	**0.84**	**0.56**	**0.08**	**6.76**	**0.60**		
39		Limit	60.96	60.96	60.96	60.96	60.96	60.96	60.96		
40	Sonic Velocity	@ Outlet (m/sec)	346.73	346.73	346.73	346.73	346.73	346.73	346.73		
41	Mach No.	@ Outlet (-)	0.00	0.00	0.00	0.00	0.00	0.02	0.00		
42	Reynolds No.	@ Outlet (-)	7599.55	7599.55	11399.32	7599.55	1139.93	187062.02	16627.74		
43	d*V*V/2g	@ Outlet (kg/cm^2)	0.15	0.15	0.33	0.15	0.00	21.17	0.17		
44	4*F*L/D	@ Outlet (-)	127.77	127.77	115.52	127.77	210.75	32.33	50.48		
45	**dP/100m**	**@ Outlet (kg/cm^2)**	**0.002**	**0.002**	**0.004**	**0.002**	**0.000**	**0.068**	**0.001**		
46		Limit	0.070	0.070	0.070	0.070	0.070	0.070	0.070		
47	**Straight Pipe dP**	(kg/cm^2)	**0.002**	**0.002**	**0.004**	**0.002**	**0.000**	**0.068**	**0.001**		
48	dP of Control Valve	(kg/cm^2)									
49	dP of Heat Exchanger	(kg/cm^2)									
50	dP of Column	(kg/cm^2)									
51	dP of Strainer	(kg/cm^2)									
52	dP of Orifice	(kg/cm^2)									
53	Other dP	(kg/cm^2)									
54	Static Head	(m)									
55		(kg/cm^2)									
56	**Equip dP**	(kg/cm^2)									
57	Pipe Entrance										
58	Pipe Exit										
59	90 Elbow										
60	Tee										
61	Globe Valve										
62	Gate Valve										
63	Check Valve										
64	Butterfly Valve										
65	Ball valve										
66	Contraction										
67	Enlargement										
68	Other's K										
69	**Sum (Ki)**										
70	**Fitting dP**	(kg/cm^2)									
71	**Total dP**	(kg/cm^2)	**0.002**	**0.002**	**0.004**	**0.002**	**0.000**	**0.068**	**0.001**		
72	**Remarks**										
73											
74			FLOWRATE BY VENDOR	FLOWRATE BY VENDOR	FLOWRATE BY VENDOR	FLOWRATE BY VENDOR	FLOWRATE BY VENDOR	FLOWRATE BY VENDOR	SUBHEADER FOR COMPRESSORS		
75											
76											
77											

PT LOTTE CHEMICAL INDONESIA

LINE HYDRAULIC CALCULATION SHEET (LINE WP5)

LOTTE E&C

1	PROJECT :	LINE PROJECT	JOB NO. :	15005
2	CLIENT :	PT LOTTE CHEMICAL INDONESIA	DOCU. NO. :	LINE-900-BC-4-0001
3	LOCATION :	CILEGON, INDONESIA	P&ID NO. :	REFER TO ROW NO. 10
4	UNIT :	**WP5**	CASE :	DESIGN
5	SERVICE :	**3.8.4 NITROGEN**	SHEET :	12 OF 23 (UTILITY)

REVISION

	Item			TK-201		TK-201 ATM VENT LINE		C-201A/B	D-201 DRAIN		
7	Line No			N-2001	N-2011	N-2021	N-2022	N-2002 / 2012	N-2007		
8		**From**		**N2 HDR**	**PCV-2001**	**N2 HDR**	**RO-2003**	**N2 HDR**	**N2 HDR**		
9		**To**		**PCV-2001**	**TK-201**	**RO-2003**	**AV-2014**	**C-201A/B**	**D-201 DRAIN**		
10		P&ID No.		902-0001	902-0001	902-0001	902-0001	902-0003	902-0003		
11		Piping Material Class		1C1D	1L1P	1C1D	1L1P	1C1D	1C1D		
12		Pipe Schedule		40	40	40	40	80	80		
13		Pipe Roughness (mm)		0.046	0.046	0.046	0.046	0.046	0.046		
14		**Fluid**		**N2**	**N2**	**N2**	**N2**	**N2**	**N2**		
15	Calc Mode (L, Vu, Vd)			Vu	Vd	Vu	Vd	Vu	Vu		
16	Temperature	: T	(C)	25.0	25.0	25.0	25.0	25.0	25.0		
17	Pressure	: P	(kg/cm^2G)	7.00	0.00	7.00	0.00	7.00	7.00		
18	Density	@ T,P	(kg/m^3)								
19	Molecular	@ T,P	(-)	28.00	28.00	28.00	28.00	28.00	28.00		
20	Compress. Fact.	@ T,P	(-)	1.00	1.00	1.00	1.00	1.00	1.00		
21	Viscosity	@ T,P	(cP)	0.02	0.02	0.02	0.02	0.02	0.02		
22	C_P / C_V	@ T,P		1.40	1.40	1.40	1.40	1.40	1.40		
23	M/B Flow Rate		(kg/h)	2415	2,415	500	500	15	3		
24	Excess Ratio		(-)	1.10	1.10	1.10	1.10	1.00	1.10		
25	Flow Rate		(kg/h)	2,657	2,657	550	550	15	3		
26	**Line Length**		(m)	**100**	**100**	**100**	**100**	**100**	**100**		
27	**Pipe Nominal Size**		(inch)	**6**	**8**	**3**	**4**	**1**	**1**		
28		**Calculation Result**		**OK**	**OK**	**OK**	**OK**	**OK**	**OK**		
29	Inlet Press.	(Input)	(kg/cm^2G)	7.00		7.00		7.00	7.00		
30	Inlet Press.	(Calcul'd)	(kg/cm^2G)	**7.00**	**0.02**	**7.00**	**0.03**	**7.00**	**7.00**		
31	Velocity	@ Inlet	(m/sec)	4.44	19.56	3.59	15.76	1.01	0.22		
32	Reynolds No.	@ Inlet	(-)	338830.28	257482.26	138673.06	105679.56	10911.46	2356.71		
33	d*V*V/2g	@ Inlet	(kg/cm^2)	8.96	22.80	5.86	14.95	0.46	0.02		
34	4*F*L/D	@ Inlet	(-)	10.89	8.26	25.59	19.53	136.03	199.50		
35	dP/100m	@ Inlet	(kg/cm^2)	0.01	0.02	0.02	0.03	0.01	0.00		
36	Outlet Press.	(Input)	(kg/cm^2G)		0.00		0.00				
37	Outlet Press.	(Calcul'd)	(kg/cm^2G)	**6.79**		**6.98**		**6.99**	**7.00**		
38	**Velocity**	**@ Outlet**	**(m/sec)**	**4.56**	**19.92**	**3.60**	**16.21**	**1.01**	**0.22**		
39			Limit	60.96	60.96	60.96	60.96	60.96	60.96		
40	Sonic Velocity	@ Outlet	(m/sec)	351.60	351.60	351.60	351.60	351.95	351.95		
41	Mach No.	@ Outlet	(-)	0.01	0.06	0.01	0.05	0.00	0.00		
42	Reynolds No.	@ Outlet	(-)	338830.28	257482.26	138673.06	105679.56	10911.46	2356.71		
43	d*V*V/2g	@ Outlet	(kg/cm^2)	9.20	23.22	5.87	15.38	0.46	0.02		
44	4*F*L/D	@ Outlet	(-)	10.89	8.26	25.59	19.53	136.03	199.50		
45	**dP/100m**	**@ Outlet**	**(kg/cm^2)**	**0.010**	**0.019**	**0.015**	**0.030**	**0.006**	**0.000**		
46			Limit	N/A	N/A	N/A	N/A	N/A	N/A		
47	**Straight Pipe dP**		(kg/cm^2)	**0.010**	**0.019**	**0.015**	**0.030**	**0.006**	**0.000**		
48	dP of Control Valve		(kg/cm^2)								
49	dP of Heat Exchanger		(kg/cm^2)								
50	dP of Column		(kg/cm^2)								
51	dP of Strainer		(kg/cm^2)								
52	dP of Orifice		(kg/cm^2)	0.2							
53	Other dP		(kg/cm^2)								
54	Static Head		(m)								
55			(kg/cm^2)								
56	**Equip dP**		(kg/cm^2)	**0.200**							
57	Pipe Entrance										
58	Pipe Exit										
59	90 Elbow										
60	Tee										
61	Globe Valve										
62	Gate Valve										
63	Check Valve										
64	Butterfly Valve										
65	Ball valve										
66	Contraction										
67	Enlargement										
68	Other's K										
69	**Sum (Ki)**										
70	**Fitting dP**		(kg/cm^2)								
71	**Total dP**		(kg/cm^2)	**0.210**	**0.019**	**0.015**	**0.030**	**0.006**	**0.000**		
72	**Remarks**										
73											
74								FLOWRATE BY VENDOR	FLOWRATE IS ASSUED		
75											
76											
77											

PT LOTTE CHEMICAL INDONESIA

LINE HYDRAULIC CALCULATION SHEET (LINE WP5)

LOTTE E&C

1	PROJECT :	LINE PROJECT				JOB NO. :	15005				REVISION
2	CLIENT :	PT LOTTE CHEMICAL INDONESIA				DOCU. NO. :	LINE-900-BC-4-0001				
3	LOCATION :	CILEGON, INDONESIA				P&ID NO. :	REFER TO ROW NO. 10				
4	UNIT :	**WP5**				CASE :	DESIGN				
5	SERVICE :	**3.8.4 NITROGEN**				SHEET :	13 OF 23 (UTILITY)				
6	**Item**		**TK-203**		**TK-203 ATM VENT LINE**		**C-203A/B**	**D-203 DRAIN**			
7	Line No		N-2003	N-2013	N-2023	N-2024	N-2004 / 2014	N-2008			
8		**From**	**N2 HDR**	**PCV-2002**	**N2 HDR**	**RO-2004**	**N2 HDR**	**N2 HDR**			
9		**To**	**PCV-2002**	**TK-203**	**RO-2004**	**AV-2034**	**C-203A/B**	**D-203 DRAIN**			
10		P&ID No.	902-0005	902-0005	902-0005	902-0005	902-0006	902-0006			
11		Piping Material Class	1C1D	1L1P	1C1D	1L1P	1C1D	1C1D			
12		Pipe Schedule	40	40	40	40	80	80			
13		Pipe Roughness (mm)	0.046	0.046	0.046	0.046	0.046	0.046			
14		**Fluid**	**N2**	**N2**	**N2**	**N2**	**N2**	**N2**			
15	Calc Mode (L, Vu, Vd)		Vu	Vd	Vu	Vd	Vu	Vu			
16	Temperature	: T (C)	25.0	25.0	25.0	25.0	25.0	25.0			
17	Pressure	: P (kg/cm^2G)	7.00	0.00	7.00	0.00	7.00	7.00			
18	Density	@ T,P (kg/m^3)									
19	Molecular	@ T,P (-)	28.00	28.00	28.00	28.00	28.00	28.00			
20	Compress. Fact.	@ T,P (-)	1.00	1.00	1.00	1.00	1.00	1.00			
21	Viscosity	@ T,P (cP)	0.02	0.02	0.02	0.02	0.02	0.02			
22	C_P / C_V	@ T,P	1.40	1.40	1.40	1.40	1.40	1.40			
23	M/B Flow Rate	(kg/h)	2,242	2,242	500	500	15	3			
24	Excess Ratio	(-)	1.10	1.10	1.10	1.10	1.00	1.10			
25	Flow Rate	(kg/h)	2,466	2,466	550	550	15	3			
26	**Line Length**	(m)	**100**	**100**	**100**	**100**	**100**	**100**			
27	**Pipe Nominal Size**	(inch)	**4**	**8**	**3**	**4**	**1**	**1**			
28		**Calculation Result**	**OK**	**OK**	**OK**	**OK**	**OK**	**OK**			
29	Inlet Press.	(Input) (kg/cm^2G)	7.00		7.00		7.00	7.00			
30	Inlet Press.	(Calcul'd) (kg/cm^2G)	**7.00**	**0.02**	**7.00**	**0.03**	**7.00**	**7.00**			
31	Velocity	@ Inlet (m/sec)	9.35	18.19	3.59	15.76	1.01	0.22			
32	Reynolds No.	@ Inlet (-)	473867.15	239037.37	138673.06	105679.56	12123.85	2356.71			
33	d*V*V/2g	@ Inlet (kg/cm^2)	39.76	19.68	5.86	14.95	0.46	0.02			
34	4*F*L/D	@ Inlet (-)	17.01	8.33	25.59	19.53	133.20	199.50			
35	dP/100m	@ Inlet (kg/cm^2)	0.07	0.02	0.02	0.03	0.01	0.00			
36	Outlet Press.	(Input) (kg/cm^2G)		0.00		0.00					
37	Outlet Press.	(Calcul'd) (kg/cm^2G)	**6.73**	**0.00**	**6.98**		**6.99**	**7.00**			
38	**Velocity**	**@ Outlet (m/sec)**	**9.67**	**18.48**	**3.60**	**16.21**	**1.01**	**0.22**			
39		Limit	60.96	60.96	60.96	60.96	60.96	60.96			
40	Sonic Velocity	@ Outlet (m/sec)	351.60	351.60	351.60	351.60	351.60	351.95			
41	Mach No.	@ Outlet (-)	0.03	0.05	0.01	0.05	0.00	0.00			
42	Reynolds No.	@ Outlet (-)	473867.15	239037.37	138673.06	105679.56	12123.85	2356.71			
43	d*V*V/2g	@ Outlet (kg/cm^2)	41.14	20.00	5.87	15.38	0.46	0.02			
44	4*F*L/D	@ Outlet (-)	17.01	8.33	25.59	19.53	133.20	199.50			
45	**dP/100m**	**@ Outlet (kg/cm^2)**	**0.070**	**0.017**	**0.015**	**0.030**	**0.006**	**0.000**			
46		Limit	N/A	N/A	N/A	N/A	N/A	N/A			
47	**Straight Pipe dP**	(kg/cm^2)	**0.069**	**0.017**	**0.015**	**0.030**	**0.006**	**0.000**			
48	dP of Control Valve	(kg/cm^2)									
49	dP of Heat Exchanger	(kg/cm^2)									
50	dP of Column	(kg/cm^2)									
51	dP of Strainer	(kg/cm^2)									
52	dP of Orifice	(kg/cm^2)	0.2								
53	Other dP	(kg/cm^2)									
54	Static Head	(m)									
55		(kg/cm^2)									
56	**Equip dP**	(kg/cm^2)	**0.200**								
57	Pipe Entrance										
58	Pipe Exit										
59	90 Elbow										
60	Tee										
61	Globe Valve										
62	Gate Valve										
63	Check Valve										
64	Butterfly Valve										
65	Ball valve										
66	Contraction										
67	Enlargement										
68	Other's K										
69	**Sum (Ki)**										
70	**Fitting dP**	(kg/cm^2)									
71	**Total dP**	(kg/cm^2)	**0.269**	**0.017**	**0.015**	**0.030**	**0.006**	**0.000**			
72	**Remarks**										
73											
74							FLOWRATE BY VENDOR	FLOWRATE IS ASSUED			
75											
76											
77											

PT LOTTE CHEMICAL INDONESIA

LINE HYDRAULIC CALCULATION SHEET (LINE WP5)

LOTTE E&C

1	PROJECT :	LINE PROJECT			JOB NO. :	15005					REVISION
2	CLIENT :	PT LOTTE CHEMICAL INDONESIA			DOCU. NO. :	LINE-900-BC-4-0001					
3	LOCATION :	CILEGON, INDONESIA			P&ID NO. :	REFER TO ROW NO. 10					
4	UNIT :	**WP5**			CASE :	DESIGN					
5	SERVICE :	**3.8.4 NITROGEN**			SHEET :	14 OF 23 (UTILITY)					
6	**Item**		**TK-205 ATM VENT LINE**		**C-205A/B**	**D-205 DRAIN**	**TK-208 ATM VENT LINE**		**C-208A/B**	**D-208 DRAIN**	
7	Line No		N-2025	N-2026	N-2005 / 2015	N-2009	N-2021	N-2022	N-2006 / 2016	N-2010	
8		**From**	**N2 HDR**	**RO-2005**	**N2 HDR**	**N2 HDR**	**N2 HDR**	**-**	**N2 HDR**	**N2 HDR**	
9		**To**	**RO-2005**	**AV-2054**	**C-205A/B**	**D-205 DRAIN**	**-**	**AV-2084**	**C-208A/B**	**D-208 DRAIN**	
10		P&ID No.	902-0008	902-0008	902-0010	902-0010	902-0012	902-0012	902-0014	902-0014	
11		Piping Material Class	1C1D	1S0Y	1C1D	1C1D	1C1D	1L1P	1C1D	1C1D	
12		Pipe Schedule	40	10S	80	80	40	40	80	80	
13		Pipe Roughness (mm)	0.046	0.015	0.046	0.046	0.046	0.046	0.046	0.046	
14		**Fluid**	**N2**	**N2**	**N2**	**N2**	**N2**	**N2**	**N2**	**N2**	
15	Calc Mode (L, Vu, Vd)		Vu	Vd	Vu	Vu	Vu	Vd	Vu	Vu	
16	Temperature	: T (C)	25.0	25.0	25.0	25.0	25.0	25.0	25.0	25.0	
17	Pressure	: P (kg/cm^2G)	7.00	0.00	7.00	7.00	7.00	0.00	7.00	7.00	
18	Density	@ T,P (kg/m^3)									
19	Molecular	@ T,P (-)	28.00	28.00	28.00	28.00	28.00	28.00	28.00	28.00	
20	Compress. Fact.	@ T,P (-)	1.00	1.00	1.00	1.00	1.00	1.00	1.00	1.00	
21	Viscosity	@ T,P (cP)	0.02	0.02	0.02	0.02	0.02	0.02	0.02	0.02	
22	C_P / C_V	@ T,P	1.40	1.40	1.40	1.40	1.40	1.40	1.40	1.40	
23	M/B Flow Rate	(kg/h)	500	500	23	3	500	500	15	3	
24	Excess Ratio	(-)	1.10	1.10	1.00	1.10	1.10	1.10	1.00	1.10	
25	Flow Rate	(kg/h)	550	550	23	3	550	550	15	3	
26	**Line Length**	(m)	**100**	**100**	**100**	**100**	**100**	**100**	**100**	**100**	
27	**Pipe Nominal Size**	(inch)	**3**	**4**	**1**	**1**	**3**	**4**	**1**	**1**	
28		**Calculation Result**	**OK**	**OK**	**OK**	**OK**	**OK**	**OK**	**OK**	**OK**	
29	Inlet Press.	(Input) (kg/cm^2G)	7.00		7.00	7.00	7.00		7.00	7.00	
30	Inlet Press.	(Calcul'd) (kg/cm^2G)	**7.00**	**0.02**	**7.00**	**7.00**	**7.00**	**0.03**	**7.00**	**7.00**	
31	Velocity	@ Inlet (m/sec)	3.59	14.19	1.51	0.22	3.59	15.76	1.01	0.22	
32	Reynolds No.	@ Inlet (-)	138673.06	99877.93	18185.77	2356.71	138673.06	105679.56	12123.85	2356.71	
33	d*V*V/2g	@ Inlet (kg/cm^2)	5.86	12.02	1.04	0.02	5.86	14.95	0.46	0.02	
34	4*F*L/D	@ Inlet (-)	25.59	17.30	123.72	199.50	25.59	19.53	133.20	199.50	
35	dP/100m	@ Inlet (kg/cm^2)	0.02	0.02	0.01	0.00	0.02	0.03	0.01	0.00	
36	Outlet Press.	(Input) (kg/cm^2G)		0.00				0.00			
37	Outlet Press.	(Calcul'd) (kg/cm^2G)	**6.98**		**6.99**	**7.00**	**6.98**		**6.99**	**7.00**	
38	**Velocity**	**@ Outlet (m/sec)**	**3.60**	**14.48**	**1.51**	**0.22**	**3.60**	**16.21**	**1.01**	**0.22**	
39		Limit	60.96	60.96	60.96	60.96	60.96	60.96	60.96	60.96	
40	Sonic Velocity	@ Outlet (m/sec)	351.60	351.60	351.60	351.95	351.60	351.60	351.60	351.95	
41	Mach No.	@ Outlet (-)	0.01	0.04	0.00	0.00	0.01	0.05	0.00	0.00	
42	Reynolds No.	@ Outlet (-)	138673.06	99877.93	18185.77	2356.71	138673.06	105679.56	12123.85	2356.71	
43	d*V*V/2g	@ Outlet (kg/cm^2)	5.87	12.27	1.04	0.02	5.87	15.38	0.46	0.02	
44	4*F*L/D	@ Outlet (-)	25.59	17.30	123.72	199.50	25.59	19.53	133.20	199.50	
45	**dP/100m**	**@ Outlet (kg/cm^2)**	**0.015**	**0.021**	**0.013**	**0.000**	**0.015**	**0.030**	**0.006**	**0.000**	
46		Limit	N/A	N/A	N/A	N/A	N/A	N/A	N/A	N/A	
47	**Straight Pipe dP**	(kg/cm^2)	**0.015**	**0.021**	**0.013**	**0.000**	**0.015**	**0.030**	**0.006**	**0.000**	
48	dP of Control Valve	(kg/cm^2)									
49	dP of Heat Exchanger	(kg/cm^2)									
50	dP of Column	(kg/cm^2)									
51	dP of Strainer	(kg/cm^2)									
52	dP of Orifice	(kg/cm^2)									
53	Other dP	(kg/cm^2)									
54	Static Head	(m)									
55		(kg/cm^2)									
56	**Equip dP**	(kg/cm^2)									
57	Pipe Entrance										
58	Pipe Exit										
59	90 Elbow										
60	Tee										
61	Globe Valve										
62	Gate Valve										
63	Check Valve										
64	Butterfly Valve										
65	Ball valve										
66	Contraction										
67	Enlargement										
68	Other's K										
69	**Sum (Ki)**										
70	**Fitting dP**	(kg/cm^2)									
71	**Total dP**	(kg/cm^2)	**0.015**	**0.021**	**0.013**	**0.000**	**0.015**	**0.030**	**0.006**	**0.000**	
72	**Remarks**										
73											
74					**FLOWRATE BY VENDOR**	**FLOWRATE IS ASSUED**		**FLOWRATE BY VENDOR**		**FLOWRATE IS ASSUED**	
75											
76											
77											

PT LOTTE CHEMICAL INDONESIA

LINE HYDRAULIC CALCULATION SHEET (LINE WP5)

LOTTE E&C

1	PROJECT :	LINE PROJECT	JOB NO. :	15005
2	CLIENT :	PT LOTTE CHEMICAL INDONESIA	DOCU. NO. :	LINE-900-BC-4-0001
3	LOCATION :	CILEGON, INDONESIA	P&ID NO. :	REFER TO ROW NO. 10
4	UNIT :	**WP5**	CASE :	DESIGN
5	SERVICE :	**3.8.4 NITROGEN**	SHEET :	15 OF 23 (UTILITY)

REVISION

6	**Item**		**FLARE HEADER PURGE**							
7	Line No		N-2200	N-2210	N-3000	N-3001	N-3002	N-3003	N-3004	N-3005
8		**From**	**N2 HDR**	**N2 HDR**	**N2 HDR**	**N2 HDR**	**N2 HDR**	**N2 HDR**	**N2 HDR**	**N2 HDR**
9		**To**	**LP FL HDR (DWT)**	**HP FL HDR (DWT)**	**HP FL HDR (SPT)**	**LP FL HDR (SPT)**	**HP FL HDR (SPT)**	**HP FL HDR (SPT)**	**HP FL HDR (SPT)**	**HP FL HDR (SPT)**
10		P&ID No.	902-0100	902-0100	903-0100	903-0100	903-0100	903-0100	903-0100	903-0100
11		Piping Material Class	1C1D	1C1D	1C1D	1C1D	1C1D	1C1D	1C1D	1C1D
12		Pipe Schedule	80	80	80	80	80	80	80	80
13		Pipe Roughness (mm)	0.046	0.046	0.046	0.046	0.046	0.046	0.046	0.046
14		**Fluid**	**N2**	**N2**	**N2**	**N2**	**N2**	**N2**	**N2**	**N2**
15	Calc Mode (L, Vu, Vd)		Vu	Vu	Vu	Vu	Vu	Vu	Vu	Vu
16	Temperature	: T (C)	25.0	25.0	25.0	25.0	25.0	25.0	25.0	25.0
17	Pressure	: P (kg/cm^2G)	7.00	7.00	7.00	7.00	7.00	7.00	7.00	7.00
18	Density	@ T,P (kg/m^3)								
19	Molecular	@ T,P (-)	28.00	28.00	28.00	28.00	28.00	28.00	28.00	28.00
20	Compress. Fact.	@ T,P (-)	1.00	1.00	1.00	1.00	1.00	1.00	1.00	1.00
21	Viscosity	@ T,P (cP)	0.02	0.02	0.02	0.02	0.02	0.02	0.02	0.02
22	C_P / C_V	@ T,P	1.40	1.40	1.40	1.40	1.40	1.40	1.40	1.40
23	M/B Flow Rate	(kg/h)	30	5	20	11	30	20	20	20
24	Excess Ratio	(-)	1.10	1.10	1.10	1.10	1.10	1.10	1.10	1.10
25	Flow Rate	(kg/h)	33	6	22	12	33	22	22	22
26	**Line Length**	(m)	**100**	**100**	**100**	**100**	**100**	**100**	**100**	**100**
27	**Pipe Nominal Size**	(inch)	**1**	**1**	**1**	**1**	**1**	**1**	**1**	**1**
28		**Calculation Result**	**OK**	**OK**	**OK**	**OK**	**OK**	**OK**	**OK**	**OK**
29	Inlet Press.	(Input) (kg/cm^2G)	7.00	7.00	7.00	7.00	7.00	7.00	7.00	7.00
30	Inlet Press.	(Calcul'd) (kg/cm^2G)	**7.00**	**7.00**	**7.00**	**7.00**	**7.00**	**7.00**	**7.00**	**7.00**
31	Velocity	@ Inlet (m/sec)	2.21	0.37	1.48	0.81	2.21	1.48	1.48	1.48
32	Reynolds No.	@ Inlet (-)	26672.46	4445.41	17781.64	9779.90	26672.46	17781.64	17781.64	17781.64
33	d*V*V/2g	@ Inlet (kg/cm^2)	2.23	0.06	0.99	0.30	2.23	0.99	0.99	0.99
34	4*F*L/D	@ Inlet (-)	116.58	167.37	124.19	139.13	116.58	124.19	124.19	124.19
35	dP/100m	@ Inlet (kg/cm^2)	0.03	0.00	0.01	0.00	0.03	0.01	0.01	0.01
36	Outlet Press.	(Input) (kg/cm^2G)								
37	Outlet Press.	(Calcul'd) (kg/cm^2G)	**6.97**	**7.00**	**6.99**	**7.00**	**6.97**	**6.99**	**6.99**	**6.99**
38	**Velocity**	**@ Outlet (m/sec)**	**2.22**	**0.37**	**1.48**	**0.81**	**2.22**	**1.48**	**1.48**	**1.48**
39		Limit	60.96	60.96	60.96	60.96	60.96	60.96	60.96	60.96
40	Sonic Velocity	@ Outlet (m/sec)	351.60	351.60	351.60	351.60	351.60	351.60	351.60	351.60
41	Mach No.	@ Outlet (-)	0.01	0.00	0.00	0.00	0.01	0.00	0.00	0.00
42	Reynolds No.	@ Outlet (-)	26672.46	4445.41	17781.64	9779.90	26672.46	17781.64	17781.64	17781.64
43	d*V*V/2g	@ Outlet (kg/cm^2)	2.24	0.06	0.99	0.30	2.24	0.99	0.99	0.99
44	4*F*L/D	@ Outlet (-)	116.58	167.37	124.19	139.13	116.58	124.19	124.19	124.19
45	**dP/100m**	**@ Outlet (kg/cm^2)**	**0.026**	**0.001**	**0.012**	**0.004**	**0.026**	**0.012**	**0.012**	**0.012**
46		Limit	N/A	N/A	N/A	N/A	N/A	N/A	N/A	N/A
47	**Straight Pipe dP**	(kg/cm^2)	**0.026**	**0.001**	**0.012**	**0.004**	**0.026**	**0.012**	**0.012**	**0.012**
48	dP of Control Valve	(kg/cm^2)								
49	dP of Heat Exchanger	(kg/cm^2)								
50	dP of Column	(kg/cm^2)								
51	dP of Strainer	(kg/cm^2)								
52	dP of Orifice	(kg/cm^2)								
53	Other dP	(kg/cm^2)								
54	Static Head	(m)								
55		(kg/cm^2)								
56	**Equip dP**	(kg/cm^2)								
57	Pipe Entrance									
58	Pipe Exit									
59	90 Elbow									
60	Tee									
61	Globe Valve									
62	Gate Valve									
63	Check Valve									
64	Butterfly Valve									
65	Ball valve									
66	Contraction									
67	Enlargement									
68	Other's K									
69	**Sum (Ki)**									
70	**Fitting dP**	(kg/cm^2)								
71	**Total dP**	(kg/cm^2)	**0.026**	**0.001**	**0.012**	**0.004**	**0.026**	**0.012**	**0.012**	**0.012**
72	**Remarks**									
73										
74										
75										
76										
77										

PT LOTTE CHEMICAL INDONESIA

LINE HYDRAULIC CALCULATION SHEET (LINE WP5)

LOTTE E&C

1	PROJECT :	LINE PROJECT			JOB NO. :	15005					REVISION
2	CLIENT :	PT LOTTE CHEMICAL INDONESIA			DOCU. NO. :	LINE-900-BC-4-0001					
3	LOCATION :	CILEGON, INDONESIA			P&ID NO. :	REFER TO ROW NO. 10					
4	UNIT :	**WP5**			CASE :	DESIGN					
5	SERVICE :	**3.8.4 NITROGEN**			SHEET :	16 OF 23 (UTILITY)					
6	**Item**		**TK-401A/B**			**TK-402**					
7	Line No		N-4001 / 4002	N-4001 / 4002	N-4101 / 4102	N-4003	N-4004	N-4004			
8		**From**	**N2 HDR**	**PCV-4001A/B**	**PV-4001A/B**	**N2 HDR**	**PCV-4002**	**PV-4006A**			
9		**To**	**PCV-4001A/B**	**PV-4001A/B**	**TK-401A/B**	**PCV-4002**	**PV-4006A**	**HC-4019**			
10		P&ID No.	904-0001	904-0001	904-0001	904-0002	904-0002	904-0002			
11		Piping Material Class	1C1D	1C1P	1C1P	1C1D	1C1P	1C1P			
12		Pipe Schedule	40	40	40	40	40	40			
13		Pipe Roughness (mm)	0.046	0.046	0.046	0.046	0.046	0.046			
14		**Fluid**	**N2**	**N2**	**N2**	**N2**	**N2**	**N2**			
15	Calc Mode (L, Vu, Vd)		Vu	Vu	Vd	Vu	Vu	Vd			
16	Temperature	: T (C)	25.0	25.0	25.0	25.0	25.0	25.0			
17	Pressure	: P (kg/cm^2G)	7.00	1.00	0.01	7.00	2.40	0.03			
18	Density	@ T,P (kg/m^3)									
19	Molecular	@ T,P (-)	28.00	28.00	28.00	28.00	28.00	28.00			
20	Compress. Fact.	@ T,P (-)	1.00	1.00	1.00	1.00	1.00	1.00			
21	Viscosity	@ T,P (cP)	0.02	0.02	0.02	0.02	0.02	0.02			
22	C_P / C_V	@ T,P	1.40	1.40	1.40	1.40	1.40	1.40			
23	M/B Flow Rate	(kg/h)	1105	1105	1105	1787	1787	1787			
24	Excess Ratio	(-)	1.10	1.10	1.10	1.10	1.10	1.10			
25	Flow Rate	(kg/h)	1216	1216	1216	1966	1966	1966			
26	**Line Length**	(m)	**100**	**10**	**5**	**100**	**100**	**100**			
27	**Pipe Nominal Size**	(inch)	**3**	**4**	**6**	**6**	**4**	**8**			
28		**Calculation Result**	**OK**	**OK**	**OK**	**OK**	**OK**	**OK**			
29	Inlet Press.	(Input) (kg/cm^2G)	7.00	1.00		7.00	2.40				
30	Inlet Press.	(Calcul'd) (kg/cm^2G)	**7.00**	**1.00**	**0.01**	**7.00**	**2.40**	**0.04**			
31	Velocity	@ Inlet (m/sec)	7.95	18.24	15.65	3.29	17.47	14.21			
32	Reynolds No.	@ Inlet (-)	275820.72	210196.65	139530.73	225648.34	339928.87	171473.59			
33	d*V*V/2g	@ Inlet (kg/cm^2)	28.69	38.24	14.46	4.91	59.22	12.26			
34	4*F*L/D	@ Inlet (-)	24.13	1.81	0.60	11.34	17.36	8.70			
35	dP/100m	@ Inlet (kg/cm^2)	0.07	0.07	0.02	0.01	0.10	0.01			
36	Outlet Press.	(Input) (kg/cm^2G)			0.01			0.03			
37	Outlet Press.	(Calcul'd) (kg/cm^2G)	**6.93**	**0.99**	**0.01**	**6.99**	**2.30**	**0.03**			
38	**Velocity**	**@ Outlet (m/sec)**	**8.02**	**18.30**	**15.67**	**3.29**	**18.02**	**14.36**			
39		Limit	60.96	60.96	60.96	60.96	60.96	60.96			
40	Sonic Velocity	@ Outlet (m/sec)	351.95	351.95	351.95	351.95	351.95	351.95			
41	Mach No.	@ Outlet (-)	0.02	0.05	0.04	0.01	0.05	0.04			
42	Reynolds No.	@ Outlet (-)	275820.72	210196.65	139530.73	225648.34	339928.87	171473.59			
43	d*V*V/2g	@ Outlet (kg/cm^2)	28.94	38.37	14.47	4.92	61.09	12.38			
44	4*F*L/D	@ Outlet (-)	24.13	1.81	0.60	11.34	17.36	8.70			
45	**dP/100m**	**@ Outlet (kg/cm^2)**	**0.070**	**0.069**	**0.017**	**0.006**	**0.106**	**0.011**			
46		Limit	N/A	N/A	N/A	N/A	N/A	N/A			
47	**Straight Pipe dP**	(kg/cm^2)	**0.070**	**0.007**	**0.001**	**0.006**	**0.105**	**0.011**			
48	dP of Control Valve	(kg/cm^2)									
49	dP of Heat Exchanger	(kg/cm^2)									
50	dP of Column	(kg/cm^2)									
51	dP of Strainer	(kg/cm^2)									
52	dP of Orifice	(kg/cm^2)									
53	Other dP	(kg/cm^2)									
54	Static Head	(m)									
55		(kg/cm^2)									
56	**Equip dP**	(kg/cm^2)									
57	Pipe Entrance										
58	Pipe Exit										
59	90 Elbow										
60	Tee										
61	Globe Valve										
62	Gate Valve										
63	Check Valve										
64	Butterfly Valve										
65	Ball valve										
66	Contraction										
67	Enlargement										
68	Other's K										
69	**Sum (Ki)**										
70	**Fitting dP**	(kg/cm^2)									
71	**Total dP**	(kg/cm^2)	**0.070**	**0.007**	**0.001**	**0.006**	**0.105**	**0.011**			
72	**Remarks**										
73											
74											
75											
76											
77											

PT LOTTE CHEMICAL INDONESIA

LINE HYDRAULIC CALCULATION SHEET (LINE WP5)

LOTTE E&C

1	PROJECT :	LINE PROJECT			JOB NO. :	15005					REVISION
2	CLIENT :	PT LOTTE CHEMICAL INDONESIA			DOCU. NO. :	LINE-900-BC-4-0001					
3	LOCATION :	CILEGON, INDONESIA			P&ID NO. :	REFER TO ROW NO. 10					
4	UNIT :	**WP5**			CASE :	DESIGN					
5	SERVICE :	**3.8.4 NITROGEN**			SHEET :	17 OF 23 (UTILITY)					
6	**Item**		**TK-403**			**TK-404A/B**					
7	Line No		N-4005	N-4105	N-4105	N-4006 / 4007	N-4106 / 4107	N-4106 / 4107			
8		**From**	**N2 HDR**	**PCV-4003**	**PV-4007**	**N2 HDR**	**PCV-4004A/B**	**PV-4009A/B**			
9		**To**	**PCV-4003**	**PV-4007**	**TK-403**	**PCV-4004A/B**	**PV-4009A/B**	**TK-404A/B**			
10		P&ID No.	904-0003	904-0003	904-0003	904-0004	904-0004	904-0004			
11		Piping Material Class	1C1D	1C1P	1C1P	1C1D	1C1P	1C1P			
12		Pipe Schedule	40	40	40	40	40	40			
13		Pipe Roughness (mm)	0.046	0.046	0.046	0.046	0.046	0.046			
14		**Fluid**	**N2**	**N2**	**N2**	**N2**	**N2**	**N2**			
15	Calc Mode (L, Vu, Vd)		Vu	Vu	Vd	Vu	Vu	Vd			
16	Temperature	: T (C)	25.0	25.0	25.0	25.0	25.0	25.0			
17	Pressure	: P (kg/cm^2G)	7.00	1.00	0.01	7.00	1.00	0.01			
18	Density	@ T,P (kg/m^3)									
19	Molecular	@ T,P (-)	28.00	28.00	28.00	28.00	28.00	28.00			
20	Compress. Fact.	@ T,P (-)	1.00	1.00	1.00	1.00	1.00	1.00			
21	Viscosity	@ T,P (cP)	0.02	0.02	0.02	0.02	0.02	0.02			
22	C_P / C_V	@ T,P	1.40	1.40	1.40	1.40	1.40	1.40			
23	M/B Flow Rate	(kg/h)	1339	1339	1339	1707	1707	1707			
24	Excess Ratio	(-)	1.10	1.10	1.10	1.10	1.10	1.10			
25	Flow Rate	(kg/h)	1473	1473	1473	1878	1878	1878			
26	**Line Length**	(m)	**100**	**10**	**5**	**100**	**10**	**5**			
27	**Pipe Nominal Size**	(inch)	**4**	**4**	**6**	**4**	**4**	**6**			
28		**Calculation Result**	**OK**	**OK**	**OK**	**OK**	**OK**	**OK**			
29	Inlet Press.	(Input) (kg/cm^2G)	7.00	1.00		7.00	1.00				
30	Inlet Press.	(Calcul'd) (kg/cm^2G)	**7.00**	**1.00**	**0.01**	**7.00**	**1.00**	**0.01**			
31	Velocity	@ Inlet (m/sec)	5.59	22.10	18.96	7.13	28.18	24.16			
32	Reynolds No.	@ Inlet (-)	254661.32	254661.32	169046.85	324741.93	324741.93	215567.09			
33	d*V*V/2g	@ Inlet (kg/cm^2)	14.21	56.13	21.21	23.10	91.27	34.47			
34	4*F*L/D	@ Inlet (-)	17.76	1.78	0.59	17.42	1.74	0.57			
35	dP/100m	@ Inlet (kg/cm^2)	0.03	0.10	0.02	0.04	0.16	0.04			
36	Outlet Press.	(Input) (kg/cm^2G)		1.00	0.01		1.00	0.01			
37	Outlet Press.	(Calcul'd) (kg/cm^2G)	**6.97**	**0.99**	**0.01**	**6.96**	**0.98**	**0.01**			
38	**Velocity**	**@ Outlet (m/sec)**	**5.61**	**22.21**	**18.98**	**7.17**	**28.41**	**24.20**			
39		Limit	60.96	60.96	60.96	60.96	60.96	60.96			
40	Sonic Velocity	@ Outlet (m/sec)	351.95	351.95	351.95	351.95	351.95	351.95			
41	Mach No.	@ Outlet (-)	0.02	0.06	0.05	0.02	0.08	0.07			
42	Reynolds No.	@ Outlet (-)	254661.32	254661.32	169046.85	324741.93	324741.93	215567.09			
43	d*V*V/2g	@ Outlet (kg/cm^2)	14.25	56.40	21.24	23.22	91.99	34.54			
44	4*F*L/D	@ Outlet (-)	17.76	1.78	0.59	17.42	1.74	0.57			
45	**dP/100m**	**@ Outlet (kg/cm^2)**	**0.025**	**0.100**	**0.025**	**0.040**	**0.160**	**0.039**			
46		Limit	N/A	N/A	N/A	N/A	N/A	N/A			
47	**Straight Pipe dP**	(kg/cm^2)	**0.025**	**0.010**	**0.001**	**0.040**	**0.016**	**0.002**			
48	dP of Control Valve	(kg/cm^2)									
49	dP of Heat Exchanger	(kg/cm^2)									
50	dP of Column	(kg/cm^2)									
51	dP of Strainer	(kg/cm^2)									
52	dP of Orifice	(kg/cm^2)									
53	Other dP	(kg/cm^2)									
54	Static Head	(m)									
55		(kg/cm^2)									
56	**Equip dP**	(kg/cm^2)									
57	Pipe Entrance										
58	Pipe Exit										
59	90 Elbow										
60	Tee										
61	Globe Valve										
62	Gate Valve										
63	Check Valve										
64	Butterfly Valve										
65	Ball valve										
66	Contraction										
67	Enlargement										
68	Other's K										
69	**Sum (Ki)**										
70	**Fitting dP**	(kg/cm^2)									
71	**Total dP**	(kg/cm^2)	**0.025**	**0.010**	**0.001**	**0.040**	**0.016**	**0.002**			
72	**Remarks**										
73											
74											
75											
76											
77											

PT LOTTE CHEMICAL INDONESIA

LINE HYDRAULIC CALCULATION SHEET (LINE WP5)

LOTTE E&C

1	PROJECT :	LINE PROJECT			JOB NO. :	15005					REVISION
2	CLIENT :	PT LOTTE CHEMICAL INDONESIA			DOCU. NO. :	LINE-900-BC-4-0001					
3	LOCATION :	CILEGON, INDONESIA			P&ID NO. :	REFER TO ROW NO. 10					
4	UNIT :	**WP5**			CASE :	DESIGN					
5	SERVICE :	**3.8.4 NITROGEN**			SHEET :	18 OF 23 (UTILITY)					
6	**Item**		**TK-405**			**TK-406**					
7	Line No		N-4008	N-4108	N-4108	N-4009	N-4109	N-4109			
8		**From**	**N2 HDR**	**PCV-4005**	**PV-4011**	**N2 HDR**	**PCV-4006**	**PV-4013**			
9		**To**	**PV-4011**	**PV-4011**	**TK-405**	**PCV-4006**	**PV-4013**	**TK-406**			
10		P&ID No.	904-0005	904-0005	904-0005	904-0006	904-0006	904-0006			
11		Piping Material Class	1C1D	1C1P1	1C1P1	1C1D	1C1P	1C1P			
12		Pipe Schedule	40	40	40	40	40	40			
13		Pipe Roughness (mm)	0.046	0.046	0.046	0.046	0.046	0.046			
14		**Fluid**	**N2**	**N2**	**N2**	**N2**	**N2**	**N2**			
15	Calc Mode (L, Vu, Vd)		Vu	Vu	Vd	Vu	Vu	Vd			
16	Temperature	: T (C)	25.0	25.0	25.0	25.0	25.0	25.0			
17	Pressure	: P (kg/cm^2G)	7.00	1.00	0.01	7.00	1.00	0.01			
18	Density	@ T,P (kg/m^3)									
19	Molecular	@ T,P (-)	28.00	28.00	28.00	28.00	28.00	28.00			
20	Compress. Fact.	@ T,P (-)	1.00	1.00	1.00	1.00	1.00	1.00			
21	Viscosity	@ T,P (cP)	0.02	0.02	0.02	0.02	0.02	0.02			
22	C_P / C_V	@ T,P	1.40	1.40	1.40	1.40	1.40	1.40			
23	M/B Flow Rate	(kg/h)	1484	1484	1484	1029	1029	1029			
24	Excess Ratio	(-)	1.10	1.10	1.10	1.10	1.10	1.10			
25	Flow Rate	(kg/h)	1632	1632	1632	1132	1132	1132			
26	**Line Length**	(m)	**100**	**10**	**5**	**100**	**5**	**5**			
27	**Pipe Nominal Size**	(inch)	**4**	**4**	**6**	**3**	**4**	**6**			
28		**Calculation Result**	**OK**	**OK**	**OK**	**OK**	**OK**	**OK**			
29	Inlet Press.	(Input) (kg/cm^2G)	7.00	1.00		7.00	1.00				
30	Inlet Press.	(Calcul'd) (kg/cm^2G)	**7.00**	**1.00**	**0.01**	**7.00**	**1.00**	**0.01**			
31	Velocity	@ Inlet (m/sec)	6.20	24.50	21.01	7.40	16.98	14.57			
32	Reynolds No.	@ Inlet (-)	282243.69	282243.69	187356.31	256787.85	195692.13	129902.48			
33	d*V*V/2g	@ Inlet (kg/cm^2)	17.45	68.94	26.05	24.87	33.14	12.53			
34	4*F*L/D	@ Inlet (-)	17.61	1.76	0.58	24.25	0.91	0.61			
35	dP/100m	@ Inlet (kg/cm^2)	0.03	0.12	0.03	0.06	0.06	0.02			
36	Outlet Press.	(Input) (kg/cm^2G)		1.00	0.01		1.00	0.01			
37	Outlet Press.	(Calcul'd) (kg/cm^2G)	**6.97**	**0.99**	**0.01**	**6.94**	**1.00**	**0.01**			
38	**Velocity**	**@ Outlet (m/sec)**	**6.22**	**24.64**	**21.04**	**7.46**	**17.01**	**14.59**			
39		Limit	60.96	60.96	60.96	60.96	60.96	60.96			
40	Sonic Velocity	@ Outlet (m/sec)	351.95	351.95	351.95	351.95	351.95	351.95			
41	Mach No.	@ Outlet (-)	0.02	0.07	0.06	0.02	0.05	0.04			
42	Reynolds No.	@ Outlet (-)	282243.69	282243.69	187356.31	256787.85	195692.13	129902.48			
43	d*V*V/2g	@ Outlet (kg/cm^2)	17.52	69.36	26.09	25.06	33.19	12.54			
44	4*F*L/D	@ Outlet (-)	17.61	1.76	0.58	24.25	0.91	0.61			
45	**dP/100m**	**@ Outlet (kg/cm^2)**	**0.031**	**0.122**	**0.030**	**0.061**	**0.060**	**0.015**			
46		Limit	N/A	N/A	N/A	N/A	N/A	N/A			
47	**Straight Pipe dP**	(kg/cm^2)	**0.031**	**0.012**	**0.002**	**0.061**	**0.003**	**0.001**			
48	dP of Control Valve	(kg/cm^2)									
49	dP of Heat Exchanger	(kg/cm^2)									
50	dP of Column	(kg/cm^2)									
51	dP of Strainer	(kg/cm^2)									
52	dP of Orifice	(kg/cm^2)									
53	Other dP	(kg/cm^2)									
54	Static Head	(m)									
55		(kg/cm^2)									
56	**Equip dP**	(kg/cm^2)									
57	Pipe Entrance										
58	Pipe Exit										
59	90 Elbow										
60	Tee										
61	Globe Valve										
62	Gate Valve										
63	Check Valve										
64	Butterfly Valve										
65	Ball valve										
66	Contraction										
67	Enlargement										
68	Other's K										
69	**Sum (Ki)**										
70	**Fitting dP**	(kg/cm^2)									
71	**Total dP**	(kg/cm^2)	**0.031**	**0.012**	**0.002**	**0.061**	**0.003**	**0.001**			
72	**Remarks**										
73											
74											
75											
76											
77											

PT LOTTE CHEMICAL INDONESIA

LINE HYDRAULIC CALCULATION SHEET (LINE WP5)

LOTTE E&C

1	PROJECT :	LINE PROJECT			JOB NO. :	15005					REVISION
2	CLIENT :	PT LOTTE CHEMICAL INDONESIA			DOCU. NO. :	LINE-900-BC-4-0001					
3	LOCATION :	CILEGON, INDONESIA			P&ID NO. :	REFER TO ROW NO. 10					
4	UNIT :	**WP5**			CASE :	DESIGN					
5	SERVICE :	**3.8.4 NITROGEN**			SHEET :	19 OF 23 (UTILITY)					
6	**Item**		**TK-407**			**TK-408**					
7	Line No		N-4010	N-4110	N-4110	N-4011	N-4111	N-4111			
8		**From**	**N2 HDR**	**PCV-4007**	**PV-4015**	**N2 HDR**	**PCV-4008**	**PV-4017**			
9		**To**	**PCV-4007**	**PV-4015**	**TK-407**	**PCV-4008**	**PV-4017**	**TK-408**			
10		P&ID No.	904-0007	904-0007	904-0007	904-0007	904-0008	904-0008			
11		Piping Material Class	1C1D	1C1P	1C1P	1C1D	1C1P	1C1P			
12		Pipe Schedule	40	40	40	40	40	40			
13		Pipe Roughness (mm)	0.046	0.046	0.046	0.046	0.046	0.046			
14		**Fluid**	**N2**	**N2**	**N2**	**N2**	**N2**	**N2**			
15	Calc Mode (L, Vu, Vd)		Vu	Vu	Vd	Vu	Vu	Vd			
16	Temperature	: T (C)	25.0	25.0	25.0	25.0	25.0	25.0			
17	Pressure	: P (kg/cm^2G)	7.00	1.00	0.00	7.00	1.00	0.01			
18	Density	@ T,P (kg/m^3)									
19	Molecular	@ T,P (-)	28.00	28.00	28.00	28.00	28.00	28.00			
20	Compress. Fact.	@ T,P (-)	1.00	1.00	1.00	1.00	1.00	1.00			
21	Viscosity	@ T,P (cP)	0.02	0.02	0.02	0.02	0.02	0.02			
22	C_P / C_V	@ T,P	1.40	1.40	1.40	1.40	1.40	1.40			
23	M/B Flow Rate	(kg/h)	1029	1029	1029	574	574	574			
24	Excess Ratio	(-)	1.10	1.10	1.10	1.10	1.10	1.10			
25	Flow Rate	(kg/h)	1132	1132	1132	632	632	632			
26	**Line Length**	(m)	**100**	**10**	**1**	**100**	**10**	**5**			
27	**Pipe Nominal Size**	(inch)	**3**	**4**	**6**	**3**	**3**	**4**			
28		**Calculation Result**	**OK**	**OK**	**OK**	**OK**	**OK**	**OK**			
29	Inlet Press.	(Input) (kg/cm^2G)	7.00	1.00		7.00	1.00				
30	Inlet Press.	(Calcul'd) (kg/cm^2G)	**7.00**	**1.00**	**0.00**	**7.00**	**1.00**	**0.01**			
31	Velocity	@ Inlet (m/sec)	7.40	16.98	14.72	4.13	16.32	18.44			
32	Reynolds No.	@ Inlet (-)	256787.85	195692.13	129902.48	143323.81	143323.81	109223.79			
33	d*V*V/2g	@ Inlet (kg/cm^2)	24.87	33.14	12.66	7.75	30.61	20.08			
34	4*F*L/D	@ Inlet (-)	24.25	1.82	0.12	25.50	2.55	0.97			
35	dP/100m	@ Inlet (kg/cm^2)	0.06	0.06	0.02	0.02	0.08	0.04			
36	Outlet Press.	(Input) (kg/cm^2G)		1.00	0.00		1.00	0.01			
37	Outlet Press.	(Calcul'd) (kg/cm^2G)	**6.94**	**0.99**		**6.98**	**0.99**	**0.01**			
38	**Velocity**	**@ Outlet (m/sec)**	**7.46**	**17.03**	**14.73**	**4.14**	**16.39**	**18.47**			
39		Limit	60.96	60.96	60.96	60.96	60.96	60.96			
40	Sonic Velocity	@ Outlet (m/sec)	351.95	351.95	351.95	351.95	351.95	351.95			
41	Mach No.	@ Outlet (-)	0.02	0.05	0.04	0.01	0.05	0.05			
42	Reynolds No.	@ Outlet (-)	256787.85	195692.13	129902.48	143323.81	143323.81	109223.79			
43	d*V*V/2g	@ Outlet (kg/cm^2)	25.06	33.24	12.66	7.77	30.73	20.12			
44	4*F*L/D	@ Outlet (-)	24.25	1.82	0.12	25.50	2.55	0.97			
45	**dP/100m**	**@ Outlet (kg/cm^2)**	**0.061**	**0.060**	**0.015**	**0.020**	**0.078**	**0.039**			
46		Limit	N/A	N/A	N/A	N/A	N/A	N/A			
47	**Straight Pipe dP**	(kg/cm^2)	**0.061**	**0.006**	**0.000**	**0.020**	**0.008**	**0.002**			
48	dP of Control Valve	(kg/cm^2)									
49	dP of Heat Exchanger	(kg/cm^2)									
50	dP of Column	(kg/cm^2)									
51	dP of Strainer	(kg/cm^2)									
52	dP of Orifice	(kg/cm^2)									
53	Other dP	(kg/cm^2)									
54	Static Head	(m)									
55		(kg/cm^2)									
56	**Equip dP**	(kg/cm^2)									
57	Pipe Entrance										
58	Pipe Exit										
59	90 Elbow										
60	Tee										
61	Globe Valve										
62	Gate Valve										
63	Check Valve										
64	Butterfly Valve										
65	Ball valve										
66	Contraction										
67	Enlargement										
68	Other's K										
69	**Sum (Ki)**										
70	**Fitting dP**	(kg/cm^2)									
71	**Total dP**	(kg/cm^2)	**0.061**	**0.006**	**0.000**	**0.020**	**0.008**	**0.002**			
72	**Remarks**										
73											
74											
75											
76											
77											

PT LOTTE CHEMICAL INDONESIA

LINE HYDRAULIC CALCULATION SHEET (LINE WP5)

LOTTE E&C

1	PROJECT :	LINE PROJECT			JOB NO. :	15005					REVISION
2	CLIENT :	PT LOTTE CHEMICAL INDONESIA			DOCU. NO. :	LINE-900-BC-4-0001					
3	LOCATION :	CILEGON, INDONESIA			P&ID NO. :	REFER TO ROW NO. 10					
4	UNIT :	**WP5**			CASE :	DESIGN					
5	SERVICE :	**3.8.4 NITROGEN**			SHEET :	20 OF 23 (UTILITY)					
6	**Item**		**TK-409A/B**			**Z-401(V)**	**Z-401(L)**	**Z-402**	**Z-403**	**Z-404**	
7	Line No		N-4012 / 4013	N-4112 / 4113	N-4112 / 4113	N-4020	N-4021	N-4022	N-4023	N-4024	
8		**From**	**N2 HDR**	**PCV-4009A/B**	**PV-4018A/B**	**N2 HDR**	**N2 HDR**	**N2 HDR**	**N2 HDR**	**N2 HDR**	
9		**To**	**PCV-4009A/B**	**PV-4018A/B**	**TK-409A/B**	**Z-401(V)**	**Z-401(L)**	**Z-402**	**Z-403**	**Z-404**	
10		P&ID No.	904-0009	904-0009	904-0009	904-0100	904-0100	904-0100	904-0100	904-0100	
11		Piping Material Class	1C1D	1C1P	1C1P	1C1D	1C1D	1C1D	1C1D	1C1D	
12		Pipe Schedule	80	40	40	80	80	80	80	80	
13		Pipe Roughness (mm)	0.046	0.046	0.046	0.046	0.046	0.046	0.046	0.046	
14		**Fluid**	**N2**	**N2**	**N2**	**N2**	**N2**	**N2**	**N2**	**N2**	
15	Calc Mode (L, Vu, Vd)		Vu	Vu	Vd	Vu	Vu	Vu	Vu	Vu	
16	Temperature	: T (C)	25.0	25.0	25.0	25.0	25.0	25.0	25.0	25.0	
17	Pressure	: P (kg/cm^2G)	7.00	1.00	0.01	7.00	7.00	7.00	7.00	7.00	
18	Density	@ T,P (kg/m^3)									
19	Molecular	@ T,P (-)	28.00	28.00	28.00	28.00	28.00	28.00	28.00	28.00	
20	Compress. Fact.	@ T,P (-)	1.00	1.00	1.00	1.00	1.00	1.00	1.00	1.00	
21	Viscosity	@ T,P (cP)	0.02	0.02	0.02	0.02	0.02	0.02	0.02	0.02	
22	C_P / C_V	@ T,P	1.40	1.40	1.40	1.40	1.40	1.40	1.40	1.40	
23	M/B Flow Rate	(kg/h)	259	259	259	50	50	50	50	50	
24	Excess Ratio	(-)	1.10	1.10	1.10	1.10	1.10	1.10	1.10	1.10	
25	Flow Rate	(kg/h)	285	285	285	55	55	55	55	55	
26	**Line Length**	(m)	**100**	**100**	**100**	**100**	**100**	**100**	**100**	**100**	
27	**Pipe Nominal Size**	(inch)	**2**	**2**	**3**	**1**	**1**	**1**	**1**	**1**	
28		**Calculation Result**	**OK**	**OK**	**OK**	**OK**	**OK**	**OK**	**OK**	**OK**	
29	Inlet Press.	(Input) (kg/cm^2G)	7.00	1.00		7.00	7.00	7.00	7.00	7.00	
30	Inlet Press.	(Calcul'd) (kg/cm^2G)	**7.00**	**1.00**	**0.04**	**7.00**	**7.00**	**7.00**	**7.00**	**7.00**	
31	Velocity	@ Inlet (m/sec)	4.66	16.21	13.89	3.69	3.69	3.69	3.69	3.69	
32	Reynolds No.	@ Inlet (-)	102198.24	95871.68	64586.98	44454.10	44454.10	44454.10	44454.10	44454.10	
33	d*V*V/2g	@ Inlet (kg/cm^2)	9.86	30.18	11.74	6.19	6.19	6.19	6.19	6.19	
34	4*F*L/D	@ Inlet (-)	44.47	41.61	28.18	109.35	109.35	109.35	109.35	109.35	
35	dP/100m	@ Inlet (kg/cm^2)	0.04	0.13	0.03	0.07	0.07	0.07	0.07	0.07	
36	Outlet Press.	(Input) (kg/cm^2G)		1.00	0.01						
37	Outlet Press.	(Calcul'd) (kg/cm^2G)	**6.76**	**0.87**	**0.01**	**6.93**	**6.93**	**6.93**	**6.93**	**6.93**	
38	**Velocity**	**@ Outlet (m/sec)**	**4.81**	**17.31**	**14.34**	**3.72**	**3.72**	**3.72**	**3.72**	**3.72**	
39		Limit	60.96	60.96	60.96	60.96	60.96	60.96	60.96	60.96	
40	Sonic Velocity	@ Outlet (m/sec)	351.95	351.95	351.95	351.60	351.60	351.60	351.60	351.60	
41	Mach No.	@ Outlet (-)	0.01	0.05	0.04	0.01	0.01	0.01	0.01	0.01	
42	Reynolds No.	@ Outlet (-)	102198.24	95871.68	64586.98	44454.10	44454.10	44454.10	44454.10	44454.10	
43	d*V*V/2g	@ Outlet (kg/cm^2)	10.17	32.24	12.12	6.24	6.24	6.24	6.24	6.24	
44	4*F*L/D	@ Outlet (-)	44.47	41.61	28.18	109.35	109.35	109.35	109.35	109.35	
45	**dP/100m**	**@ Outlet (kg/cm^2)**	**0.045**	**0.134**	**0.034**	**0.068**	**0.068**	**0.068**	**0.068**	**0.068**	
46		Limit	N/A	N/A	N/A	N/A	N/A	N/A	N/A	N/A	
47	**Straight Pipe dP**	(kg/cm^2)	**0.045**	**0.130**	**0.034**	**0.068**	**0.068**	**0.068**	**0.068**	**0.068**	
48	dP of Control Valve	(kg/cm^2)									
49	dP of Heat Exchanger	(kg/cm^2)									
50	dP of Column	(kg/cm^2)									
51	dP of Strainer	(kg/cm^2)									
52	dP of Orifice	(kg/cm^2)	0.2								
53	Other dP	(kg/cm^2)									
54	Static Head	(m)									
55		(kg/cm^2)									
56	**Equip dP**	(kg/cm^2)	**0.200**								
57	Pipe Entrance										
58	Pipe Exit										
59	90 Elbow										
60	Tee										
61	Globe Valve										
62	Gate Valve										
63	Check Valve										
64	Butterfly Valve										
65	Ball valve										
66	Contraction										
67	Enlargement										
68	Other's K										
69	**Sum (Ki)**										
70	**Fitting dP**	(kg/cm^2)									
71	**Total dP**	(kg/cm^2)	**0.245**	**0.130**	**0.034**	**0.068**	**0.068**	**0.068**	**0.068**	**0.068**	
72	**Remarks**										
73											
74											
75											
76											
77											

PT LOTTE CHEMICAL INDONESIA

LINE HYDRAULIC CALCULATION SHEET (LINE WP5)

LOTTE E&C

1	PROJECT :	LINE PROJECT	JOB NO. :	15005
2	CLIENT :	PT LOTTE CHEMICAL INDONESIA	DOCU. NO. :	LINE-900-BC-4-0001
3	LOCATION :	CILEGON, INDONESIA	P&ID NO. :	REFER TO ROW NO. 10
4	UNIT :	**WP5**	CASE :	DESIGN
5	SERVICE :	**3.8.4 NITROGEN**	SHEET :	21 OF 23 (UTILITY)

REVISION

	Item			DRAIN DRUM		OWS DRUM					
7	Line No			N-1200/4201/4202	N-1201/4203/4204	N-1100/3100/4100/4200	N-1190/3190/4190/4290				
8		**From**		**N2 HDR**	**MANUAL VALVE**	**N2 HDR**	**MANUAL VALVE**				
9		**To**		**MANUAL VALVE**	**D-141/441/442**	**MANUAL VALVE**	**D-150/350/450/451**				
10		P&ID No.		904-0101	904-0101	904-0102	904-0102				
11		Piping Material Class		1C1D	1C1P	1C1D	1C1P				
12		Pipe Schedule		80	80	80	80				
13		Pipe Roughness (mm)		0.046	0.046	0.046	0.046				
14		**Fluid**		**N2**	**N2**	**N2**	**N2**				
15	Calc Mode (L, Vu, Vd)			Vu	Vd	Vu	Vd				
16	Temperature	: T	(C)	25.0	25.0	25.0	25.0				
17	Pressure	: P	(kg/cm^2G)	7.00	0.01	7.00	0.01				
18	Density	@ T,P	(kg/m^3)								
19	Molecular	@ T,P	(-)	28.00	28.00	28.00	28.00				
20	Compress. Fact.	@ T,P	(-)	1.00	1.00	1.00	1.00				
21	Viscosity	@ T,P	(cP)	0.02	0.02	0.02	0.020				
22	C_P / C_V	@ T,P		1.40	1.40	1.40	1.410				
23	M/B Flow Rate		(kg/h)	11	11	46	46				
24	Excess Ratio		(-)	1.10	1.10	1.10	1.10				
25	Flow Rate		(kg/h)	12	12	51	51				
26	**Line Length**		(m)	**100**	**100**	**100**	**100**				
27	**Pipe Nominal Size**		(inch)	**1**	**1**	**1**	**1 1/2**				
28		**Calculation Result**		**OK**	**OK**	**OK**	**OK**				
29	Inlet Press.	(Input)	(kg/cm^2G)	7.00		7.00					
30	Inlet Press.	(Calcul'd)	(kg/cm^2G)	**7.00**	**0.04**	**7.00**	**0.06**				
31	Velocity	@ Inlet	(m/sec)	0.81	6.07	3.42	10.25				
32	Reynolds No.	@ Inlet	(-)	8801.91	8801.91	37008.04	23613.27				
33	d*V*V/2g	@ Inlet	(kg/cm^2)	0.30	2.24	5.31	6.48				
34	4*F*L/D	@ Inlet	(-)	142.29	142.29	111.67	72.24				
35	dP/100m	@ Inlet	(kg/cm^2)	0.00	0.03	0.06	0.05				
36	Outlet Press.	(Input)	(kg/cm^2G)		0.01		0.01				
37	Outlet Press.	(Calcul'd)	(kg/cm^2G)	**7.00**	**0.01**	**6.94**	**0.01**				
38	**Velocity**	**@ Outlet**	**(m/sec)**	**0.81**	**6.26**	**3.45**	**10.72**				
39			Limit	60.96	60.96	60.96	60.96				
40	Sonic Velocity	@ Outlet	(m/sec)	351.95	351.95	351.95	353.21				
41	Mach No.	@ Outlet	(-)	0.00	0.02	0.01	0.03				
42	Reynolds No.	@ Outlet	(-)	8801.91	8801.91	37008.04	23613.27				
43	d*V*V/2g	@ Outlet	(kg/cm^2)	0.30	2.31	5.35	6.78				
44	4*F*L/D	@ Outlet	(-)	142.29	142.29	111.67	72.24				
45	**dP/100m**	**@ Outlet**	**(kg/cm^2)**	**0.004**	**0.033**	**0.060**	**0.049**				
46			Limit	N/A	N/A	N/A	N/A				
47	**Straight Pipe dP**		(kg/cm^2)	**0.004**	**0.032**	**0.060**	**0.048**				
48	dP of Control Valve		(kg/cm^2)								
49	dP of Heat Exchanger		(kg/cm^2)								
50	dP of Column		(kg/cm^2)								
51	dP of Strainer		(kg/cm^2)								
52	dP of Orifice		(kg/cm^2)								
53	Other dP		(kg/cm^2)								
54	Static Head		(m)								
55			(kg/cm^2)								
56	**Equip dP**		(kg/cm^2)								
57	Pipe Entrance										
58	Pipe Exit										
59	90 Elbow										
60	Tee										
61	Globe Valve										
62	Gate Valve										
63	Check Valve										
64	Butterfly Valve										
65	Ball valve										
66	Contraction										
67	Enlargement										
68	Other's K										
69	**Sum (Ki)**										
70	**Fitting dP**		(kg/cm^2)								
71	**Total dP**		(kg/cm^2)	**0.004**	**0.032**	**0.060**	**0.048**				
72	**Remarks**										
73											
74											
75											
76											
77											

PT LOTTE CHEMICAL INDONESIA

LINE HYDRAULIC CALCULATION SHEET (LINE WP5)

LOTTE E&C

1	PROJECT :	LINE PROJECT	JOB NO. :	15005
2	CLIENT :	PT LOTTE CHEMICAL INDONESIA	DOCU. NO. :	LINE-900-BC-4-0001
3	LOCATION :	CILEGON, INDONESIA	P&ID NO. :	REFER TO ROW NO. 10
4	UNIT :	**WP5**	CASE :	DESIGN
5	SERVICE :	**3.8.4 NITROGEN**	SHEET :	22 OF 23 (UTILITY)

REVISION

	Item			NITROGEN SUB HEADERS							
7	Line No			N-2301	N-4301	N-4302	N-4303 / 4304	N-4305/4306	N-1301	N-3301	
8		**From**		**N-0014**	**N-0013**	**N-4301**	**N-4301**	**N-4301**	**N-0012**	**N-0011**	
9		**To**		**USER**	**USER**	**USER**	**USER**	**USER**	**USER**	**USER**	
10		P&ID No.		904-0108	904-0108	904-0108	904-0108	904-0108	904-0108	904-0108	
11		Piping Material Class		1C1D	1C1D	1C1D	1C1D	1C1D	1C1D	1C1D	
12		Pipe Schedule		40	40	40	40	80	80	80	
13		Pipe Roughness (mm)		0.046	0.046	0.046	0.046	0.046	0.046	0.046	
14		**Fluid**		**N2**	**N2**	**N2**	**N2**	**N2**	**N2**	**N2**	
15	Calc Mode (L, Vu, Vd)			Vu	Vu	Vu	Vu	Vu	Vu	Vu	
16	Temperature	: T	(C)	25.0	25.0	25.0	25.0	25.0	25.0	25.0	
17	Pressure	: P	(kg/cm^2G)	7.00	7.00	7.00	7.00	7.00	7.00	7.00	
18	Density	@ T,P	(kg/m^3)								
19	Molecular	@ T,P	(-)	28.00	28.00	28.00	28.00	28.00	28.00	28.00	
20	Compress. Fact.	@ T,P	(-)	1.00	1.00	1.00	1.00	1.00	1.00	1.00	
21	Viscosity	@ T,P	(cP)	0.02	0.02	0.02	0.02	0.02	0.02	0.02	
22	C_P / C_V	@ T,P		1.40	1.40	1.40	1.40	1.40	1.40	1.40	
23	M/B Flow Rate		(kg/h)	6,771	13,748	6,792	6,956	296	57	167	
24	Excess Ratio		(-)	1.10	1.10	1.10	1.10	1.10	1.10	1.10	
25	Flow Rate		(kg/h)	7,448	15,122	7,471	7,651	326	63	184	
26	**Line Length**		(m)	**100**	**100**	**100**	**100**	**100**	**100**	**100**	
27	**Pipe Nominal Size**		(inch)	**6**	**8**	**6**	**6**	**2**	**2**	**2**	
28		**Calculation Result**		**OK**	**OK**	**OK**	**OK**	**OK**	**OK**	**OK**	
29	Inlet Press.	(Input)	(kg/cm^2G)	7.00	7.00	7.00	7.00	7.00	7.00	7.00	
30	Inlet Press.	(Calcul'd)	(kg/cm^2G)	**7.00**	**7.00**	**7.00**	**7.00**	**7.00**	**7.00**	**7.00**	
31	Velocity	@ Inlet	(m/sec)	12.47	14.62	12.51	12.81	5.34	1.03	3.01	
32	Reynolds No.	@ Inlet	(-)	855024.23	1319158.01	857632.58	878295.44	117009.58	22611.98	66058.57	
33	d*V*V/2g	@ Inlet	(kg/cm^2)	70.56	96.99	70.99	74.46	12.93	0.48	4.12	
34	4*F*L/D	@ Inlet	(-)	10.23	7.29	10.23	10.22	43.91	55.20	46.67	
35	dP/100m	@ Inlet	(kg/cm^2)	0.07	0.07	0.07	0.08	0.06	0.00	0.02	
36	Outlet Press.	(Input)	(kg/cm^2G)								
37	Outlet Press.	(Calcul'd)	(kg/cm^2G)	**6.93**	**6.93**	**6.93**	**6.92**	**6.94**	**7.00**	**6.98**	
38	**Velocity**	**@ Outlet**	**(m/sec)**	**12.58**	**14.75**	**12.62**	**12.93**	**5.37**	**1.03**	**3.02**	
39			Limit	60.96	60.96	60.96	60.96	60.96	60.96	60.96	
40	Sonic Velocity	@ Outlet	(m/sec)	351.95	351.95	351.95	351.95	351.95	351.95	351.95	
41	Mach No.	@ Outlet	(-)	0.04	0.04	0.04	0.04	0.02	0.00	0.01	
42	Reynolds No.	@ Outlet	(-)	855024.23	1319158.01	857632.58	878295.44	117009.58	22611.98	66058.57	
43	d*V*V/2g	@ Outlet	(kg/cm^2)	71.21	97.86	71.65	75.17	13.02	0.48	4.13	
44	4*F*L/D	@ Outlet	(-)	10.23	7.29	10.23	10.22	43.91	55.20	46.67	
45	**dP/100m**	**@ Outlet**	**(kg/cm^2)**	**0.073**	**0.071**	**0.073**	**0.077**	**0.057**	**0.003**	**0.019**	
46			Limit	N/A	N/A	N/A	N/A	N/A	N/A	N/A	
47	**Straight Pipe dP**		(kg/cm^2)	**0.073**	**0.071**	**0.073**	**0.077**	**0.057**	**0.003**	**0.019**	
48	dP of Control Valve		(kg/cm^2)								
49	dP of Heat Exchanger		(kg/cm^2)								
50	dP of Column		(kg/cm^2)								
51	dP of Strainer		(kg/cm^2)								
52	dP of Orifice		(kg/cm^2)								
53	Other dP		(kg/cm^2)								
54	Static Head		(m)								
55			(kg/cm^2)								
56	**Equip dP**		(kg/cm^2)								
57	Pipe Entrance										
58	Pipe Exit										
59	90 Elbow										
60	Tee										
61	Globe Valve										
62	Gate Valve										
63	Check Valve										
64	Butterfly Valve										
65	Ball valve										
66	Contraction										
67	Enlargement										
68	Other's K										
69	**Sum (Ki)**										
70	**Fitting dP**		(kg/cm^2)								
71	**Total dP**		(kg/cm^2)	**0.073**	**0.071**	**0.073**	**0.077**	**0.057**	**0.003**	**0.019**	
72	**Remarks**										
73											
74											
75											
76											
77											

PT LOTTE CHEMICAL INDONESIA

LINE HYDRAULIC CALCULATION SHEET (LINE WP5)

LOTTE E&C

1	PROJECT :	LINE PROJECT	JOB NO. :	15005
2	CLIENT :	PT LOTTE CHEMICAL INDONESIA	DOCU. NO. :	LINE-900-BC-4-0001
3	LOCATION :	CILEGON, INDONESIA	P&ID NO. :	REFER TO ROW NO. 10
4	UNIT :	**WP5**	CASE :	DESIGN
5	SERVICE :	**3.8.5 FUEL GAS**	SHEET :	23 OF 23 (UTILITY)

REVISION

6	**Item**			**W-201**
7	Line No			FG-2001
8		**From**		**FG HDR**
9		**To**		**W-201**
10		P&ID No.		902-0017
11		Piping Material Class		1C1P
12		Pipe Schedule		40
13		Pipe Roughness (mm)		0.046
14		**Fluid**		**FG**
15	Calc Mode (L, Vu, Vd)			Vu
16	Temperature	: T	(C)	40.0
17	Pressure	: P	(kg/cm^2G)	3.50
18	Density	@ T,P	(kg/m^3)	
19	Molecular	@ T,P	(-)	43.80
20	Compress. Fact.	@ T,P	(-)	0.93
21	Viscosity	@ T,P	(cP)	0.01
22	C_P / C_V	@ T,P		1.16
23	M/B Flow Rate		(kg/h)	215
24	Excess Ratio		(-)	1.00
25	Flow Rate		(kg/h)	215
26	**Line Length**		(m)	**100**
27	**Pipe Nominal Size**		(inch)	**2**
28		**Calculation Result**		**OK**
29	Inlet Press.	(Input)	(kg/cm^2G)	3.50
30	Inlet Press.	(Calcul'd)	(kg/cm^2G)	**3.50**
31	Velocity	@ Inlet	(m/sec)	3.42
32	Reynolds No.	@ Inlet	(-)	160999.14
33	d*V*V/2g	@ Inlet	(kg/cm^2)	4.81
34	4*F*L/D	@ Inlet	(-)	39.71
35	dP/100m	@ Inlet	(kg/cm^2)	0.02
36	Outlet Press.	(Input)	(kg/cm^2G)	
37	Outlet Press.	(Calcul'd)	(kg/cm^2G)	**3.48**
38	**Velocity**	**@ Outlet**	**(m/sec)**	**3.43**
39			Limit	60.96
40	Sonic Velocity	@ Outlet	(m/sec)	252.75
41	Mach No.	@ Outlet	(-)	0.01
42	Reynolds No.	@ Outlet	(-)	160999.14
43	d*V*V/2g	@ Outlet	(kg/cm^2)	4.83
44	4*F*L/D	@ Outlet	(-)	39.71
45	**dP/100m**	**@ Outlet**	**(kg/cm^2)**	**0.019**
46			Limit	0.070
47	**Straight Pipe dP**		(kg/cm^2)	**0.019**
48	dP of Control Valve		(kg/cm^2)	
49	dP of Heat Exchanger		(kg/cm^2)	
50	dP of Column		(kg/cm^2)	
51	dP of Strainer		(kg/cm^2)	
52	dP of Orifice		(kg/cm^2)	
53	Other dP		(kg/cm^2)	
54	Static Head		(m)	
55			(kg/cm^2)	
56	**Equip dP**		(kg/cm^2)	
57	Pipe Entrance			
58	Pipe Exit			
59	90 Elbow			
60	Tee			
61	Globe Valve			
62	Gate Valve			
63	Check Valve			
64	Butterfly Valve			
65	Ball valve			
66	Contraction			
67	Enlargement			
68	Other's K			
69	**Sum (Ki)**			
70	**Fitting dP**		(kg/cm^2)	
71	**Total dP**		(kg/cm^2)	**0.019**
72	**Remarks**			
73				
74				**FLOWRATE BY**
75				**VENDOR**
76				
77				

PUMP HYDRAULIC CALCULATION SHEET

LOTTE E&C

REV	DATE	BY	CHK'D	APP'D
2	07-Mar-2024	J.H.JUNG	S.K.PARK	C.M.BAE
1	06-Feb-2023	J.H.JUNG	S.K.PARK	C.M.BAE
0	30-Jun-2022	J.H.JUNG	S.K.PARK	C.M.BAE
3	14-Jun-2024	J.H.JUNG	S.K.PARK	C.M.BAE

REVISION

1	PROJECT :	LINE PROJECT	JOB NO. :	15005
2	CLIENT :	PT LOTTE CHEMICAL INDONESIA	DOCU. NO. :	LINE-900-BC-4-0001
3	LOCATION :	CILEGON, INDONESIA	ITEM NO. :	**90-P-101A/B/C/D/E**
4	UNIT :	WP5	NO. REQUIRED :	5 (FIVE)
5	SERVICE :	**NAPHTHA FEED PUMPS**	SHEET :	1 OF 3

6	**FLUID**			
7	LIQUID PUMPED		NAPHTHA	
8	OPERATING TEMPERATURE	(℃)	22.7	AMB
9	VISCOSITY @ OP. TEMP.	(cP)	0.83	
10	VAPOR PRESS. @ OP. TEMP.	(kg/cm2A)	0.738	
11	SP. GR. @ OP. TEMP.	(-)	0.693	
12				
13	NORMAL CAPACITY (201 t/h)	(m3/hr)	290	
14	EXCESS RATIO	(%)	10	
15	RATED CAPACITY	(m3/hr)	319	
16	**SUCTION**			
17	PRESS. @ EQUIPMENT	(kg/cm2A) (kg/cm2G)	1.03	0.00
18	MIN. STATIC HEAD	(m)	2.2	(NOTE 2)
19	PIPE FRICTION	(kg/cm2)	0.037	
20	STRAINER	(kg/cm2)	0.07	
21		(kg/cm2)		
22		(kg/cm2)		
23				
24	NET SUC. PRESS.	(kg/cm2A) (kg/cm2G)	1.075	0.0
25	NPSH a @ Suction Nozzle Center	(m)	4.9	
26	**DISCHARGE**			
27	PRESS. @ EQUIP. or BL	(kg/cm2A) (kg/cm2G)	15.03	14.0
28	STATIC HEAD	(m)	4.7	
29	PIPE FRICTION	(kg/cm2)	0.310	
30	FE-1003/1004/1005/1006/1007	(kg/cm2)	0.2	
31	FE-1008	(kg/cm2)	0.2	
32	MARGIN	(kg/cm2)	1.6	
33		(kg/cm2)		
34		(kg/cm2)		
35		(kg/cm2)		
36		(kg/cm2)		
37				
38	TOTAL DISCH. PRESS.	(kg/cm2A) (kg/cm2G)	17.7	16.6
39	SUC. PRESS.	(kg/cm2A) (kg/cm2G)	1.1	0.0
40	DIFF. PRESS. (ΔP)	(kg/cm2)	16.6	
41	TOTAL HEAD (NET)	(m)	239	
42	TOTAL HEAD (TAKE)	(m)	239	
43	DIFF. PRESS. (ΔP) (TAKE)	(kg/cm2)	16.6	
44	TOTAL DISCH. PRESS. (TAKE)	(kg/cm2G)	16.6	
45				
46				
47				
48	**MAX SHUT OFF PRESSURE (NOTE 1)**			
49	MAX. SUC. STATIC HEAD	(m)	25.3	
50	SUC. EQUIP. DESIGN PRESS.	(kg/cm2G)	0.0	
51	MAX. SUC. PRESS.	(kg/cm2G)	1.7	
52	DIFF. PRESS. (ΔP) (TAKE)	(kg/cm2)	16.6	
53	SHUTOFF COEFF.	(%)	125	
54	MAX. SHUTOFF PRESS.	(kg/cm2G)	22.5	

SKETCH

CASE 1 : NAPHTHA FEED (GOVERNING)

2 OPERATION + 2 STANDBY + 1 MIXING , TYPE : HORIZONTAL CENT.

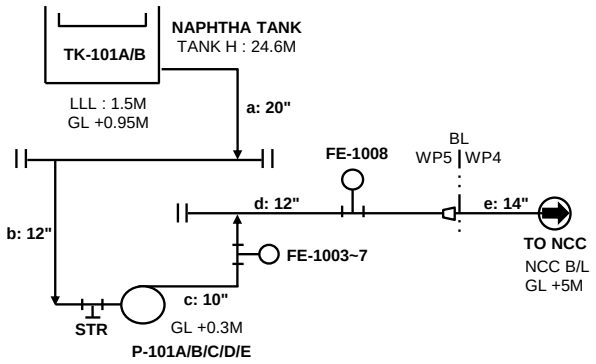

PIPE PRESSURE DROP

PIPING MATERIAL (C.S. or SUS.) : C.S. (3C1P)

		Suction		Discharge		
SECTION		**a**	**b**	**c**	**d**	**e**
FLOW RATE	(m^3/h)	957	319	319	638	638
PIPE ID	(in)	**20**	**12**	**10**	**12**	**14**
PIPE SCH.	(in)	STD	STD	40	40	40
PIPE ID	(mm)	488.95	304.80	254.51	303.22	333.35
ROUGHNESS	(mm)	0.046	0.046	0.046	0.046	0.046
VELOCITY	(m/s)	**1.416**	**1.214**	**1.742**	**2.454**	**2.031**
REYNOLDS NO.	(-)	577975	309056	370124	621333	565174
FRICTION FACTOR	(-)	0.004	0.004	0.004	0.004	0.004
ΔP / 100m	(kg/cm^2)	**0.020**	**0.027**	**0.066**	**0.103**	**0.064**
STRAIGHT LENGTH	(m)	102	13	46	38	353
NO. OF PIPE ENTRANCE						
NO. OF PIPE EXIT						
NO. OF 90 ELBOW		5				
NO. OF TEE		10				
NO. OF GLOBE VALVE						
NO. OF GATE VALVE		3	1	2	2	
NO. OF CHECK VALVE				1		
NO. OF BUTTER VALVE						
NO. OF BALL VALVE						
NO. OF CONTRACT						
NO. OF ENLARGER						
OTHER Ks						
PIPE ΔP	(kg/cm^2)	0.0209	0.0036	0.0302	0.0395	0.2261
FITTING ΔP	(kg/cm^2)	0.0119	0.0006	0.0098	0.0048	0.0000
TOTAL ΔP	(kg/cm^2)	**0.0328**	**0.0042**	**0.0400**	**0.0444**	**0.2261**

NOTES

1. Differential shut off pressure at max impeller size shall be lower than pump differential pressure X 1.25.
   Max suction pressure = Max suction static head + Suction equipment design pressure
2. LLL is considered for NPSHa.

: SELECTED DATA FOR PUMP DATASHEET

PUMP HYDRAULIC CALCULATION SHEET

LOTTE E&C

REV	DATE	BY	CHK'D	APP'D
2	07-Mar-2024	J.H.JUNG	S.K.PARK	C.M.BAE
1	06-Feb-2023	J.H.JUNG	S.K.PARK	C.M.BAE
0	30-Jun-2022	J.H.JUNG	S.K.PARK	C.M.BAE
3	14-Jun-2024	J.H.JUNG	S.K.PARK	C.M.BAE

REVISION

1	PROJECT :	LINE PROJECT	JOB NO. :	15005
2	CLIENT :	PT LOTTE CHEMICAL INDONESIA	DOCU. NO. :	LINE-900-BC-4-0001
3	LOCATION :	CILEGON, INDONESIA	ITEM NO. :	**90-P-101A/B/C/D/E**
4	UNIT :	WP5	NO. REQUIRED :	5 (FIVE)
5	SERVICE :	**NAPHTHA FEED PUMPS**	SHEET :	2 OF 3

6	**FLUID**			
7	LIQUID PUMPED		NAPHTHA	
8	OPERATING TEMPERATURE	(℃)	22.7	AMB
9	VISCOSITY @ OP. TEMP.	(cP)	0.83	
10	VAPOR PRESS. @ OP. TEMP.	(kg/cm2A)	0.738	
11	SP. GR. @ OP. TEMP.	(-)	0.693	
12				
13	NORMAL CAPACITY (201 t/h)	(m3/hr)	290	
14	EXCESS RATIO	(%)	10	
15	RATED CAPACITY	(m3/hr)	319	
16	**SUCTION**			
17	PRESS. @ EQUIPMENT	(kg/cm2A) (kg/cm2G)	1.03	0.00
18	MIN. STATIC HEAD	(m)	2.2	(NOTE 2)
19	PIPE FRICTION	(kg/cm2)	0.008	
20	STRAINER	(kg/cm2)	0.07	
21		(kg/cm2)		
22		(kg/cm2)		
23				
24	NET SUC. PRESS.	(kg/cm2A) (kg/cm2G)	1.104	0.1
25	NPSH a @ Suction Nozzle Center	(m)	5.3	
26	**DISCHARGE**			
27	PRESS. @ EQUIP. or BL	(kg/cm2A) (kg/cm2G)	1.03	0.00
28	STATIC HEAD	(m)	25.3	
29	PIPE FRICTION	(kg/cm2)	0.423	
30	FE-1003/1004/1005/1006/1007	(kg/cm2)	0.20	
31	FV-1003/1004/1005/1006/1007	(kg/cm2)	13.50	
32	JET NOZZLE TIP △P	(kg/cm2)	0.76	
33		(kg/cm2)		
34		(kg/cm2)		
35		(kg/cm2)		
36		(kg/cm2)		
37				
38	TOTAL DISCH. PRESS.	(kg/cm2A) (kg/cm2G)	17.7	16.6
39	SUC. PRESS.	(kg/cm2A) (kg/cm2G)	1.1	0.1
40	DIFF. PRESS. (ΔP)	(kg/cm2)	16.6	
41	TOTAL HEAD (NET)	(m)	239	
42	TOTAL HEAD (TAKE)	(m)		
43	DIFF. PRESS. (ΔP) (TAKE)	(kg/cm2)		
44	TOTAL DISCH. PRESS. (TAKE)	(kg/cm2G)		
45				
46				
47				
48	**MAX SHUT OFF PRESSURE (NOTE 1)**			
49	MAX. SUC. STATIC HEAD	(m)		
50	SUC. EQUIP. DESIGN PRESS.	(kg/cm2G)		
51	MAX. SUC. PRESS.	(kg/cm2G)		
52	DIFF. PRESS. (ΔP) (TAKE)	(kg/cm2)		
53	SHUTOFF COEFF.	(%)		
54	MAX. SHUTOFF PRESS.	(kg/cm2G)		

SKETCH

CASE 2 : NAPHTHA MIXING

2 OPERATION + 2 STANDBY + 1 MIXING , TYPE : HORIZONTAL CENT.

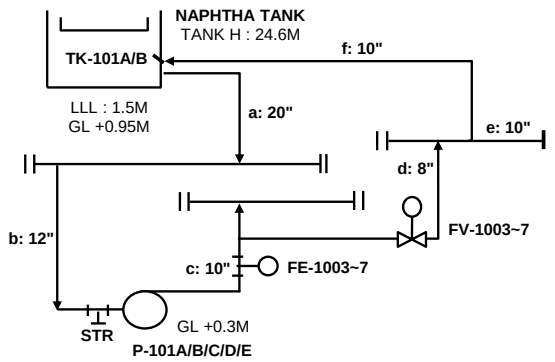

PIPE PRESSURE DROP

PIPING MATERIAL (C.S. or SUS.) : C.S. (3C1P)

		Suction		Discharge			
SECTION		**a**	**b**	**c**	**d**	**e**	**f**
FLOW RATE	(m^3/h)	319	319	319	319	319	319
PIPE ID	(in)	**20**	**12**	**10**	**8**	**10**	**10**
PIPE SCH.	(in)	STD	STD	40	40	40	40
PIPE ID	(mm)	488.95	304.80	254.51	202.72	254.51	254.51
ROUGHNESS	(mm)	0.046	0.046	0.046	0.046	0.046	0.046
VELOCITY	(m/s)	**0.472**	**1.215**	**1.742**	**2.746**	**1.742**	**1.742**
REYNOLDS NO.	(-)	192687	309102	370180	464751	370180	370180
FRICTION FACTOR	(-)	0.004	0.004	0.004	0.004	0.004	0.004
ΔP / 100m	(kg/cm^2)	**0.003**	**0.027**	**0.066**	**0.207**	**0.066**	**0.066**
STRAIGHT LENGTH	(m)	102	13	46	129	50	100
NO. OF PIPE ENTRANCE							
NO. OF PIPE EXIT							
NO. OF 90 ELBOW		5					
NO. OF TEE		10					
NO. OF GLOBE VALVE							
NO. OF GATE VALVE		3	1	2	2		2
NO. OF CHECK VALVE				1			1
NO. OF BUTTER VALVE							
NO. OF BALL VALVE							
NO. OF CONTRACT							
NO. OF ENLARGER							
OTHER Ks							
PIPE ΔP	(kg/cm^2)	0.0027	0.0036	0.0302	0.2676	0.0331	0.0663
FITTING ΔP	(kg/cm^2)	0.0015	0.0006	0.0098	0.0064	0.0000	0.0098
TOTAL ΔP	(kg/cm^2)	**0.0042**	**0.0042**	**0.0400**	**0.2740**	**0.0331**	**0.0761**

NOTES

1. Differential shut off pressure at max impeller size shall be lower than pump differential pressure X 1.25.
   Max suction pressure = Max suction static head + Suction equipment design pressure
2. LLL is considered for NPSHa.

PUMP HYDRAULIC CALCULATION SHEET

LOTTE E&C

REV	DATE	BY	CHK'D	APP'D
2	07-Mar-2024	J.H.JUNG	S.K.PARK	C.M.BAE
1	06-Feb-2023	J.H.JUNG	S.K.PARK	C.M.BAE
0	30-Jun-2022	J.H.JUNG	S.K.PARK	C.M.BAE
3	14-Jun-2024	J.H.JUNG	S.K.PARK	C.M.BAE

REVISION

1	PROJECT :	LINE PROJECT	JOB NO. :	15005
2	CLIENT :	PT LOTTE CHEMICAL INDONESIA	DOCU. NO. :	LINE-900-BC-4-0001
3	LOCATION :	CILEGON, INDONESIA	ITEM NO. :	**90-P-101A/B/C/D/E**
4	UNIT :	WP5	NO. REQUIRED :	5 (FIVE)
5	SERVICE :	**NAPHTHA FEED PUMPS**	SHEET :	3 OF 3

6	**FLUID**			
7	LIQUID PUMPED		NAPHTHA	
8	OPERATING TEMPERATURE	(℃)	22.7	AMB
9	VISCOSITY @ OP. TEMP.	(cP)	0.83	
10	VAPOR PRESS. @ OP. TEMP.	(kg/cm2A)	0.738	
11	SP. GR. @ OP. TEMP.	(-)	0.693	
12				
13	NORMAL CAPACITY (201 t/h)	(m3/hr)	290	
14	EXCESS RATIO	(%)	10	
15	RATED CAPACITY	(m3/hr)	319	
16	**SUCTION**			
17	PRESS. @ EQUIPMENT	(kg/cm2A) (kg/cm2G)	1.03	0.00
18	MIN. STATIC HEAD	(m)	2.2	(NOTE 2)
19	PIPE FRICTION	(kg/cm2)	0.016	
20	STRAINER	(kg/cm2)	0.07	
21		(kg/cm2)		
22		(kg/cm2)		
23				
24	NET SUC. PRESS.	(kg/cm2A) (kg/cm2G)	1.096	0.1
25	NPSH a @ Suction Nozzle Center	(m)	5.2	
26	**DISCHARGE**			
27	PRESS. @ EQUIP. or BL	(kg/cm2A) (kg/cm2G)	1.03	0.00
28	STATIC HEAD	(m)	25.3	
29	PIPE FRICTION	(kg/cm2)	0.498	
30	FE-1003/1004/1005/1006/1007	(kg/cm2)	0.20	
31	FV-1003/1004/1005/1006/1007	(kg/cm2)	12.58	
32	JET NOZZLE TIP △P	(kg/cm2)	3.05	
33		(kg/cm2)		
34		(kg/cm2)		
35		(kg/cm2)		
36		(kg/cm2)		
37				
38	TOTAL DISCH. PRESS.	(kg/cm2A) (kg/cm2G)	19.1	18.1
39	SUC. PRESS.	(kg/cm2A) (kg/cm2G)	1.1	0.1
40	DIFF. PRESS. (ΔP)	(kg/cm2)	18.0	
41	TOTAL HEAD (NET)	(m)	260	
42	TOTAL HEAD (TAKE)	(m)		
43	DIFF. PRESS. (ΔP) (TAKE)	(kg/cm2)		
44	TOTAL DISCH. PRESS. (TAKE)	(kg/cm2G)		
45				
46				
47				
48	**MAX SHUT OFF PRESSURE (NOTE 1)**			
49	MAX. SUC. STATIC HEAD	(m)		
50	SUC. EQUIP. DESIGN PRESS.	(kg/cm2G)		
51	MAX. SUC. PRESS.	(kg/cm2G)		
52	DIFF. PRESS. (ΔP) (TAKE)	(kg/cm2)		
53	SHUTOFF COEFF.	(%)		
54	MAX. SHUTOFF PRESS.	(kg/cm2G)		

SKETCH

CASE 3 : MINIMUM FLOW

2 OPERATION + 2 STANDBY + 1 MIXING , TYPE : HORIZONTAL CENT.

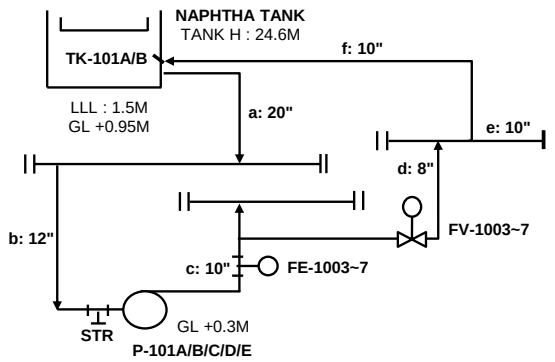

PIPE PRESSURE DROP

PIPING MATERIAL (C.S. or SUS.) : C.S. (3C1P)

		Suction		Discharge			
SECTION		**a**	**b**	**c**	**d**	**e**	**f**
FLOW RATE	(m^3/h)	639	160	160	160	639	639
PIPE ID	(in)	**20**	**12**	**10**	**8**	**10**	**10**
PIPE SCH.	(in)	STD	STD	40	40	40	40
PIPE ID	(mm)	488.95	304.80	254.51	202.72	254.51	254.51
ROUGHNESS	(mm)	0.046	0.046	0.046	0.046	0.046	0.046
VELOCITY	(m/s)	**0.945**	**0.609**	**0.874**	**1.377**	**3.489**	**3.489**
REYNOLDS NO.	(-)	385921	155013	185642	233069	741409	741409
FRICTION FACTOR	(-)	0.004	0.004	0.004	0.004	0.004	0.004
ΔP / 100m	(kg/cm^2)	**0.010**	**0.008**	**0.018**	**0.056**	**0.249**	**0.249**
STRAIGHT LENGTH	(m)	102	13	46	129	50	100
NO. OF PIPE ENTRANCE							
NO. OF PIPE EXIT							
NO. OF 90 ELBOW		5					
NO. OF TEE		10					
NO. OF GLOBE VALVE							
NO. OF GATE VALVE		3	1	2	2		2
NO. OF CHECK VALVE				1			1
NO. OF BUTTER VALVE							
NO. OF BALL VALVE							
NO. OF CONTRACT							
NO. OF ENLARGER							
OTHER Ks							
PIPE ΔP	(kg/cm^2)	0.0098	0.0010	0.0083	0.0723	0.1247	0.2495
FITTING ΔP	(kg/cm^2)	0.0055	0.0001	0.0025	0.0016	0.0000	0.0394
TOTAL ΔP	(kg/cm^2)	**0.0152**	**0.0011**	**0.0108**	**0.0739**	**0.1247**	**0.2889**

NOTES

1. Differential shut off pressure at max impeller size shall be lower than pump differential pressure X 1.25.
   Max suction pressure = Max suction static head + Suction equipment design pressure
2. LLL is considered for NPSHa.

PUMP HYDRAULIC CALCULATION SHEET

LOTTE E&C

REV	DATE	BY	CHK'D	APP'D
2	07-Mar-2024	J.H.JUNG	S.K.PARK	C.M.BAE
1	06-Feb-2023	J.H.JUNG	S.K.PARK	C.M.BAE
0	30-Jun-2022	J.H.JUNG	S.K.PARK	C.M.BAE
3	14-Jun-2024	J.H.JUNG	S.K.PARK	C.M.BAE

REVISION

1	PROJECT :	LINE PROJECT	JOB NO. :	15005
2	CLIENT :	PT LOTTE CHEMICAL INDONESIA	DOCU. NO. :	LINE-900-BC-4-0001
3	LOCATION :	CILEGON, INDONESIA	ITEM NO. :	**90-P-121A/B**
4	UNIT :	WP5	NO. REQUIRED :	2 (TWO)
5	SERVICE :	**NAPHTHA TRANSFER PUMPS**	SHEET :	1 OF 3

6	**FLUID**			
7	LIQUID PUMPED		NAPHTHA	
8	OPERATING TEMPERATURE	(℃)	22.7	AMB
9	VISCOSITY @ OP. TEMP.	(cP)	0.83	
10	VAPOR PRESS. @ OP. TEMP.	(kg/cm2A)	0.738	
11	SP. GR. @ OP. TEMP.	(-)	0.693	
12				
13	NORMAL CAPACITY (568 t/h)	(m3/hr)	820	
14	EXCESS RATIO	(%)	10	
15	RATED CAPACITY	(m3/hr)	902	
16	**SUCTION**			
17	PRESS. @ EQUIPMENT	(kg/cm2A) (kg/cm2G)	1.03	0.00
18	MIN. STATIC HEAD	(m)	2.2	(NOTE 2)
19	PIPE FRICTION	(kg/cm2)	0.092	
20	STRAINER	(kg/cm2)	0.07	
21		(kg/cm2)		
22		(kg/cm2)		
23				
24	NET SUC. PRESS.	(kg/cm2A) (kg/cm2G)	1.020	0.0
25	NPSH a @ Suction Nozzle Center	(m)	4.1	
26	**DISCHARGE**			
27	PRESS. @ EQUIP. or BL	(kg/cm2A) (kg/cm2G)	1.03	0.00
28	STATIC HEAD	(m)	25.3	
29	PIPE FRICTION	(kg/cm2)	0.450	
30	FE-1001/1002	(kg/cm2)	0.25	
31	FE-1009/1010	(kg/cm2)	0.25	
32		(kg/cm2)		
33		(kg/cm2)		
34		(kg/cm2)		
35		(kg/cm2)		
36		(kg/cm2)		
37				
38	TOTAL DISCH. PRESS.	(kg/cm2A) (kg/cm2G)	3.7	2.7
39	SUC. PRESS.	(kg/cm2A) (kg/cm2G)	1.0	0.0
40	DIFF. PRESS. (ΔP)	(kg/cm2)	2.7	
41	TOTAL HEAD (NET)	(m)	39	
42	TOTAL HEAD (TAKE)	(m)		
43	DIFF. PRESS. (ΔP) (TAKE)	(kg/cm2)		
44	TOTAL DISCH. PRESS. (TAKE)	(kg/cm2G)		
45				
46				
47				
48	**MAX SHUT OFF PRESSURE (NOTE 1)**			
49	MAX. SUC. STATIC HEAD	(m)		
50	SUC. EQUIP. DESIGN PRESS.	(kg/cm2G)		
51	MAX. SUC. PRESS.	(kg/cm2G)		
52	DIFF. PRESS. (ΔP) (TAKE)	(kg/cm2)		
53	SHUTOFF COEFF.	(%)		
54	MAX. SHUTOFF PRESS.	(kg/cm2G)		

SKETCH

CASE 1 : NAPHTHA TRANSFER CASE

1 OPERATION + 1 STANDBY , TYPE : HORIZONTAL CENT.

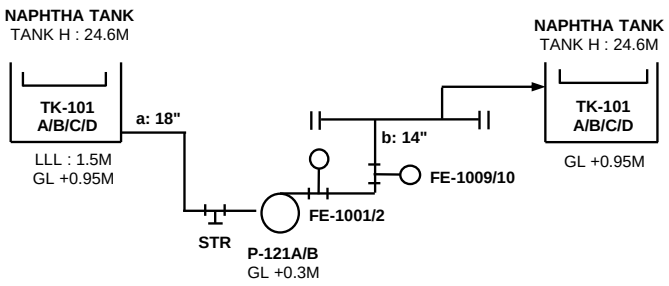

PIPE PRESSURE DROP

PIPING MATERIAL (C.S. or SUS.) : C.S. (1C1P)

		Suction		Discharge			
SECTION		**a**		**b**			
FLOW RATE	(m^3/h)	902		902			
PIPE ID	(in)	**18**		**14**			
PIPE SCH.	(in)	STD		STD			
PIPE ID	(mm)	438.15		336.55			
ROUGHNESS	(mm)	0.046		0.046			
VELOCITY	(m/s)	**1.662**		**2.817**			
REYNOLDS NO.	(-)	607919		791441			
FRICTION FACTOR	(-)	0.004		0.004			
ΔP / 100m	(kg/cm^2)	**0.032**		**0.118**			
STRAIGHT LENGTH	(m)	225		337			
NO. OF PIPE ENTRANCE							
NO. OF PIPE EXIT							
NO. OF 90 ELBOW		8					
NO. OF TEE		4					
NO. OF GLOBE VALVE							
NO. OF GATE VALVE		4		5			
NO. OF CHECK VALVE				2			
NO. OF BUTTER VALVE							
NO. OF BALL VALVE							
NO. OF CONTRACT							
NO. OF ENLARGER							
OTHER Ks							
PIPE ΔP	(kg/cm^2)	0.0710		0.3986			
FITTING ΔP	(kg/cm^2)	0.0209		0.0515			
TOTAL ΔP	(kg/cm^2)	**0.0919**		**0.4501**			

NOTES

1. Differential shut off pressure at max impeller size shall be lower than pump differential pressure X 1.25.
   Max suction pressure = Max suction static head + Suction equipment design pressure
2. LLL is considered for NPSHa.

PUMP HYDRAULIC CALCULATION SHEET

LOTTE E&C

REV	DATE	BY	CHK'D	APP'D
2	07-Mar-2024	J.H.JUNG	S.K.PARK	C.M.BAE
1	06-Feb-2023	J.H.JUNG	S.K.PARK	C.M.BAE
0	30-Jun-2022	J.H.JUNG	S.K.PARK	C.M.BAE
3	14-Jun-2024	J.H.JUNG	S.K.PARK	C.M.BAE

REVISION

1	PROJECT	:	LINE PROJECT	JOB NO. : 15005
2	CLIENT	:	PT LOTTE CHEMICAL INDONESIA	DOCU. NO. : LINE-900-BC-4-0001
3	LOCATION	:	CILEGON, INDONESIA	ITEM NO. : **90-P-121A/B**
4	UNIT	:	WP5	NO. REQUIRED : 2 (TWO)
5	SERVICE	:	**NAPHTHA TRANSFER PUMPS**	SHEET : 2 OF 3

6	**FLUID**			
7	LIQUID PUMPED		NAPHTHA	
8	OPERATING TEMPERATURE	(℃)	22.7	AMB
9	VISCOSITY @ OP. TEMP.	(cP)	0.83	
10	VAPOR PRESS. @ OP. TEMP.	(kg/cm2A)	0.738	
11	SP. GR. @ OP. TEMP.	(-)	0.693	
12				
13	NORMAL CAPACITY (568 t/h)	(m3/hr)	820	
14	EXCESS RATIO	(%)	10	
15	RATED CAPACITY	(m3/hr)	902	
16	**SUCTION**			
17	PRESS. @ EQUIPMENT	(kg/cm2A) (kg/cm2G)	1.03	0.00
18	MIN. STATIC HEAD	(m)	2.2	(NOTE 2)
19	PIPE FRICTION	(kg/cm2)	0.092	
20	STRAINER	(kg/cm2)	0.07	
21		(kg/cm2)		
22		(kg/cm2)		
23				
24	NET SUC. PRESS.	(kg/cm2A) (kg/cm2G)	1.020	0.0
25	NPSH a @ Suction Nozzle Center	(m)	4.1	
26	**DISCHARGE**			
27	PRESS. @ EQUIP. or BL	(kg/cm2A) (kg/cm2G)	1.03	0.00
28	STATIC HEAD	(m)	25.3	
29	PIPE FRICTION	(kg/cm2)	0.383	
30	FE-1001/1002	(kg/cm2)	0.25	
31	FV-1001/1002	(kg/cm2)	2.10	
32	JET NOZZLE TIP △P	(kg/cm2)	0.91	
33		(kg/cm2)		
34		(kg/cm2)		
35		(kg/cm2)		
36		(kg/cm2)		
37				
38	TOTAL DISCH. PRESS.	(kg/cm2A) (kg/cm2G)	6.4	5.4
39	SUC. PRESS.	(kg/cm2A) (kg/cm2G)	1.0	0.0
40	DIFF. PRESS. (ΔP)	(kg/cm2)	5.4	
41	TOTAL HEAD (NET)	(m)	78	
42	TOTAL HEAD (TAKE)	(m)	78	
43	DIFF. PRESS. (ΔP) (TAKE)	(kg/cm2)	5.4	
44	TOTAL DISCH. PRESS. (TAKE)	(kg/cm2G)	5.4	
45				
46				
47				
48	**MAX SHUT OFF PRESSURE (NOTE 1)**			
49	MAX. SUC. STATIC HEAD	(m)	25.3	
50	SUC. EQUIP. DESIGN PRESS.	(kg/cm2G)	0.0	
51	MAX. SUC. PRESS.	(kg/cm2G)	1.7	
52	DIFF. PRESS. (ΔP) (TAKE)	(kg/cm2)	5.4	
53	SHUTOFF COEFF.	(%)	125	
54	MAX. SHUTOFF PRESS.	(kg/cm2G)	8.5	

SKETCH

CASE 2 : NAPHTHA MIXING CASE (GOVERNING)

1 OPERATION + 1 STANDBY , TYPE : HORIZONTAL CENT.

*MIXING THROUGH PUMP MINIMUM FLOW LINE

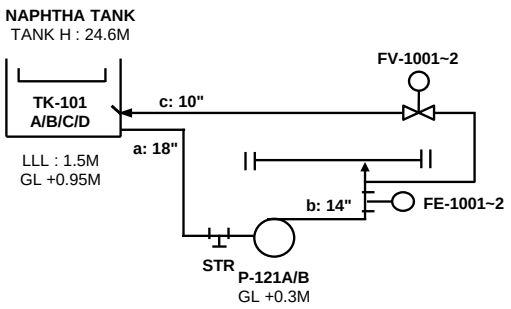

PIPE PRESSURE DROP

PIPING MATERIAL (C.S. or SUS.) : C.S. (1C1P)

		Suction		Discharge			
SECTION		**a**		**b**	**c**		
FLOW RATE	(m^3/h)	902		902	350		
PIPE ID	(in)	**18**		**14**	**10**		
PIPE SCH.	(in)	STD		STD	40		
PIPE ID	(mm)	438.15		336.55	254.51		
ROUGHNESS	(mm)	0.046		0.046	0.046		
VELOCITY	**(m/s)**	**1.662**		**2.817**	**1.911**		
REYNOLDS NO.	(-)	607919		791441	406092		
FRICTION FACTOR	(-)	0.004		0.004	0.004		
ΔP / 100m	(kg/cm^2)	**0.032**		**0.118**	**0.079**		
STRAIGHT LENGTH	(m)	225		68	337		
NO. OF PIPE ENTRANCE							
NO. OF PIPE EXIT							
NO. OF 90 ELBOW		8					
NO. OF TEE		4					
NO. OF GLOBE VALVE							
NO. OF GATE VALVE		4		1	4		
NO. OF CHECK VALVE				1	1		
NO. OF BUTTER VALVE							
NO. OF BALL VALVE							
NO. OF CONTRACT							
NO. OF ENLARGER							
OTHER Ks							
PIPE ΔP	(kg/cm^2)	0.0710		0.0809	0.2662		
FITTING ΔP	(kg/cm^2)	0.0209		0.0211	0.0148		
TOTAL ΔP	(kg/cm^2)	**0.0919**		**0.1019**	**0.2811**		

NOTES

1. Differential shut off pressure at max impeller size shall be lower than pump differential pressure X 1.25.
   Max suction pressure = Max suction static head + Suction equipment design pressure
2. LLL is considered for NPSHa.

: SELECTED DATA FOR PUMP DATASHEET

PUMP HYDRAULIC CALCULATION SHEET

LOTTE E&C

REV	DATE	BY	CHK'D	APP'D
2	07-Mar-2024	J.H.JUNG	S.K.PARK	C.M.BAE
1	06-Feb-2023	J.H.JUNG	S.K.PARK	C.M.BAE
0	30-Jun-2022	J.H.JUNG	S.K.PARK	C.M.BAE
3	14-Jun-2024	J.H.JUNG	S.K.PARK	C.M.BAE

REVISION

1	PROJECT :	LINE PROJECT	JOB NO. :	15005
2	CLIENT :	PT LOTTE CHEMICAL INDONESIA	DOCU. NO. :	LINE-900-BC-4-0001
3	LOCATION :	CILEGON, INDONESIA	ITEM NO. :	**90-P-121A/B**
4	UNIT :	WP5	NO. REQUIRED :	2 (TWO)
5	SERVICE :	**NAPHTHA TRANSFER PUMPS**	SHEET :	3 OF 3

	FLUID		
7	LIQUID PUMPED		NAPHTHA
8	OPERATING TEMPERATURE	(℃)	22.7 AMB
9	VISCOSITY @ OP. TEMP.	(cP)	0.83
10	VAPOR PRESS. @ OP. TEMP.	(kg/cm2A)	0.738
11	SP. GR. @ OP. TEMP.	(-)	0.693
12			
13	NORMAL CAPACITY	(m3/hr)	
14	EXCESS RATIO	(%)	
15	RATED CAPACITY	(m3/hr)	350
16	**SUCTION**		
17	PRESS. @ EQUIPMENT	(kg/cm2A) (kg/cm2G)	
18	MIN. STATIC HEAD	(m)	
19	PIPE FRICTION	(kg/cm2)	
20		(kg/cm2)	
21		(kg/cm2)	
22		(kg/cm2)	
23			
24	NET SUC. PRESS.	(kg/cm2A) (kg/cm2G)	
25	NPSH a @ Suction Nozzle Center	(m)	
26	**DISCHARGE**		
27	PRESS. @ EQUIP. or BL	(kg/cm2A) (kg/cm2G)	
28	STATIC HEAD	(m)	
29	PIPE FRICTION	(kg/cm2)	
30		(kg/cm2)	
31		(kg/cm2)	
32		(kg/cm2)	
33		(kg/cm2)	
34		(kg/cm2)	
35		(kg/cm2)	
36		(kg/cm2)	
37			
38	TOTAL DISCH. PRESS.	(kg/cm2A) (kg/cm2G)	
39	SUC. PRESS.	(kg/cm2A) (kg/cm2G)	
40	DIFF. PRESS. (ΔP)	(kg/cm2)	
41	TOTAL HEAD (NET)	(m)	
42	TOTAL HEAD (TAKE)	(m)	
43	DIFF. PRESS. (ΔP) (TAKE)	(kg/cm2)	
44	TOTAL DISCH. PRESS. (TAKE)	(kg/cm2G)	
45			
46			
47			
48	**MAX SHUT OFF PRESSURE (NOTE 1)**		
49	MAX. SUC. STATIC HEAD	(m)	
50	SUC. EQUIP. DESIGN PRESS.	(kg/cm2G)	
51	MAX. SUC. PRESS.	(kg/cm2G)	
52	DIFF. PRESS. (ΔP) (TAKE)	(kg/cm2)	
53	SHUTOFF COEFF.	(%)	
54	MAX. SHUTOFF PRESS.	(kg/cm2G)	

SKETCH

PUMP MINIMUM FLOW LINE

1 OPERATION + 1 STANDBY , TYPE : HORIZONTAL CENT.

MINIMUM FLOWRATE IS ASSUMED AS VENDOR DATA.

PUMP MINIMUM FLOWRATE =	350	m3/hr	
PUMP DISCH. P. AS PER CURVE =	6.2	kg/cm2g	(1)
SUCTION EQUIPMENT PRESS. =	0.00	kg/cm2g	(2)
SUCTION EQUIPMENT HEAD =	25.3	m	
	1.75	kg/cm2	(3)
PIPE FRICTION =	0.28	kg/cm2	(4)
FE-1001,1002 DEL P =	0.25	kg/cm2	(5)
JET NOZZLE TIP DEL P =	0.80	kg/cm2	(6)
OTHERS DEL P =		kg/cm2	(7)
FV-1001,1002 DEL P =	**3.1**	**kg/cm2**	(8)

(8) = (1) - (2) - (3) - (4) - (5) - (6) - (7)

PIPE PRESSURE DROP

PIPING MATERIAL (C.S. or SUS.) : C.S. (3L1P)

		Suction		Discharge			
SECTION				**a**	**b**		
FLOW RATE	(m^3/h)			350	350		
PIPE ID	(in)			**14**	**10**		
PIPE SCH.	(in)			STD	40		
PIPE ID	(mm)			336.55	254.51		
ROUGHNESS	(mm)			0.046	0.046		
VELOCITY	(m/s)			**1.093**	**1.911**		
REYNOLDS NO.	(-)			307100	406092		
FRICTION FACTOR	(-)			0.004	0.004		
ΔP / 100m	(kg/cm^2)			**0.020**	**0.079**		
STRAIGHT LENGTH	(m)			68	337		
NO. OF PIPE ENTRANCE							
NO. OF PIPE EXIT							
NO. OF 90 ELBOW							
NO. OF TEE							
NO. OF GLOBE VALVE							
NO. OF GATE VALVE							
NO. OF CHECK VALVE							
NO. OF BUTTER VALVE							
NO. OF BALL VALVE							
NO. OF CONTRACT							
NO. OF ENLARGER							
OTHER Ks							
PIPE ΔP	(kg/cm^2)			0.0135	0.2662		
FITTING ΔP	(kg/cm^2)			0.0000	0.0000		
TOTAL ΔP	(kg/cm^2)			**0.0135**	**0.2662**		

NOTES

1. Differential shut off pressure at max impeller size shall be lower than pump differential pressure X 1.25.
   Max suction pressure = Max suction static head + Suction equipment design pressure

PUMP HYDRAULIC CALCULATION SHEET

LOTTE E&C

REV	DATE	BY	CHK'D	APP'D
2	07-Mar-2024	J.H.JUNG	S.K.PARK	C.M.BAE
1	06-Feb-2023	J.H.JUNG	S.K.PARK	C.M.BAE
0	30-Jun-2022	J.H.JUNG	S.K.PARK	C.M.BAE
3	14-Jun-2024	J.H.JUNG	S.K.PARK	C.M.BAE

REVISION

1	PROJECT :	LINE PROJECT	JOB NO. :	15005
2	CLIENT :	PT LOTTE CHEMICAL INDONESIA	DOCU. NO. :	LINE-900-BC-4-0001
3	LOCATION :	CILEGON, INDONESIA	ITEM NO. :	**90-P-141A/B**
4	UNIT :	WP5	NO. REQUIRED :	2 (TWO)
5	SERVICE :	**NAPHTHA DRAIN PUMPS**	SHEET :	1 OF 1

6	**FLUID**			
7	LIQUID PUMPED		NAPHTHA	
8	OPERATING TEMPERATURE	(℃)	22.7	AMB
9	VISCOSITY @ OP. TEMP.	(cP)	0.83	
10	VAPOR PRESS. @ OP. TEMP.	(kg/cm2A)	0.738	
11	SP. GR. @ OP. TEMP.	(-)	0.693	
12				
13	NORMAL CAPACITY	(m3/hr)	-	
14	EXCESS RATIO	(%)	-	
15	RATED CAPACITY	(m3/hr)	10	
16	**SUCTION**			
17	PRESS. @ EQUIPMENT	(kg/cm2A) (kg/cm2G)	1.04	0.01
18	MIN. STATIC HEAD	(m)	0.5	(NOTE 4)
19	PIPE FRICTION	(kg/cm2)	0.000	
20	STRAINER	(kg/cm2)	0.04	assumed
21		(kg/cm2)		
22		(kg/cm2)		
23				
24	NET SUC. PRESS.	(kg/cm2A) (kg/cm2G)	1.039	0.01
25	NPSH a @ Suction Nozzle Center	(m)	4.3	
26	**DISCHARGE**			
27	PRESS. @ EQUIP. or BL	(kg/cm2A) (kg/cm2G)	1.03	0.0
28	STATIC HEAD	(m)	25.6	
29	PIPE FRICTION	(kg/cm2)	1.022	
30	MARGIN	(kg/cm2)	0.35	
31		(kg/cm2)		
32		(kg/cm2)		
33		(kg/cm2)		
34		(kg/cm2)		
35		(kg/cm2)		
36		(kg/cm2)		
37				
38	TOTAL DISCH. PRESS.	(kg/cm2A) (kg/cm2G)	4.2	3.1
39	SUC. PRESS.	(kg/cm2A) (kg/cm2G)	1.0	0.0
40	DIFF. PRESS. (ΔP)	(kg/cm2)	3.1	
41	TOTAL HEAD (NET)	(m)	45	
42	TOTAL HEAD (TAKE)	(m)	45	(NOTE 2)
43	DIFF. PRESS. (ΔP) (TAKE)	(kg/cm2)	3.1	
44	TOTAL DISCH. PRESS. (TAKE)	(kg/cm2G)	3.1	(NOTE 3)
45				
46				
47				
48	**MAX SHUT OFF PRESSURE (NOTE 1)**			
49	MAX. SUC. STATIC HEAD	(m)	2.5	
50	SUC. EQUIP. DESIGN PRESS.	(kg/cm2G)	3.5	
51	MAX. SUC. PRESS.	(kg/cm2G)	3.7	
52	DIFF. PRESS. (ΔP) (TAKE)	(kg/cm2)	3.1	
53	SHUTOFF COEFF.	(%)	125	
54	MAX. SHUTOFF PRESS. (NOTE 2)	(kg/cm2G)	7.6	10.0

SKETCH

CASE : DRAIN TRANSFER TO NAPHTHA TANK

1 OPERATION + 1 COMMON WAREHOUSE SPARE, TYPE : VERTICAL SUMP

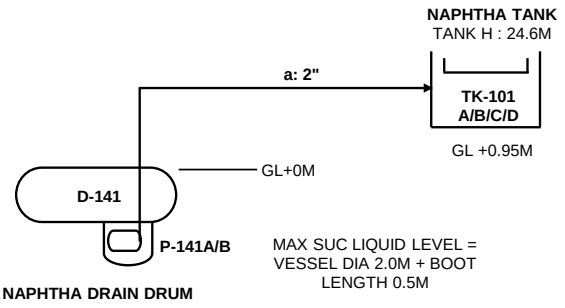

* P-141B IS WAREHOUSE SPARE

PIPE PRESSURE DROP

PIPING MATERIAL (C.S. or SUS.) : C.S. (1C1P)

		Suction		Discharge			
SECTION				a			
FLOW RATE	(m^3/h)			10			
PIPE ID	(in)			2			
PIPE SCH.	(in)			40			
PIPE ID	(mm)			52.50			
ROUGHNESS	(mm)			0.046			
VELOCITY	(m/s)			**1.283**			
REYNOLDS NO.	(-)			56247			
FRICTION FACTOR	(-)			0.006			
ΔP / 100m	(kg/cm^2)			**0.258**			
STRAIGHT LENGTH	(m)			396			
NO. OF PIPE ENTRANCE							
NO. OF PIPE EXIT							
NO. OF 90 ELBOW							
NO. OF TEE							
NO. OF GLOBE VALVE							
NO. OF GATE VALVE							
NO. OF CHECK VALVE							
NO. OF BUTTER VALVE							
NO. OF BALL VALVE							
NO. OF CONTRACT							
NO. OF ENLARGER							
OTHER Ks							
PIPE ΔP	(kg/cm^2)			1.0222			
FITTING ΔP	(kg/cm^2)			0.0000			
TOTAL ΔP	(kg/cm^2)			**1.0222**			

NOTES

1. Differential shut off pressure at max impeller size shall be lower than pump differential pressure X 1.25.
   Max suction pressure = Max suction static head + Suction equipment design pressure
2. Pump head and pump shut off pressure is maximum value among drain pumps, because naphtha drain pump B is used for common spare.
3. Discharge pressure at the outlet nozzle (grade).
4. LLL is considered for NPSHa.

: SELECTED DATA FOR PUMP DATASHEET

PUMP HYDRAULIC CALCULATION SHEET

LOTTE E&C

REV	DATE	BY	CHK'D	APP'D
2	07-Mar-2024	J.H.JUNG	S.K.PARK	C.M.BAE
1	06-Feb-2023	J.H.JUNG	S.K.PARK	C.M.BAE
0	30-Jun-2022	J.H.JUNG	S.K.PARK	C.M.BAE
3	14-Jun-2024	J.H.JUNG	S.K.PARK	C.M.BAE

REVISION

1	PROJECT :	LINE PROJECT	JOB NO. :	15005
2	CLIENT :	PT LOTTE CHEMICAL INDONESIA	DOCU. NO. :	LINE-900-BC-4-0001
3	LOCATION :	CILEGON, INDONESIA	ITEM NO. :	**90-P-150A/B**
4	UNIT :	WP5	NO. REQUIRED :	2 (TWO)
5	SERVICE :	**OWS PUMPS FOR NAPHTHA TANK AREA**	SHEET :	1 OF 1

	FLUID			
7	LIQUID PUMPED		OILY WATER	
8	OPERATING TEMPERATURE	(℃)	22.7	AMB
9	VISCOSITY @ OP. TEMP.	(cP)	0.89	
10	VAPOR PRESS. @ OP. TEMP.	(kg/cm2A)	0.032	
11	SP. GR. @ OP. TEMP.	(-)	0.997	
12				
13	NORMAL CAPACITY (300 t/h)	(m3/hr)	-	
14	EXCESS RATIO	(%)	-	
15	RATED CAPACITY	(m3/hr)	40	
16	**SUCTION**			
17	PRESS. @ EQUIPMENT	(kg/cm2A) (kg/cm2G)	1.03	0.00
18	MIN. STATIC HEAD	(m)	0.5	(NOTE 3)
19	PIPE FRICTION	(kg/cm2)	0.000	
20	STRAINER	(kg/cm2)	0.05	assumed
21		(kg/cm2)		
22		(kg/cm2)		
23				
24	NET SUC. PRESS.	(kg/cm2A) (kg/cm2G)	1.033	0.0
25	NPSH a @Suction Nozzle Center	(m)	10.0	
26	**DISCHARGE**			
27	PRESS. @ EQUIP. or BL	(kg/cm2A) (kg/cm2G)	1.03	0.00
28	STATIC HEAD	(m)	13.5	
29	PIPE FRICTION	(kg/cm2)	1.244	
30	FT-1150	(kg/cm2)	0.2	
31	MARGIN	(kg/cm2)	0.7	
32		(kg/cm2)		
33		(kg/cm2)		
34		(kg/cm2)		
35		(kg/cm2)		
36		(kg/cm2)		
37				
38	TOTAL DISCH. PRESS.	(kg/cm2A) (kg/cm2G)	4.5	3.5
39	SUC. PRESS.	(kg/cm2A) (kg/cm2G)	1.0	0.0
40	DIFF. PRESS. (ΔP)	(kg/cm2)	3.5	
41	TOTAL HEAD (NET)	(m)	35	
42	TOTAL HEAD (TAKE)	(m)	35	
43	DIFF. PRESS. (ΔP) (TAKE)	(kg/cm2)	3.5	
44	TOTAL DISCH. PRESS. (TAKE)	(kg/cm2G)	3.5	(NOTE 2)
45				
46				
47				
48	**MAX SHUT OFF PRESSURE (NOTE 1)**			
49	MAX. SUC. STATIC HEAD	(m)	3.5	
50	SUC. EQUIP. DESIGN PRESS.	(kg/cm2G)	3.5	
51	MAX. SUC. PRESS.	(kg/cm2G)	3.8	
52	DIFF. PRESS. (ΔP) (TAKE)	(kg/cm2)	3.5	
53	SHUTOFF COEFF.	(%)	125	
54	MAX. SHUTOFF PRESS.	(kg/cm2G)	8.2	

SKETCH

CASE : OWS TRANSFER TO OWS TANK

1 OPERATION + 1 COMMON WAREHOUSE SPARE, TYPE : VERTICAL SUMP (VS4)

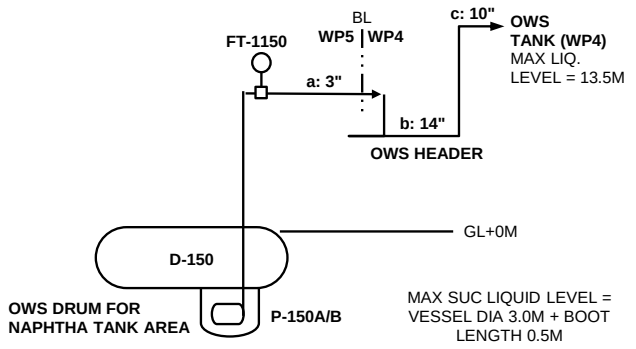

* P-150B IS WAREHOUSE SPARE

PIPE PRESSURE DROP

PIPING MATERIAL (C.S. or SUS.) : C.S. (1C1W)

		Suction		Discharge			
SECTION				**a**	**b**	**c**	
FLOW RATE	(m^3/h)			40	600	600	
PIPE ID	(in)			3	14	10	
PIPE SCH.	(in)			40	STD	40	
PIPE ID	(mm)			77.93	336.55	254.51	
ROUGHNESS	(mm)			0.046	0.046	0.046	
VELOCITY	(m/s)			**2.329**	**1.874**	**3.276**	
REYNOLDS NO.	(-)			203361	706339	934024	
FRICTION FACTOR	(-)			0.005	0.004	0.004	
ΔP / 100m	(kg/cm^2)			**0.681**	**0.076**	**0.311**	
STRAIGHT LENGTH	(m)			50	984	50	
NO. OF PIPE ENTRANCE							
NO. OF PIPE EXIT							
NO. OF 90 ELBOW							
NO. OF TEE							
NO. OF GLOBE VALVE							
NO. OF GATE VALVE							
NO. OF CHECK VALVE							
NO. OF BUTTER VALVE							
NO. OF BALL VALVE							
NO. OF CONTRACT							
NO. OF ENLARGER							
OTHER Ks							
PIPE ΔP	(kg/cm^2)			0.3405	0.7478	0.1557	
FITTING ΔP	(kg/cm^2)			0.0000	0.0000	0.0000	
TOTAL ΔP	(kg/cm^2)			**0.3405**	**0.7478**	**0.1557**	

NOTES

1. Differential shut off pressure at max impeller size shall be lower than pump differential pressure X 1.25.
   Max suction pressure = Max suction static head + Suction equipment design pressure
2. Discharge pressure at the outlet nozzle (grade).
3. LLL is considered for NPSHa.

: SELECTED DATA FOR PUMP DATASHEET

PUMP HYDRAULIC CALCULATION SHEET

LOTTE E&C

REV	DATE	BY	CHK'D	APP'D
2	07-Mar-2024	J.H.JUNG	S.K.PARK	C.M.BAE
1	06-Feb-2023	J.H.JUNG	S.K.PARK	C.M.BAE
0	30-Jun-2022	J.H.JUNG	S.K.PARK	C.M.BAE
3	14-Jun-2024	J.H.JUNG	S.K.PARK	C.M.BAE

REVISION

1	PROJECT :	LINE PROJECT	JOB NO. :	15005
2	CLIENT :	PT LOTTE CHEMICAL INDONESIA	DOCU. NO. :	LINE-900-BC-4-0001
3	LOCATION :	CILEGON, INDONESIA	ITEM NO. :	**90-P-201A/B/C**
4	UNIT :	WP5	NO. REQUIRED :	3 (THREE)
5	SERVICE :	**C3 LPG FEED PUMPS**	SHEET :	1 OF 2

	FLUID			
7	LIQUID PUMPED		C3 LPG	
8	OPERATING TEMPERATURE	(℃)	-43.6	
9	VISCOSITY @ OP. TEMP.	(cP)	0.202	
10	VAPOR PRESS. @ OP. TEMP.	(kg/cm2A)	1.08	
11	SP. GR. @ OP. TEMP.	(-)	0.582	
12				
13	NORMAL CAPACITY (115 t/h)	(m3/hr)	198	
14	EXCESS RATIO	(%)	10	
15	RATED CAPACITY	(m3/hr)	217	
16	**SUCTION**			
17	PRESS. @ EQUIPMENT (kg/cm2A)	(kg/cm2G)	1.08	0.05
18	MIN. STATIC HEAD	(m)	0.9	
19	PIPE FRICTION	(kg/cm2)	0.000	
20		(kg/cm2)		
21		(kg/cm2)		
22		(kg/cm2)		
23				
24	NET SUC. PRESS. (kg/cm2A)	(kg/cm2G)	1.131	0.10
25	NPSH a @ Suction Nozzle Center	(m)	0.9	
26	**DISCHARGE**			
27	PRESS. @ EQUIP. or BL (kg/cm2A)	(kg/cm2G)	15.03	14.0
28	STATIC HEAD	(m)	5.0	(NCC BL)
29	PIPE FRICTION	(kg/cm2)	3.859	
30	FE-2001	(kg/cm2)	0.38	
31	E-201	(kg/cm2)	0.70	
32	FE-2003	(kg/cm2)	0.25	
33	STATIC HEAD (E-201 INLET)	(kg/cm2)	0.56	
34	STATIC HEAD (E-201 OUTLET)	(kg/cm2)	-0.48	
35	MARGIN	(kg/cm2)	0.40	
36		(kg/cm2)		
37				
38	TOTAL DISCH. PRESS. (kg/cm2A)	(kg/cm2G)	21.0	19.9
39	SUC. PRESS. (kg/cm2A)	(kg/cm2G)	1.1	0.1
40	DIFF. PRESS. (ΔP)	(kg/cm2)	19.8	
41	TOTAL HEAD (NET)	(m)	341	
42	TOTAL HEAD (TAKE)	(m)	341	
43	DIFF. PRESS. (ΔP) (TAKE)	(kg/cm2)	19.8	
44	TOTAL DISCH. PRESS. (TAKE)	(kg/cm2G)	19.9	(NOTE 2)
45				
46				
47				
48	**MAX SHUT OFF PRESSURE (NOTE 1)**			
49	MAX. SUC. STATIC HEAD	(m)	33.5	
50	SUC. EQUIP. DESIGN PRESS.	(kg/cm2G)	0.15	
51	MAX. SUC. PRESS.	(kg/cm2G)	2.1	
52	DIFF. PRESS. (ΔP) (TAKE)	(kg/cm2)	19.8	
53	SHUTOFF COEFF.	(%)	125	
54	MAX. SHUTOFF PRESS.	(kg/cm2G)	26.9	(NOTE 3)

SKETCH

CASE : C3 LPG FEED TO NCC

2 OPERATION + 1 STANDBY, TYPE : VERTICAL SUBMERGED

* PUMP CAPA. = 115 T/H * 2EA
* NCC REQUIRED = 170 T/H
* HEX 180 T/H BY LCI
* PUMP HYD. AS PUMP CAPA.

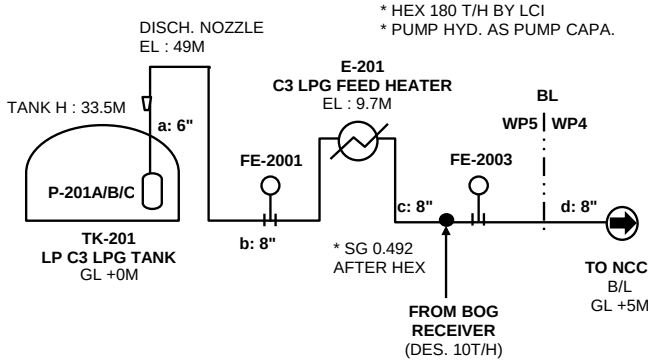

PIPE PRESSURE DROP

PIPING MATERIAL (C.S. or SUS.) : C.S. (3L1P)

SECTION		Suction		Discharge a	Discharge b	Discharge c	Discharge d
FLOW RATE	(m^3/h)			217	435	488	488
PIPE ID	(in)			6	8	8	8
PIPE SCH.	(in)			40	40	40	40
PIPE ID	(mm)			154.05	202.72	202.72	202.72
ROUGHNESS	(mm)			0.046	0.046	0.046	0.046
VELOCITY	(m/s)			3.239	3.741	4.198	4.198
REYNOLDS NO.	(-)			1437752	2185139	4272629	4272629
FRICTION FACTOR	(-)			0.004	0.004	0.004	0.004
ΔP / 100m	(kg/cm^2)			0.312	0.297	0.312	0.312
STRAIGHT LENGTH	(m)			18	203	118	870
NO. OF PIPE ENTRANCE							
NO. OF PIPE EXIT							
NO. OF 90 ELBOW							
NO. OF TEE							
NO. OF GLOBE VALVE							
NO. OF GATE VALVE				1	2	3	
NO. OF CHECK VALVE				1	1	1	
NO. OF BUTTER VALVE							
NO. OF BALL VALVE							
NO. OF CONTRACT							
NO. OF ENLARGER							
OTHER Ks							
PIPE ΔP	(kg/cm^2)			0.0562	0.6048	0.3670	2.7163
FITTING ΔP	(kg/cm^2)			0.0273	0.0396	0.0475	0.0000
TOTAL ΔP	(kg/cm^2)			0.0835	0.6444	0.4145	2.7163

NOTES

1. Differential shut off pressure at max impeller size shall be lower than pump differential pressure X 1.25.
   Max suction pressure = Max suction static head + Suction equipment design pressure
2. Discharge pressure at the pump impeller.
3. Downstream design pressure is applied as 28.1 kg/cm2g.

: SELECTED DATA FOR PUMP DATASHEET

PUMP HYDRAULIC CALCULATION SHEET

LOTTE E&C

REV	DATE	BY	CHK'D	APP'D
2	07-Mar-2024	J.H.JUNG	S.K.PARK	C.M.BAE
1	06-Feb-2023	J.H.JUNG	S.K.PARK	C.M.BAE
0	30-Jun-2022	J.H.JUNG	S.K.PARK	C.M.BAE
3	14-Jun-2024	J.H.JUNG	S.K.PARK	C.M.BAE

REVISION

PROJECT	:	LINE PROJECT	JOB NO. :	15005
CLIENT	:	PT LOTTE CHEMICAL INDONESIA	DOCU. NO. :	LINE-900-BC-4-0001
LOCATION	:	CILEGON, INDONESIA	ITEM NO. :	**90-P-201A/B/C**
UNIT	:	WP5	NO. REQUIRED :	3 (THREE)
SERVICE	:	**C3 LPG FEED PUMPS**	SHEET :	2 OF 2

FLUID

LIQUID PUMPED		C3 LPG
OPERATING TEMPERATURE	(℃)	-43.6
VISCOSITY @ OP. TEMP.	(cP)	0.202
VAPOR PRESS. @ OP. TEMP.	(kg/cm2A)	1.08
SP. GR. @ OP. TEMP.	(-)	0.582
NORMAL CAPACITY (115 t/h)	(m3/hr)	198
EXCESS RATIO	(%)	10
RATED CAPACITY	(m3/hr)	217

SUCTION

PRESS. @ EQUIPMENT (kg/cm2A)	(kg/cm2G)	
MIN. STATIC HEAD	(m)	
PIPE FRICTION	(kg/cm2)	
	(kg/cm2)	
	(kg/cm2)	
	(kg/cm2)	
NET SUC. PRESS. (kg/cm2A)	(kg/cm2G)	
NPSH a @ Suction Nozzle Center	(m)	

DISCHARGE

PRESS. @ EQUIP. or BL (kg/cm2A)	(kg/cm2G)	
STATIC HEAD	(m)	
PIPE FRICTION	(kg/cm2)	
	(kg/cm2)	
	(kg/cm2)	
	(kg/cm2)	
	(kg/cm2)	
	(kg/cm2)	
	(kg/cm2)	
TOTAL DISCH. PRESS. (kg/cm2A)	(kg/cm2G)	
SUC. PRESS. (kg/cm2A)	(kg/cm2G)	
DIFF. PRESS. (ΔP)	(kg/cm2)	
TOTAL HEAD (NET)	(m)	
TOTAL HEAD (TAKE)	(m)	
DIFF. PRESS. (ΔP) (TAKE)	(kg/cm2)	
TOTAL DISCH. PRESS. (TAKE)	(kg/cm2G)	

MAX SHUT OFF PRESSURE (NOTE 1)

MAX. SUC. STATIC HEAD	(m)	
SUC. EQUIP. DESIGN PRESS.	(kg/cm2G)	
MAX. SUC. PRESS.	(kg/cm2G)	
DIFF. PRESS. (ΔP) (TAKE)	(kg/cm2)	
SHUTOFF COEFF.	(%)	
MAX. SHUTOFF PRESS.	(kg/cm2G)	

SKETCH

PUMP MINIMUM FLOW LINE

2 OPERATION + 1 STANDBY, TYPE : VERTICAL SUBMERGED

MINIMUM FLOWRATE IS VENDOR DATA.

PUMP MINIMUM FLOWRATE =	150	m3/hr	
PUMP DISCH. P. AS PER CURVE =	24.5	kg/cm2g	(1)
SUCTION EQUIPMENT PRESS. =	0.05	kg/cm2g	(2)
SUCTION EQUIPMENT HEAD =	49.0	m	(NOTE 2)
	2.85	kg/cm2	(3)
PIPE FRICTION =	0.08	kg/cm2	(4)
FE-2001 DEL P =	0.38	kg/cm2	(5)
OTHERS DEL P =		kg/cm2	(6)
OTHERS DEL P =		kg/cm2	(7)
FV-2001 DEL P =	**21.2**	**kg/cm2**	(8)

(8) = (1) - (2) - (3) - (4) - (5) - (6) - (7)

PIPE PRESSURE DROP

PIPING MATERIAL (C.S. or SUS.) : C.S. (3L1P)

		Suction		Discharge			
SECTION				**a**			
FLOW RATE	(m^3/h)			150			
PIPE ID	(in)			**6**			
PIPE SCH.	(in)			40			
PIPE ID	(mm)			154.05			
ROUGHNESS	(mm)			0.046			
VELOCITY	(m/s)			**2.235**			
REYNOLDS NO.	(-)			992220			
FRICTION FACTOR	(-)			0.004			
ΔP / 100m	(kg/cm^2)			**0.151**			
STRAIGHT LENGTH	(m)			50			
NO. OF PIPE ENTRANCE							
NO. OF PIPE EXIT							
NO. OF 90 ELBOW							
NO. OF TEE							
NO. OF GLOBE VALVE							
NO. OF GATE VALVE							
NO. OF CHECK VALVE							
NO. OF BUTTER VALVE							
NO. OF BALL VALVE							
NO. OF CONTRACT							
NO. OF ENLARGER							
OTHER Ks							
PIPE ΔP	(kg/cm^2)			0.0753			
FITTING ΔP	(kg/cm^2)			0.0000			
TOTAL ΔP	(kg/cm^2)			**0.0753**			

NOTES

1. Differential shut off pressure at max impeller size shall be lower than pump differential pressure X 1.25.
   Max suction pressure = Max suction static head + Suction equipment design pressure
2. Same as pump discharge nozzle elevation.

PUMP HYDRAULIC CALCULATION SHEET

LOTTE E&C

REV	DATE	BY	CHK'D	APP'D
2	07-Mar-2024	J.H.JUNG	S.K.PARK	C.M.BAE
1	06-Feb-2023	J.H.JUNG	S.K.PARK	C.M.BAE
0	30-Jun-2022	J.H.JUNG	S.K.PARK	C.M.BAE
3	14-Jun-2024	J.H.JUNG	S.K.PARK	C.M.BAE

REVISION

1	PROJECT :	LINE PROJECT	JOB NO. :	15005
2	CLIENT :	PT LOTTE CHEMICAL INDONESIA	DOCU. NO. :	LINE-900-BC-4-0001
3	LOCATION :	CILEGON, INDONESIA	ITEM NO. :	**90-P-202A/B**
4	UNIT :	WP5	NO. REQUIRED :	2 (TWO)
5	SERVICE :	**C3 LPG FUEL PUMPS**	SHEET :	1 OF 3

	FLUID			
7	LIQUID PUMPED		C3 LPG	
8	OPERATING TEMPERATURE	(℃)	-43.6	
9	VISCOSITY @ OP. TEMP.	(cP)	0.202	
10	VAPOR PRESS. @ OP. TEMP.	(kg/cm2A)	1.08	
11	SP. GR. @ OP. TEMP.	(-)	0.582	
12				
13	NORMAL CAPACITY (20 t/h)	(m3/hr)	34	
14	EXCESS RATIO	(%)	10	
15	RATED CAPACITY	(m3/hr)	38	
16	**SUCTION**			
17	PRESS. @ EQUIPMENT	(kg/cm2A) (kg/cm2G)	1.08	0.05
18	MIN. STATIC HEAD	(m)	0.9	
19	PIPE FRICTION	(kg/cm2)	0.000	
20		(kg/cm2)		
21		(kg/cm2)		
22		(kg/cm2)		
23				
24	NET SUC. PRESS.	(kg/cm2A) (kg/cm2G)	1.131	0.10
25	NPSH a @ Suction Nozzle Center	(m)	0.9	
26	**DISCHARGE**			
27	PRESS. @ EQUIP. or BL	(kg/cm2A) (kg/cm2G)	36.03	35.0
28	STATIC HEAD	(m)	5.0	
29	PIPE FRICTION	(kg/cm2)	0.940	
30	FE-2002	(kg/cm2)	0.20	
31	E-221	(kg/cm2)	0.70	
32	PV-2005	(kg/cm2)	1.05	
33	STATIC HEAD (E-221 INLET)	(kg/cm2)	0.56	
34	STATIC HEAD (E-221 OUTLET)	(kg/cm2)	-0.47	
35		(kg/cm2)		
36		(kg/cm2)		
37				
38	TOTAL DISCH. PRESS.	(kg/cm2A) (kg/cm2G)	39.3	38.2
39	SUC. PRESS.	(kg/cm2A) (kg/cm2G)	1.1	0.1
40	DIFF. PRESS. (ΔP)	(kg/cm2)	38.1	
41	TOTAL HEAD (NET)	(m)	655	
42	TOTAL HEAD (TAKE)	(m)	655	
43	DIFF. PRESS. (ΔP) (TAKE)	(kg/cm2)	38.1	
44	TOTAL DISCH. PRESS. (TAKE)	(kg/cm2G)	38.2	(NOTE 2)
45				
46				
47				
48	**MAX SHUT OFF PRESSURE (NOTE 1)**			
49	MAX. SUC. STATIC HEAD	(m)	33.5	
50	SUC. EQUIP. DESIGN PRESS.	(kg/cm2G)	0.15	
51	MAX. SUC. PRESS.	(kg/cm2G)	2.1	
52	DIFF. PRESS. (ΔP) (TAKE)	(kg/cm2)	41.7	
53	SHUTOFF COEFF.	(%)		
54	MAX. SHUTOFF PRESS.	(kg/cm2G)	43.8	(NOTE 3)

SKETCH

CASE 1 : C3 LPG FUEL TO NCC GTG FUEL DRUM, DURING NORMAL OPERATION (GOVERNING)

1 OPERATION + 1 STANDBY, TYPE : VERTICAL SUBMERGED

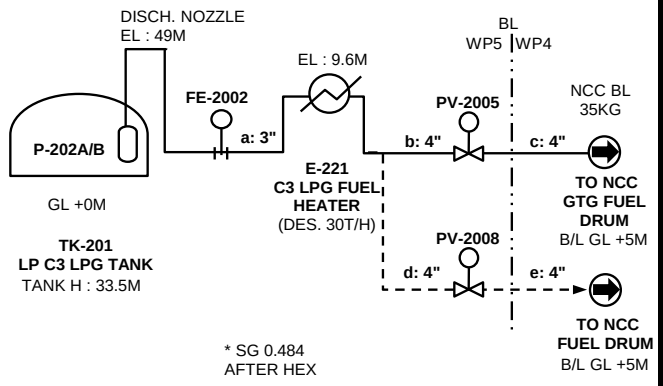

PIPE PRESSURE DROP

PIPING MATERIAL (C.S. or SUS.) : C.S. (3L1P)

		Suction		Discharge		
SECTION				**a**	**b**	**c**
FLOW RATE	(m^3/h)			38	23	23
PIPE ID	(in)			3	4	4
PIPE SCH.	(in)			40	40	40
PIPE ID	(mm)			77.93	102.26	102.26
ROUGHNESS	(mm)			0.046	0.046	0.046
VELOCITY	(m/s)			**2.201**	**0.768**	**0.768**
REYNOLDS NO.	(-)			494280	418073	418073
FRICTION FACTOR	(-)			0.005	0.004	0.004
ΔP / 100m	(kg/cm^2)			**0.336**	**0.025**	**0.025**
STRAIGHT LENGTH	(m)			203	125	786
NO. OF PIPE ENTRANCE						
NO. OF PIPE EXIT						
NO. OF 90 ELBOW						
NO. OF TEE						
NO. OF GLOBE VALVE						
NO. OF GATE VALVE				2	2	2
NO. OF CHECK VALVE				2		
NO. OF BUTTER VALVE						
NO. OF BALL VALVE						
NO. OF CONTRACT						
NO. OF ENLARGER						
OTHER Ks						
PIPE ΔP	(kg/cm^2)			0.6833	0.0311	0.1961
FITTING ΔP	(kg/cm^2)			0.0288	0.0004	0.0004
TOTAL ΔP	(kg/cm^2)			**0.7120**	**0.0315**	**0.1965**

NOTES

1. Differential shut off pressure at max impeller size shall be lower than pump differential pressure X 1.25.
   Max suction pressure = Max suction static head + Suction equipment design pressure
   For this pump, Max shut off pressure is calculated as below;
   Differential shut off pressure = vendor shut off head (717m)
2. Discharge pressure at the pump impeller.
3. Downstream design pressure is applied as 46.5 kg/cm2g.

: SELECTED DATA FOR PUMP DATASHEET

PUMP HYDRAULIC CALCULATION SHEET

LOTTE E&C

REV	DATE	BY	CHK'D	APP'D
2	07-Mar-2024	J.H.JUNG	S.K.PARK	C.M.BAE
1	06-Feb-2023	J.H.JUNG	S.K.PARK	C.M.BAE
0	30-Jun-2022	J.H.JUNG	S.K.PARK	C.M.BAE
3	14-Jun-2024	J.H.JUNG	S.K.PARK	C.M.BAE

REVISION

1	PROJECT :	LINE PROJECT	JOB NO. :	15005
2	CLIENT :	PT LOTTE CHEMICAL INDONESIA	DOCU. NO. :	LINE-900-BC-4-0001
3	LOCATION :	CILEGON, INDONESIA	ITEM NO. :	**90-P-202A/B**
4	UNIT :	WP5	NO. REQUIRED :	2 (TWO)
5	SERVICE :	**C3 LPG FUEL PUMPS**	SHEET :	2 OF 3

	FLUID			
7	LIQUID PUMPED		C3 LPG	
8	OPERATING TEMPERATURE	(℃)	-43.6	
9	VISCOSITY @ OP. TEMP.	(cP)	0.202	
10	VAPOR PRESS. @ OP. TEMP.	(kg/cm2A)	1.08	
11	SP. GR. @ OP. TEMP.	(-)	0.582	
12				
13	NORMAL CAPACITY (20 t/h)	(m3/hr)	34	
14	EXCESS RATIO	(%)	10	
15	RATED CAPACITY	(m3/hr)	38	
16	**SUCTION**			
17	PRESS. @ EQUIPMENT	(kg/cm2A) (kg/cm2G)	1.08	0.05
18	MIN. STATIC HEAD	(m)	0.9	
19	PIPE FRICTION	(kg/cm2)	0.000	
20		(kg/cm2)		
21		(kg/cm2)		
22		(kg/cm2)		
23				
24	NET SUC. PRESS.	(kg/cm2A) (kg/cm2G)	1.131	0.10
25	NPSH a @ Suction Nozzle Center	(m)	0.9	
26	**DISCHARGE**			
27	PRESS. @ EQUIP. or BL	(kg/cm2A) (kg/cm2G)	26.03	25.0
28	STATIC HEAD	(m)	5.0	
29	PIPE FRICTION	(kg/cm2)	1.596	
30	FE-2002	(kg/cm2)	0.2	
31	E-221	(kg/cm2)	0.7	
32	PV-2008	(kg/cm2)	10.40	
33	STATIC PRESSURE FOR SECTION a	(kg/cm2)	0.56	
34	STATIC PRESSURE FOR SECTION d	(kg/cm2)	-0.47	
35		(kg/cm2)		
36		(kg/cm2)		
37				
38	TOTAL DISCH. PRESS.	(kg/cm2A) (kg/cm2G)	39.3	38.2
39	SUC. PRESS.	(kg/cm2A) (kg/cm2G)	1.1	0.1
40	DIFF. PRESS. (ΔP)	(kg/cm2)	38.1	
41	TOTAL HEAD (NET)	(m)	655	
42	TOTAL HEAD (TAKE)	(m)		
43	DIFF. PRESS. (ΔP) (TAKE)	(kg/cm2)		
44	TOTAL DISCH. PRESS. (TAKE)	(kg/cm2G)		
45				
46				
47				
48	**MAX SHUT OFF PRESSURE (NOTE 1)**			
49	MAX. SUC. STATIC HEAD	(m)		
50	SUC. EQUIP. DESIGN PRESS.	(kg/cm2G)		
51	MAX. SUC. PRESS.	(kg/cm2G)		
52	DIFF. PRESS. (ΔP) (TAKE)	(kg/cm2)		
53	SHUTOFF COEFF.	(%)		
54	MAX. SHUTOFF PRESS.	(kg/cm2G)		

SKETCH

CASE 2 : C3 LPG FUEL TO NCC FUEL DRUM, DURING START UP

1 OPERATION + 1 STANDBY, TYPE : VERTICAL SUBMERGED

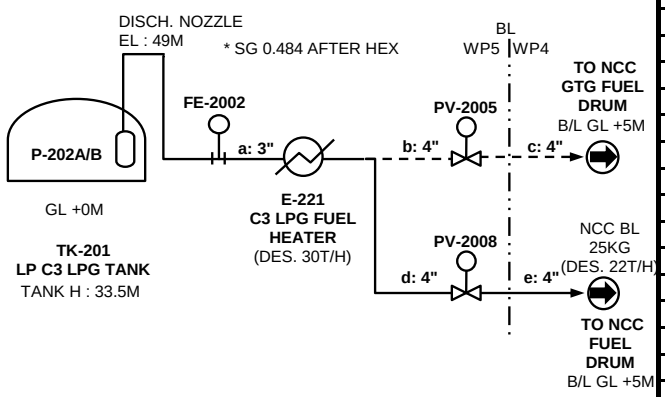

PIPE PRESSURE DROP

PIPING MATERIAL (C.S. or SUS.) : C.S. (3L1P)

		Suction		Discharge		
SECTION				**a**	**d**	**e**
FLOW RATE	(m^3/h)			38	45	45
PIPE ID	(in)			3	4	4
PIPE SCH.	(in)			40	40	40
PIPE ID	(mm)			77.93	102.26	102.26
ROUGHNESS	(mm)			0.046	0.046	0.046
VELOCITY	(m/s)			**2.204**	**1.536**	**1.536**
REYNOLDS NO.	(-)			494794	836146	836146
FRICTION FACTOR	(-)			0.005	0.004	0.004
ΔP / 100m	(kg/cm^2)			**0.337**	**0.097**	**0.097**
STRAIGHT LENGTH	(m)			203	125	786
NO. OF PIPE ENTRANCE						
NO. OF PIPE EXIT						
NO. OF 90 ELBOW						
NO. OF TEE						
NO. OF GLOBE VALVE						
NO. OF GATE VALVE				2	2	2
NO. OF CHECK VALVE				2		
NO. OF BUTTER VALVE						
NO. OF BALL VALVE						
NO. OF CONTRACT						
NO. OF ENLARGER						
OTHER Ks						
PIPE ΔP	(kg/cm^2)			0.6847	0.1205	0.7591
FITTING ΔP	(kg/cm^2)			0.0288	0.0016	0.0016
TOTAL ΔP	(kg/cm^2)			**0.7135**	**0.1221**	**0.7607**

NOTES

1. Differential shut off pressure at max impeller size shall be lower than pump differential pressure X 1.25.
   Max suction pressure = Max suction static head + Suction equipment design pressure
2. Discharge pressure at the pump impeller.

PUMP HYDRAULIC CALCULATION SHEET

LOTTE E&C

REV	DATE	BY	CHK'D	APP'D
2	07-Mar-2024	J.H.JUNG	S.K.PARK	C.M.BAE
1	06-Feb-2023	J.H.JUNG	S.K.PARK	C.M.BAE
0	30-Jun-2022	J.H.JUNG	S.K.PARK	C.M.BAE
3	14-Jun-2024	J.H.JUNG	S.K.PARK	C.M.BAE

REVISION

1	PROJECT :	LINE PROJECT	JOB NO. :	15005
2	CLIENT :	PT LOTTE CHEMICAL INDONESIA	DOCU. NO. :	LINE-900-BC-4-0001
3	LOCATION :	CILEGON, INDONESIA	ITEM NO. :	**90-P-202A/B**
4	UNIT :	WP5	NO. REQUIRED :	2 (TWO)
5	SERVICE :	**C3 LPG FUEL PUMPS**	SHEET :	3 OF 3

FLUID

7	LIQUID PUMPED		C3 LPG
8	OPERATING TEMPERATURE	(℃)	-43.6
9	VISCOSITY @ OP. TEMP.	(cP)	0.202
10	VAPOR PRESS. @ OP. TEMP.	(kg/cm2A)	1.08
11	SP. GR. @ OP. TEMP.	(-)	0.582
12			
13	NORMAL CAPACITY (20 t/h)	(m3/hr)	34
14	EXCESS RATIO	(%)	10
15	RATED CAPACITY	(m3/hr)	38

SUCTION

17	PRESS. @ EQUIPMENT	(kg/cm2A) (kg/cm2G)	
18	MIN. STATIC HEAD	(m)	
19	PIPE FRICTION	(kg/cm2)	
20		(kg/cm2)	
21		(kg/cm2)	
22		(kg/cm2)	
23			
24	NET SUC. PRESS.	(kg/cm2A) (kg/cm2G)	
25	NPSH a @ Suction Nozzle Center	(m)	

DISCHARGE

27	PRESS. @ EQUIP. or BL	(kg/cm2A) (kg/cm2G)	
28	STATIC HEAD	(m)	
29	PIPE FRICTION	(kg/cm2)	
30		(kg/cm2)	
31		(kg/cm2)	
32		(kg/cm2)	
33		(kg/cm2)	
34		(kg/cm2)	
35		(kg/cm2)	
36		(kg/cm2)	
37			
38	TOTAL DISCH. PRESS.	(kg/cm2A) (kg/cm2G)	
39	SUC. PRESS.	(kg/cm2A) (kg/cm2G)	
40	DIFF. PRESS. (ΔP)	(kg/cm2)	
41	TOTAL HEAD (NET)	(m)	
42	TOTAL HEAD (TAKE)	(m)	
43	DIFF. PRESS. (ΔP) (TAKE)	(kg/cm2)	
44	TOTAL DISCH. PRESS. (TAKE)	(kg/cm2G)	
45			
46			
47			

MAX SHUT OFF PRESSURE (NOTE 1)

49	MAX. SUC. STATIC HEAD	(m)	
50	SUC. EQUIP. DESIGN PRESS.	(kg/cm2G)	
51	MAX. SUC. PRESS.	(kg/cm2G)	
52	DIFF. PRESS. (ΔP) (TAKE)	(kg/cm2)	
53	SHUTOFF COEFF.	(%)	
54	MAX. SHUTOFF PRESS.	(kg/cm2G)	

SKETCH

PUMP MINIMUM FLOW LINE

1 OPERATION + 1 STANDBY, TYPE : VERTICAL SUBMERGED

MINIMUM FLOWRATE IS VENDOR DATA.

PUMP MINIMUM FLOWRATE =	15	m3/hr	
PUMP DISCH. P. AS PER CURVE =	41.9	kg/cm2g	(1)
SUCTION EQUIPMENT PRESS. =	0.05	kg/cm2g	(2)
SUCTION EQUIPMENT HEAD =	49.0	m	(NOTE 2)
	2.85	kg/cm2	(3)
PIPE FRICTION =	0.21	kg/cm2	(4)
FE-2002 DEL P =	0.20	kg/cm2	(5)
OTHERS DEL P =		kg/cm2	(6)
OTHERS DEL P =		kg/cm2	(7)
FV-2002 DEL P =	**38.6**	**kg/cm2**	(8)

(8) = (1) - (2) - (3) - (4) - (5) - (6) - (7)

PIPE PRESSURE DROP

PIPING MATERIAL (C.S. or SUS.) : C.S. (3L1P)

		Suction		Discharge			
SECTION				**a**			
FLOW RATE	(m^3/h)			15			
PIPE ID	(in)			2			
PIPE SCH.	(in)			40			
PIPE ID	(mm)			52.50			
ROUGHNESS	(mm)			0.046			
VELOCITY	(m/s)			**1.925**			
REYNOLDS NO.	(-)			291146			
FRICTION FACTOR	(-)			0.005			
ΔP / 100m	(kg/cm^2)			**0.421**			
STRAIGHT LENGTH	(m)			50			
NO. OF PIPE ENTRANCE							
NO. OF PIPE EXIT							
NO. OF 90 ELBOW							
NO. OF TEE							
NO. OF GLOBE VALVE							
NO. OF GATE VALVE							
NO. OF CHECK VALVE							
NO. OF BUTTER VALVE							
NO. OF BALL VALVE							
NO. OF CONTRACT							
NO. OF ENLARGER							
OTHER Ks							
PIPE ΔP	(kg/cm^2)			0.2104			
FITTING ΔP	(kg/cm^2)			0.0000			
TOTAL ΔP	(kg/cm^2)			**0.2104**			

NOTES

1. Differential shut off pressure at max impeller size shall be lower than pump differential pressure X 1.25.
   Max suction pressure = Max suction static head + Suction equipment design pressure
2. Same as pump discharge nozzle elevation.

PUMP HYDRAULIC CALCULATION SHEET

LOTTE E&C

REV	DATE	BY	CHK'D	APP'D
2	07-Mar-2024	J.H.JUNG	S.K.PARK	C.M.BAE
1	06-Feb-2023	J.H.JUNG	S.K.PARK	C.M.BAE
0	30-Jun-2022	J.H.JUNG	S.K.PARK	C.M.BAE
3	14-Jun-2024	J.H.JUNG	S.K.PARK	C.M.BAE

REVISION

1	PROJECT :	LINE PROJECT	JOB NO. :	15005
2	CLIENT :	PT LOTTE CHEMICAL INDONESIA	DOCU. NO. :	LINE-900-BC-4-0001
3	LOCATION :	CILEGON, INDONESIA	ITEM NO. :	**90-P-203A/B/C**
4	UNIT :	WP5	NO. REQUIRED :	3 (THREE)
5	SERVICE :	**C3/C4 LPG FEED PUMPS**	SHEET :	1 OF 2

FLUID

LIQUID PUMPED			C4 LPG
OPERATING TEMPERATURE		(℃)	-3
VISCOSITY @ OP. TEMP.		(cP)	0.216
VAPOR PRESS. @ OP. TEMP.		(kg/cm2A)	1.08
SP. GR. @ OP. TEMP.		(-)	0.597
NORMAL CAPACITY	(60 t/h)	(m3/hr)	101
EXCESS RATIO		(%)	10
RATED CAPACITY		(m3/hr)	111

SUCTION

PRESS. @ EQUIPMENT	(kg/cm2A)	(kg/cm2G)	1.08	0.05
MIN. STATIC HEAD		(m)	1.0	
PIPE FRICTION		(kg/cm2)	0.000	
		(kg/cm2)		
		(kg/cm2)		
		(kg/cm2)		
NET SUC. PRESS.	(kg/cm2A)	(kg/cm2G)	1.140	0.11
NPSH a @ Suction Nozzle Center		(m)	1.0	

DISCHARGE

PRESS. @ EQUIP. or BL	(kg/cm2A)	(kg/cm2G)	15.03	14.0
STATIC HEAD		(m)	5.0	
PIPE FRICTION		(kg/cm2)	1.008	
FE-2011		(kg/cm2)	0.20	
MARGIN		(kg/cm2)	1.80	
		(kg/cm2)		
		(kg/cm2)		
		(kg/cm2)		
		(kg/cm2)		
TOTAL DISCH. PRESS.	(kg/cm2A)	(kg/cm2G)	18.3	17.3
SUC. PRESS.	(kg/cm2A)	(kg/cm2G)	1.1	0.11
DIFF. PRESS. (ΔP)		(kg/cm2)	17.2	
TOTAL HEAD (NET)		(m)	288	
TOTAL HEAD (TAKE)		(m)	288	
DIFF. PRESS. (ΔP) (TAKE)		(kg/cm2)	17.2	
TOTAL DISCH. PRESS. (TAKE)		(kg/cm2G)	17.3	(NOTE 2)

MAX SHUT OFF PRESSURE (NOTE 1)

MAX. SUC. STATIC HEAD		(m)	33.5
SUC. EQUIP. DESIGN PRESS.		(kg/cm2G)	0.15
MAX. SUC. PRESS.		(kg/cm2G)	2.1
DIFF. PRESS. (ΔP) (TAKE)		(kg/cm2)	17.2
SHUTOFF COEFF.		(%)	125
MAX. SHUTOFF PRESS.		(kg/cm2G)	23.6 (NOTE 3)

SKETCH

CASE : C4 LPG FEED TO NCC (GOVERNING)

2 OPERATION + 1 STANDBY, TYPE : VERTICAL SUBMERGED

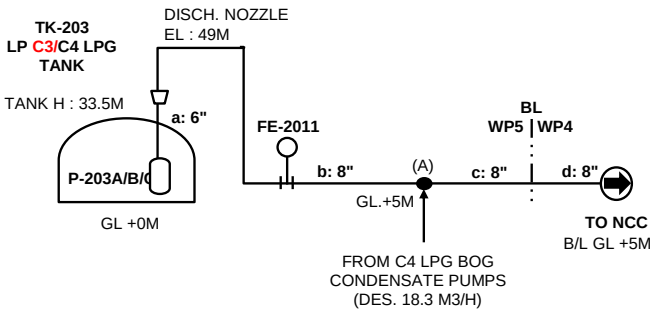

(A) Pressure = 16.6 kg/cm2g

PIPE PRESSURE DROP

PIPING MATERIAL (C.S. or SUS.) : C.S. (3L1P)

		Suction		Discharge			
SECTION				a	b	c	d
FLOW RATE	(m^3/h)			111	221	239	239
PIPE ID	(in)			6	8	8	8
PIPE SCH.	(in)			40	40	40	40
PIPE ID	(mm)			154.05	202.72	202.72	202.72
ROUGHNESS	(mm)			0.046	0.046	0.046	0.046
VELOCITY	(m/s)			1.648	1.903	2.060	2.060
REYNOLDS NO.	(-)			702796	1068131	1156538	1156538
FRICTION FACTOR	(-)			0.004	0.004	0.004	0.004
ΔP / 100m	(kg/cm^2)			0.085	0.081	0.095	0.095
STRAIGHT LENGTH	(m)			12	191	84	786
NO. OF PIPE ENTRANCE							
NO. OF PIPE EXIT							
NO. OF 90 ELBOW							
NO. OF TEE							
NO. OF GLOBE VALVE							
NO. OF GATE VALVE				1	1	2	
NO. OF CHECK VALVE				1	1		
NO. OF BUTTER VALVE							
NO. OF BALL VALVE							
NO. OF CONTRACT							
NO. OF ENLARGER							
OTHER Ks							
PIPE ΔP	(kg/cm^2)			0.0102	0.1546	0.0795	0.7443
FITTING ΔP	(kg/cm^2)			0.0072	0.0092	0.0031	0.0000
TOTAL ΔP	(kg/cm^2)			0.0175	0.1638	0.0827	0.7443

NOTES

1. Differential shut off pressure at max impeller size shall be lower than pump differential pressure X 1.25
   Max suction pressure = Max suction static head + Suction equipment design pressure
2. Discharge pressure at the pump impeller.
3. Downstream design pressure is applied as 26.0 kg/cm2g.

: SELECTED DATA FOR PUMP DATASHEET

PUMP HYDRAULIC CALCULATION SHEET

LOTTE E&C

REV	DATE	BY	CHK'D	APP'D
2	07-Mar-2024	J.H.JUNG	S.K.PARK	C.M.BAE
1	06-Feb-2023	J.H.JUNG	S.K.PARK	C.M.BAE
0	30-Jun-2022	J.H.JUNG	S.K.PARK	C.M.BAE
3	14-Jun-2024	J.H.JUNG	S.K.PARK	C.M.BAE

REVISION

1	PROJECT :	LINE PROJECT	JOB NO. :	15005
2	CLIENT :	PT LOTTE CHEMICAL INDONESIA	DOCU. NO. :	LINE-900-BC-4-0001
3	LOCATION :	CILEGON, INDONESIA	ITEM NO. :	**90-P-203A/B/C**
4	UNIT :	WP5	NO. REQUIRED :	3 (THREE)
5	SERVICE :	**C3/C4 LPG FEED PUMPS**	SHEET :	2 OF 2

REVISION: 3

	FLUID		
7	LIQUID PUMPED		C4 LPG
8	OPERATING TEMPERATURE	(℃)	-3
9	VISCOSITY @ OP. TEMP.	(cP)	0.216
10	VAPOR PRESS. @ OP. TEMP.	(kg/cm2A)	1.08
11	SP. GR. @ OP. TEMP.	(-)	0.597
12			
13	NORMAL CAPACITY (60 t/h)	(m3/hr)	101
14	EXCESS RATIO	(%)	10
15	RATED CAPACITY	(m3/hr)	111
16	**SUCTION**		
17	PRESS. @ EQUIPMENT	(kg/cm2A) (kg/cm2G)	
18	MIN. STATIC HEAD	(m)	
19	PIPE FRICTION	(kg/cm2)	
20		(kg/cm2)	
21		(kg/cm2)	
22		(kg/cm2)	
23			
24	NET SUC. PRESS.	(kg/cm2A) (kg/cm2G)	
25	NPSH a @ Suction Nozzle Center	(m)	
26	**DISCHARGE**		
27	PRESS. @ EQUIP. or BL	(kg/cm2A) (kg/cm2G)	
28	STATIC HEAD	(m)	
29	PIPE FRICTION	(kg/cm2)	
30		(kg/cm2)	
31		(kg/cm2)	
32		(kg/cm2)	
33		(kg/cm2)	
34		(kg/cm2)	
35		(kg/cm2)	
36		(kg/cm2)	
37			
38	TOTAL DISCH. PRESS.	(kg/cm2A) (kg/cm2G)	
39	SUC. PRESS.	(kg/cm2A) (kg/cm2G)	
40	DIFF. PRESS. (ΔP)	(kg/cm2)	
41	TOTAL HEAD (NET)	(m)	
42	TOTAL HEAD (TAKE)	(m)	
43	DIFF. PRESS. (ΔP) (TAKE)	(kg/cm2)	
44	TOTAL DISCH. PRESS. (TAKE)	(kg/cm2G)	
45			
46			
47			
48	**MAX SHUT OFF PRESSURE (NOTE 1)**		
49	MAX. SUC. STATIC HEAD	(m)	
50	SUC. EQUIP. DESIGN PRESS.	(kg/cm2G)	
51	MAX. SUC. PRESS.	(kg/cm2G)	
52	DIFF. PRESS. (ΔP) (TAKE)	(kg/cm2)	
53	SHUTOFF COEFF.	(%)	
54	MAX. SHUTOFF PRESS.	(kg/cm2G)	

SKETCH

PUMP MINIMUM FLOW LINE

2 OPERATION + 1 STANDBY, TYPE : VERTICAL SUBMERGED

MINIMUM FLOWRATE IS VENDOR DATA.

PUMP MINIMUM FLOWRATE =	84	m3/hr	
PUMP DISCH. P. AS PER CURVE =	20.3	kg/cm2g	(1)
SUCTION EQUIPMENT PRESS. =	0.05	kg/cm2g	(2)
SUCTION EQUIPMENT HEAD =	49.0	m	(NOTE 2)
	2.93	kg/cm2	(3)
PIPE FRICTION =	0.03	kg/cm2	(4)
FE-2011 DEL P =	0.20	kg/cm2	(5)
OTHERS DEL P =		kg/cm2	(6)
OTHERS DEL P =		kg/cm2	(7)
FV-2011 DEL P =	**17.1**	**kg/cm2**	(8)

(8) = (1) - (2) - (3) - (4) - (5) - (6) - (7)

PIPE PRESSURE DROP

PIPING MATERIAL (C.S. or SUS.) : C.S. (3L1P)

		Suction		Discharge			
SECTION				**a**			
FLOW RATE	(m^3/h)			84			
PIPE ID	(in)			**6**			
PIPE SCH.	(in)			40			
PIPE ID	(mm)			154.05			
ROUGHNESS	(mm)			0.046			
VELOCITY	(m/s)			**1.252**			
REYNOLDS NO.	(-)			534010			
FRICTION FACTOR	(-)			0.004			
ΔP / 100m	(kg/cm^2)			**0.050**			
STRAIGHT LENGTH	(m)			50			
NO. OF PIPE ENTRANCE							
NO. OF PIPE EXIT							
NO. OF 90 ELBOW							
NO. OF TEE							
NO. OF GLOBE VALVE							
NO. OF GATE VALVE							
NO. OF CHECK VALVE							
NO. OF BUTTER VALVE							
NO. OF BALL VALVE							
NO. OF CONTRACT							
NO. OF ENLARGER							
OTHER Ks							
PIPE ΔP	(kg/cm^2)			0.0251			
FITTING ΔP	(kg/cm^2)			0.0000			
TOTAL ΔP	(kg/cm^2)			**0.0251**			

NOTES

1. Differential shut off pressure at max impeller size shall be lower than pump differential pressure X 1.25
   Max suction pressure = Max suction static head + Suction equipment design pressure
2. Same as pump discharge nozzle elevation.

PUMP HYDRAULIC CALCULATION SHEET

LOTTE E&C

REV	DATE	BY	CHK'D	APP'D
2	07-Mar-2024	J.H.JUNG	S.K.PARK	C.M.BAE
1	06-Feb-2023	J.H.JUNG	S.K.PARK	C.M.BAE
0	30-Jun-2022	J.H.JUNG	S.K.PARK	C.M.BAE
3	14-Jun-2024	J.H.JUNG	S.K.PARK	C.M.BAE

REVISION

1	PROJECT :	LINE PROJECT	JOB NO. :	15005
2	CLIENT :	PT LOTTE CHEMICAL INDONESIA	DOCU. NO. :	LINE-900-BC-4-0001
3	LOCATION :	CILEGON, INDONESIA	ITEM NO. :	**90-P-204A/B**
4	UNIT :	WP5	NO. REQUIRED :	2 (TWO)
5	SERVICE :	**C4 LPG BOG CONDENSATE PUMPS**	SHEET :	1 OF 2

6	**FLUID**			
7	LIQUID PUMPED		C4 LPG	
8	OPERATING TEMPERATURE	(℃)	44	
9	VISCOSITY @ OP. TEMP.	(cP)	0.139	
10	VAPOR PRESS. @ OP. TEMP.	(kg/cm2A)	6.03	
11	SP. GR. @ OP. TEMP.	(-)	0.549	
12				
13	NORMAL CAPACITY (9.1 t/h)	(m3/hr)	16.6	
14	EXCESS RATIO	(%)	10	
15	RATED CAPACITY	(m3/hr)	18.3	
16	**SUCTION**			
17	PRESS. @ EQUIPMENT	(kg/cm2A) (kg/cm2G)	6.73	5.7
18	MIN. STATIC HEAD	(m)	3.7	
19	PIPE FRICTION	(kg/cm2)	0.045	
20	STRAINER	(kg/cm2)	0.07	
21	NPSHa MARGIN	(kg/cm2)	3.4m	
22		(kg/cm2)		
23				
24	NET SUC. PRESS.	(kg/cm2A) (kg/cm2G)	6.822	5.8
25	NPSH a @Suction Nozzle Center	(m)	11.0	
26	**DISCHARGE**			
27	PRESS. @ EQUIP. or BL	(kg/cm2A) (kg/cm2G)	17.66	16.6
28	STATIC HEAD	(m)	5.0	
29	PIPE FRICTION	(kg/cm2)	0.025	
30	FE-2013	(kg/cm2)	0.20	
31	LV-2011	(kg/cm2)	3.50	
32		(kg/cm2)		
33		(kg/cm2)		
34		(kg/cm2)		
35		(kg/cm2)		
36		(kg/cm2)		
37				
38	TOTAL DISCH. PRESS.	(kg/cm2A) (kg/cm2G)	21.7	20.6
39	SUC. PRESS.	(kg/cm2A) (kg/cm2G)	6.8	5.8
40	DIFF. PRESS. (ΔP)	(kg/cm2)	14.8	
41	TOTAL HEAD (NET)	(m)	270	
42	TOTAL HEAD (TAKE)	(m)	270	
43	DIFF. PRESS. (ΔP) (TAKE)	(kg/cm2)	14.8	
44	TOTAL DISCH. PRESS. (TAKE)	(kg/cm2G)	20.6	
45				
46				
47				
48	**MAX SHUT OFF PRESSURE (NOTE 1)**			
49	MAX. SUC. STATIC HEAD	(m)	4.8	
50	SUC. EQUIP. DESIGN PRESS.	(kg/cm2G)	7.5	
51	MAX. SUC. PRESS.	(kg/cm2G)	7.8	
52	DIFF. PRESS. (ΔP) (TAKE)	(kg/cm2)	14.8	
53	SHUTOFF COEFF.	(%)	125	
54	MAX. SHUTOFF PRESS.	(kg/cm2G)	26.3	

SKETCH

CASE : C4 LPG FEED TO NCC

1 OPERATION + 1 STANDBY, TYPE : VERTICAL CAN

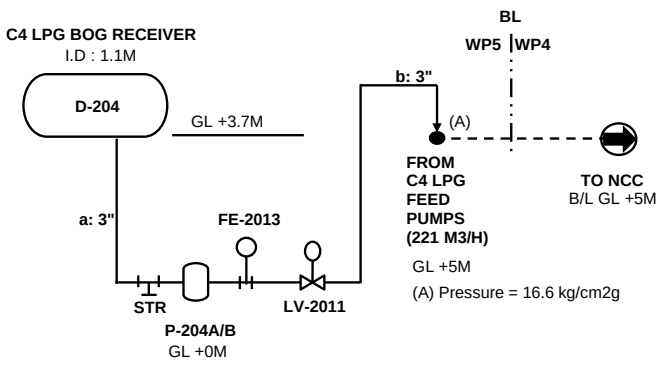

PIPE PRESSURE DROP

PIPING MATERIAL (C.S. or SUS.) : C.S. (3L1P)

		Suction		Discharge			
SECTION		**a**		**b**			
FLOW RATE	(m^3/h)	18		18			
PIPE ID	(in)	3		3			
PIPE SCH.	(in)	40		40			
PIPE ID	(mm)	77.93		77.93			
ROUGHNESS	(mm)	0.046		0.046			
VELOCITY	(m/s)	**1.063**		**1.063**			
REYNOLDS NO.	(-)	327311		327311			
FRICTION FACTOR	(-)	0.005		0.005			
ΔP / 100m	(kg/cm^2)	**0.076**		**0.076**			
STRAIGHT LENGTH	(m)	52		24			
NO. OF PIPE ENTRANCE							
NO. OF PIPE EXIT							
NO. OF 90 ELBOW		5					
NO. OF TEE							
NO. OF GLOBE VALVE							
NO. OF GATE VALVE		3		4			
NO. OF CHECK VALVE				2			
NO. OF BUTTER VALVE							
NO. OF BALL VALVE							
NO. OF CONTRACT							
NO. OF ENLARGER							
OTHER Ks							
PIPE ΔP	(kg/cm^2)	0.0390		0.0181			
FITTING ΔP	(kg/cm^2)	0.0056		0.0073			
TOTAL ΔP	(kg/cm^2)	**0.0446**		**0.0254**			

NOTES

1. Differential shut off pressure at max impeller size shall be lower than pump differential pressure X 1.25.
   Max suction pressure = Max suction static head + Suction equipment design pressure

: SELECTED DATA FOR PUMP DATASHEET

PUMP HYDRAULIC CALCULATION SHEET

LOTTE E&C

REV	DATE	BY	CHK'D	APP'D
2	07-Mar-2024	J.H.JUNG	S.K.PARK	C.M.BAE
1	06-Feb-2023	J.H.JUNG	S.K.PARK	C.M.BAE
0	30-Jun-2022	J.H.JUNG	S.K.PARK	C.M.BAE
3	14-Jun-2024	J.H.JUNG	S.K.PARK	C.M.BAE

REVISION

1	PROJECT :	LINE PROJECT	JOB NO. :	15005
2	CLIENT :	PT LOTTE CHEMICAL INDONESIA	DOCU. NO. :	LINE-900-BC-4-0001
3	LOCATION :	CILEGON, INDONESIA	ITEM NO. :	**90-P-204A/B**
4	UNIT :	WP5	NO. REQUIRED :	2 (TWO)
5	SERVICE :	**C4 LPG BOG CONDENSATE PUMPS**	SHEET :	2 OF 2

	FLUID		
7	LIQUID PUMPED		C4 LPG
8	OPERATING TEMPERATURE	(℃)	44
9	VISCOSITY @ OP. TEMP.	(cP)	0.139
10	VAPOR PRESS. @ OP. TEMP.	(kg/cm2A)	6.03
11	SP. GR. @ OP. TEMP.	(-)	0.549
12			
13	NORMAL CAPACITY (9.1 t/h)	(m3/hr)	16.6
14	EXCESS RATIO	(%)	10
15	RATED CAPACITY	(m3/hr)	18.3
16	**SUCTION**		
17	PRESS. @ EQUIPMENT (kg/cm2A)	(kg/cm2G)	
18	MIN. STATIC HEAD	(m)	
19	PIPE FRICTION	(kg/cm2)	
20		(kg/cm2)	
21		(kg/cm2)	
22		(kg/cm2)	
23			
24	NET SUC. PRESS. (kg/cm2A)	(kg/cm2G)	
25	NPSH a @Suction Nozzle Cente(CAL.) (TAKE)	(m)	
26	**DISCHARGE**		
27	PRESS. @ EQUIP. or BL (kg/cm2A)	(kg/cm2G)	
28	STATIC HEAD	(m)	
29	PIPE FRICTION	(kg/cm2)	
30		(kg/cm2)	
31		(kg/cm2)	
32		(kg/cm2)	
33		(kg/cm2)	
34		(kg/cm2)	
35		(kg/cm2)	
36		(kg/cm2)	
37			
38	TOTAL DISCH. PRESS. (kg/cm2A)	(kg/cm2G)	
39	SUC. PRESS. (kg/cm2A)	(kg/cm2G)	
40	DIFF. PRESS. (ΔP)	(kg/cm2)	
41	TOTAL HEAD (NET)	(m)	
42	TOTAL HEAD (TAKE)	(m)	
43	DIFF. PRESS. (ΔP) (TAKE)	(kg/cm2)	
44	TOTAL DISCH. PRESS. (TAKE)	(kg/cm2G)	
45			
46			
47			
48	**MAX SHUT OFF PRESSURE (NOTE 1)**		
49	MAX. SUC. STATIC HEAD	(m)	
50	SUC. EQUIP. DESIGN PRESS.	(kg/cm2G)	
51	MAX. SUC. PRESS.	(kg/cm2G)	
52	DIFF. PRESS. (ΔP) (TAKE)	(kg/cm2)	
53	SHUTOFF COEFF.	(%)	
54	MAX. SHUTOFF PRESS.	(kg/cm2G)	

SKETCH

PUMP MINIMUM FLOW LINE

1 OPERATION + 1 STANDBY, TYPE : VERTICAL CAN

MINIMUM FLOWRATE IS VENDOR DATA.

PUMP MINIMUM FLOWRATE =	5.5	m3/hr	
PUMP DISCH. P. AS PER CURVE =	24.1	kg/cm2g	(1)
SUCTION EQUIPMENT PRESS. =	5.70	kg/cm2g	(2)
SUCTION EQUIPMENT HEAD =	4.8	m	
	0.26	kg/cm2	(3)
PIPE FRICTION =	0.57	kg/cm2	(4)
FE-2013 DEL P =	0.20	kg/cm2	(5)
OTHERS DEL P =		kg/cm2	(6)
OTHERS DEL P =		kg/cm2	(7)
FV-2013 DEL P =	**17.4**	**kg/cm2**	(8)

(8) = (1) - (2) - (3) - (4) - (5) - (6) - (7)

PIPE PRESSURE DROP

PIPING MATERIAL (C.S. or SUS.) : C.S. (3L1P)

		Suction		Discharge			
SECTION				**a**			
FLOW RATE	(m^3/h)			5.5			
PIPE ID	(in)			**1.5**			
PIPE SCH.	(in)			80			
PIPE ID	(mm)			38.10			
ROUGHNESS	(mm)			0.046			
VELOCITY	(m/s)			**1.340**			
REYNOLDS NO.	(-)			201652			
FRICTION FACTOR	(-)			0.005			
ΔP / 100m	(kg/cm^2)			**0.287**			
STRAIGHT LENGTH	(m)			200			
NO. OF PIPE ENTRANCE							
NO. OF PIPE EXIT							
NO. OF 90 ELBOW							
NO. OF TEE							
NO. OF GLOBE VALVE							
NO. OF GATE VALVE							
NO. OF CHECK VALVE							
NO. OF BUTTER VALVE							
NO. OF BALL VALVE							
NO. OF CONTRACT							
NO. OF ENLARGER							
OTHER Ks							
PIPE ΔP	(kg/cm^2)			0.5750			
FITTING ΔP	(kg/cm^2)			0.0000			
TOTAL ΔP	(kg/cm^2)			**0.5750**			

NOTES

1. Differential shut off pressure at max impeller size shall be lower than pump differential pressure X 1.25.
   Max suction pressure = Max suction static head + Suction equipment design pressure

PUMP HYDRAULIC CALCULATION SHEET

LOTTE E&C

REV	DATE	BY	CHK'D	APP'D
2	07-Mar-2024	J.H.JUNG	S.K.PARK	C.M.BAE
1	06-Feb-2023	J.H.JUNG	S.K.PARK	C.M.BAE
0	30-Jun-2022	J.H.JUNG	S.K.PARK	C.M.BAE
3	14-Jun-2024	J.H.JUNG	S.K.PARK	C.M.BAE

REVISION

1	PROJECT :	LINE PROJECT	JOB NO. :	15005
2	CLIENT :	PT LOTTE CHEMICAL INDONESIA	DOCU. NO. :	LINE-900-BC-4-0001
3	LOCATION :	CILEGON, INDONESIA	ITEM NO. :	**90-P-215A/B**
4	UNIT :	WP5	NO. REQUIRED :	2 (TWO)
5	SERVICE :	**LP ETHYLENE EXPORT PUMPS**	SHEET :	1 OF 3

	FLUID			
7	LIQUID PUMPED		LP Ethylene	
8	OPERATING TEMPERATURE	(℃)	-103.6	
9	VISCOSITY @ OP. TEMP.	(cP)	0.18	
10	VAPOR PRESS. @ OP. TEMP.	(kg/cm2A)	1.06	
11	SP. GR. @ OP. TEMP.	(-)	0.566	
12				
13	NORMAL CAPACITY (300 t/h)	(m3/hr)	530	
14	EXCESS RATIO	(%)	10	
15	RATED CAPACITY	(m3/hr)	583	
16	**SUCTION**			
17	PRESS. @ EQUIPMENT	(kg/cm2A) (kg/cm2G)	1.06	0.03
18	MIN. STATIC HEAD	(m)	1.1	
19	PIPE FRICTION	(kg/cm2)	0.000	
20		(kg/cm2)		
21		(kg/cm2)		
22		(kg/cm2)		
23				
24	NET SUC. PRESS.	(kg/cm2A) (kg/cm2G)	1.122	0.09
25	NPSH a @ Suction Nozzle Center	(m)	1.1	
26	**DISCHARGE**			
27	PRESS. @ EQUIP. or BL	(kg/cm2A) (kg/cm2G)	1.68	0.65
28	STATIC HEAD	(m)	10.0	
29	PIPE FRICTION	(kg/cm2)	2.845	
30	FE-2016	(kg/cm2)	0.20	
31	FE-2022	(kg/cm2)	0.20	
32	FE-6006	(kg/cm2)	0.27	
33	LOADING ARM ΔP	(kg/cm2)	1.00	
34	MARGIN	(kg/cm2)	5.75	
35		(kg/cm2)		
36		(kg/cm2)		
37				
38	TOTAL DISCH. PRESS.	(kg/cm2A) (kg/cm2G)	12.5	11.5
39	SUC. PRESS.	(kg/cm2A) (kg/cm2G)	1.1	0.1
40	DIFF. PRESS. (ΔP)	(kg/cm2)	11.4	
41	TOTAL HEAD (NET)	(m)	201	
42	TOTAL HEAD (TAKE)	(m)	201	
43	DIFF. PRESS. (ΔP) (TAKE)	(kg/cm2)	11.4	
44	TOTAL DISCH. PRESS. (TAKE)	(kg/cm2G)	11.5	(NOTE 2)
45				
46				
47				
48	**MAX SHUT OFF PRESSURE (NOTE 1)**			
49	MAX. SUC. STATIC HEAD	(m)	20.0	
50	SUC. EQUIP. DESIGN PRESS.	(kg/cm2G)	0.15	
51	MAX. SUC. PRESS.	(kg/cm2G)	1.3	(NOTE 3)
52	DIFF. PRESS. (ΔP) (TAKE)	(kg/cm2)	11.4	
53	SHUTOFF COEFF.	(%)	125	
54	MAX. SHUTOFF PRESS.	(kg/cm2G)	15.5	(NOTE 3)

SKETCH

CASE 1 : EXPORT TO NEW JETTY (GOVERNING)

1 OPERATION + 1 STANDBY, TYPE : VERTICAL SUBMERGED

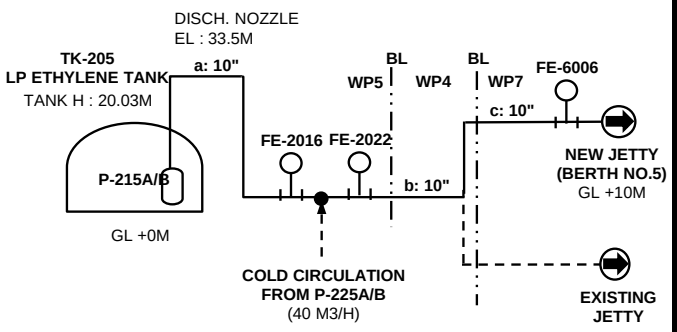

PIPE PRESSURE DROP

PIPING MATERIAL (C.S. or SUS.) : SUS. (1S0Y)

		Suction		Discharge		
SECTION				**a**	**b**	**c**
FLOW RATE	(m^3/h)			583	623	583
PIPE ID	(in)			**10**	**10**	**10**
PIPE SCH.	(in)			10S	10S	10S
PIPE ID	(mm)			264.67	264.67	264.67
ROUGHNESS	(mm)			0.015	0.015	0.015
VELOCITY	(m/s)			**2.944**	**3.145**	**2.944**
REYNOLDS NO.	(-)			2449708	2617784	2449708
FRICTION FACTOR	(-)			0.003	0.003	0.003
ΔP / 100m	(kg/cm^2)			**0.111**	**0.127**	**0.111**
STRAIGHT LENGTH	(m)			340	420	1692
NO. OF PIPE ENTRANCE						
NO. OF PIPE EXIT						
NO. OF 90 ELBOW						
NO. OF TEE						
NO. OF GLOBE VALVE						
NO. OF GATE VALVE				2		4
NO. OF CHECK VALVE				1		1
NO. OF BUTTER VALVE						
NO. OF BALL VALVE						
NO. OF CONTRACT						
NO. OF ENLARGER						
OTHER Ks						
PIPE ΔP	(kg/cm^2)			0.3784	0.5314	1.8833
FITTING ΔP	(kg/cm^2)			0.0229	0.0000	0.0287
TOTAL ΔP	(kg/cm^2)			**0.4013**	**0.5314**	**1.9120**

NOTES

1. Differential shut off pressure at max impeller size shall be lower than pump differential pressure X 1.25.
   Max suction pressure = Max suction static head + Suction equipment design pressure
2. Discharge pressure at the pump impeller.
3. Max suction pressure and downstream design pressure is applied as 1.5 and 16.6 kg/cm2g on datasheet.

: SELECTED DATA FOR PUMP DATASHEET

PUMP HYDRAULIC CALCULATION SHEET

LOTTE E&C

REV	DATE	BY	CHK'D	APP'D
2	07-Mar-2024	J.H.JUNG	S.K.PARK	C.M.BAE
1	06-Feb-2023	J.H.JUNG	S.K.PARK	C.M.BAE
0	30-Jun-2022	J.H.JUNG	S.K.PARK	C.M.BAE
3	14-Jun-2024	J.H.JUNG	S.K.PARK	C.M.BAE

REVISION

1	PROJECT :	LINE PROJECT	JOB NO. :	15005
2	CLIENT :	PT LOTTE CHEMICAL INDONESIA	DOCU. NO. :	LINE-900-BC-4-0001
3	LOCATION :	CILEGON, INDONESIA	ITEM NO. :	**90-P-215A/B**
4	UNIT :	WP5	NO. REQUIRED :	2 (TWO)
5	SERVICE :	**LP ETHYLENE EXPORT PUMPS**	SHEET :	2 OF 3

	FLUID			
7	LIQUID PUMPED		LP Ethylene	
8	OPERATING TEMPERATURE	(℃)	-103.6	
9	VISCOSITY @ OP. TEMP.	(cP)	0.18	
10	VAPOR PRESS. @ OP. TEMP.	(kg/cm2A)	1.06	
11	SP. GR. @ OP. TEMP.	(-)	0.566	
12				
13	NORMAL CAPACITY (300 t/h)	(m3/hr)	530	
14	EXCESS RATIO	(%)	10	
15	RATED CAPACITY	(m3/hr)	583	
16	**SUCTION**			
17	PRESS. @ EQUIPMENT	(kg/cm2A) (kg/cm2G)	1.06	0.03
18	MIN. STATIC HEAD	(m)	1.1	
19	PIPE FRICTION	(kg/cm2)	0.000	
20		(kg/cm2)		
21		(kg/cm2)		
22		(kg/cm2)		
23				
24	NET SUC. PRESS.	(kg/cm2A) (kg/cm2G)	1.122	0.09
25	NPSH a @ Suction Nozzle Center	(m)	1.1	
26	**DISCHARGE**			
27	PRESS. @ EQUIP. or BL	(kg/cm2A) (kg/cm2G)	1.68	0.65
28	STATIC HEAD	(m)	10.0	
29	PIPE FRICTION	(kg/cm2)	2.169	
30	FE-2016	(kg/cm2)	0.20	
31	FE-2022	(kg/cm2)	0.20	
32	LOADING ARM ΔP	(kg/cm2)	1.00	
33		(kg/cm2)		
34		(kg/cm2)		
35		(kg/cm2)		
36		(kg/cm2)		
37				
38	TOTAL DISCH. PRESS.	(kg/cm2A) (kg/cm2G)	5.82	4.8
39	SUC. PRESS.	(kg/cm2A) (kg/cm2G)	1.12	0.1
40	DIFF. PRESS. (ΔP)	(kg/cm2)	4.7	
41	TOTAL HEAD (NET)	(m)	83	
42	TOTAL HEAD (TAKE)	(m)		
43	DIFF. PRESS. (ΔP) (TAKE)	(kg/cm2)		
44	TOTAL DISCH. PRESS. (TAKE)	(kg/cm2G)		
45				
46				
47				
48	**MAX SHUT OFF PRESSURE (NOTE 1)**			
49	MAX. SUC. STATIC HEAD	(m)		
50	SUC. EQUIP. DESIGN PRESS.	(kg/cm2G)		
51	MAX. SUC. PRESS.	(kg/cm2G)		
52	DIFF. PRESS. (ΔP) (TAKE)	(kg/cm2)		
53	SHUTOFF COEFF.	(%)		
54	MAX. SHUTOFF PRESS.	(kg/cm2G)		

SKETCH

CASE 2 : EXPORT TO EXISTING JETTY

1 OPERATION + 1 STANDBY, TYPE : VERTICAL SUBMERGED

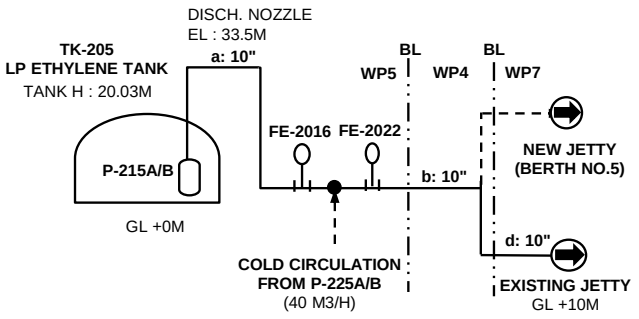

PIPE PRESSURE DROP

PIPING MATERIAL (C.S. or SUS.) : SUS. (1S0Y)

		Suction		Discharge		
SECTION				**a**	**b**	**d**
FLOW RATE	(m^3/h)			583	623	583
PIPE ID	(in)			**10**	**10**	**10**
PIPE SCH.	(in)			10S	10S	10S
PIPE ID	(mm)			264.67	264.67	264.67
ROUGHNESS	(mm)			0.015	0.015	0.015
VELOCITY	(m/s)			**2.944**	**3.145**	**2.944**
REYNOLDS NO.	(-)			2449708	2617784	2449708
FRICTION FACTOR	(-)			0.003	0.003	0.003
ΔP / 100m	(kg/cm^2)			**0.111**	**0.127**	**0.111**
STRAIGHT LENGTH	(m)			340	414	1104
NO. OF PIPE ENTRANCE						
NO. OF PIPE EXIT						
NO. OF 90 ELBOW						
NO. OF TEE						
NO. OF GLOBE VALVE						
NO. OF GATE VALVE				7		
NO. OF CHECK VALVE				1		
NO. OF BUTTER VALVE						
NO. OF BALL VALVE						
NO. OF CONTRACT						
NO. OF ENLARGER						
OTHER Ks						
PIPE ΔP	(kg/cm^2)			0.3784	0.5238	1.2288
FITTING ΔP	(kg/cm^2)			0.0375	0.0000	0.0000
TOTAL ΔP	(kg/cm^2)			**0.4159**	**0.5238**	**1.2288**

NOTES

1. Differential shut off pressure at max impeller size shall be lower than pump differential pressure X 1.25.
   Max suction pressure = Max suction static head + Suction equipment design pressure
2. Discharge pressure at the outlet nozzle.

PUMP HYDRAULIC CALCULATION SHEET

LOTTE E&C

REV	DATE	BY	CHK'D	APP'D
2	07-Mar-2024	J.H.JUNG	S.K.PARK	C.M.BAE
1	06-Feb-2023	J.H.JUNG	S.K.PARK	C.M.BAE
0	30-Jun-2022	J.H.JUNG	S.K.PARK	C.M.BAE
3	14-Jun-2024	J.H.JUNG	S.K.PARK	C.M.BAE

REVISION

1	PROJECT :	LINE PROJECT	JOB NO. :	15005
2	CLIENT :	PT LOTTE CHEMICAL INDONESIA	DOCU. NO. :	LINE-900-BC-4-0001
3	LOCATION :	CILEGON, INDONESIA	ITEM NO. :	**90-P-215A/B**
4	UNIT :	WP5	NO. REQUIRED :	2 (TWO)
5	SERVICE :	**LP ETHYLENE EXPORT PUMPS**	SHEET :	3 OF 3

	FLUID		
7	LIQUID PUMPED		LP Ethylene
8	OPERATING TEMPERATURE	(℃)	-103.6
9	VISCOSITY @ OP. TEMP.	(cP)	0.18
10	VAPOR PRESS. @ OP. TEMP.	(kg/cm2A)	1.06
11	SP. GR. @ OP. TEMP.	(-)	0.566
12			
13	NORMAL CAPACITY (300 t/h)	(m3/hr)	530
14	EXCESS RATIO	(%)	10
15	RATED CAPACITY	(m3/hr)	583
16	**SUCTION**		
17	PRESS. @ EQUIPMENT	(kg/cm2A) (kg/cm2G)	
18	MIN. STATIC HEAD	(m)	
19	PIPE FRICTION	(kg/cm2)	
20		(kg/cm2)	
21		(kg/cm2)	
22		(kg/cm2)	
23			
24	NET SUC. PRESS.	(kg/cm2A) (kg/cm2G)	
25	NPSH a @ Suction Nozzle Center	(m)	
26	**DISCHARGE**		
27	PRESS. @ EQUIP. or BL	(kg/cm2A) (kg/cm2G)	
28	STATIC HEAD	(m)	
29	PIPE FRICTION	(kg/cm2)	
30		(kg/cm2)	
31		(kg/cm2)	
32		(kg/cm2)	
33		(kg/cm2)	
34		(kg/cm2)	
35		(kg/cm2)	
36		(kg/cm2)	
37			
38	TOTAL DISCH. PRESS.	(kg/cm2A) (kg/cm2G)	
39	SUC. PRESS.	(kg/cm2A) (kg/cm2G)	
40	DIFF. PRESS. (ΔP)	(kg/cm2)	
41	TOTAL HEAD (NET)	(m)	
42	TOTAL HEAD (TAKE)	(m)	
43	DIFF. PRESS. (ΔP) (TAKE)	(kg/cm2)	
44	TOTAL DISCH. PRESS. (TAKE)	(kg/cm2G)	
45			
46			
47			
48	**MAX SHUT OFF PRESSURE (NOTE 1)**		
49	MAX. SUC. STATIC HEAD	(m)	
50	SUC. EQUIP. DESIGN PRESS.	(kg/cm2G)	
51	MAX. SUC. PRESS.	(kg/cm2G)	
52	DIFF. PRESS. (ΔP) (TAKE)	(kg/cm2)	
53	SHUTOFF COEFF.	(%)	
54	MAX. SHUTOFF PRESS.	(kg/cm2G)	

SKETCH

PUMP MINIMUM FLOW LINE

1 OPERATION + 1 STANDBY, TYPE : VERTICAL SUBMERGED

MINIMUM FLOWRATE IS VENDOR DATA.

PUMP MINIMUM FLOWRATE =	200	m3/hr	
PUMP DISCH. P. AS PER CURVE =	13.4	kg/cm2g	(1)
SUCTION EQUIPMENT PRESS. =	0.03	kg/cm2g	(2)
SUCTION EQUIPMENT HEAD =	33.5	m	(NOTE 2)
	1.90	kg/cm2	(3)
PIPE FRICTION =	0.09	kg/cm2	(4)
FE-2016 DEL P =	0.20	kg/cm2	(5)
OTHERS DEL P =		kg/cm2	(6)
OTHERS DEL P =		kg/cm2	(7)
FV-2016 DEL P =	**11.2**	**kg/cm2**	(8)

(8) = (1) - (2) - (3) - (4) - (5) - (6) - (7)

PIPE PRESSURE DROP

PIPING MATERIAL (C.S. or SUS.) : SUS. (1S0Y)

		Suction		Discharge			
SECTION				**a**			
FLOW RATE	(m^3/h)			200			
PIPE ID	(in)			6			
PIPE SCH.	(in)			10S			
PIPE ID	(mm)			161.47			
ROUGHNESS	(mm)			0.015			
VELOCITY	(m/s)			**2.713**			
REYNOLDS NO.	(-)			1377491			
FRICTION FACTOR	(-)			0.003			
ΔP / 100m	(kg/cm^2)			**0.171**			
STRAIGHT LENGTH	(m)			50			
NO. OF PIPE ENTRANCE							
NO. OF PIPE EXIT							
NO. OF 90 ELBOW							
NO. OF TEE							
NO. OF GLOBE VALVE							
NO. OF GATE VALVE							
NO. OF CHECK VALVE							
NO. OF BUTTER VALVE							
NO. OF BALL VALVE							
NO. OF CONTRACT							
NO. OF ENLARGER							
OTHER Ks							
PIPE ΔP	(kg/cm^2)			0.0855			
FITTING ΔP	(kg/cm^2)			0.0000			
TOTAL ΔP	(kg/cm^2)			**0.0855**			

NOTES

1. Differential shut off pressure at max impeller size shall be lower than pump differential pressure X 1.25.
   Max suction pressure = Max suction static head + Suction equipment design pressure
2. Same as pump discharge nozzle elevation.

PUMP HYDRAULIC CALCULATION SHEET

LOTTE E&C

REV	DATE	BY	CHK'D	APP'D
2	07-Mar-2024	J.H.JUNG	S.K.PARK	C.M.BAE
1	06-Feb-2023	J.H.JUNG	S.K.PARK	C.M.BAE
0	30-Jun-2022	J.H.JUNG	S.K.PARK	C.M.BAE
3	14-Jun-2024	J.H.JUNG	S.K.PARK	C.M.BAE

REVISION

1	PROJECT :	LINE PROJECT	JOB NO. :	15005
2	CLIENT :	PT LOTTE CHEMICAL INDONESIA	DOCU. NO. :	LINE-900-BC-4-0001
3	LOCATION :	CILEGON, INDONESIA	ITEM NO. :	**90-P-218A/B**
4	UNIT :	WP5	NO. REQUIRED :	2 (TWO)
5	SERVICE :	**LP PROPYLENE EXPORT PUMPS**	SHEET :	1 OF 2

6	**FLUID**			
7	LIQUID PUMPED		LP Propylene	
8	OPERATING TEMPERATURE	(℃)	-46.9	
9	VISCOSITY @ OP. TEMP.	(cP)	0.175	
10	VAPOR PRESS. @ OP. TEMP.	(kg/cm2A)	1.06	
11	SP. GR. @ OP. TEMP.	(-)	0.608	
12				
13	NORMAL CAPACITY (300 t/h)	(m3/hr)	493	
14	EXCESS RATIO	(%)	10	
15	RATED CAPACITY	(m3/hr)	543	
16	**SUCTION**			
17	PRESS. @ EQUIPMENT	(kg/cm2A) (kg/cm2G)	1.06	0.03
18	MIN. STATIC HEAD	(m)	1.6	
19	PIPE FRICTION	(kg/cm2)	0.000	
20		(kg/cm2)		
21		(kg/cm2)		
22		(kg/cm2)		
23				
24	NET SUC. PRESS.	(kg/cm2A) (kg/cm2G)	1.157	0.12
25	NPSH a @ Suction Nozzle Center	(m)	1.6	
26	**DISCHARGE**			
27	PRESS. @ EQUIP. or BL	(kg/cm2A) (kg/cm2G)	1.68	0.65
28	STATIC HEAD	(m)	10.0	
29	PIPE FRICTION	(kg/cm2)	3.001	
30	FE-2024	(kg/cm2)	0.20	
31	FE-2030	(kg/cm2)	0.20	
32	FE-6004	(kg/cm2)	0.29	
33	LOADING ARM DEL P	(kg/cm2)	1.00	
34	MARGIN	(kg/cm2)	3.00	
35		(kg/cm2)		
36		(kg/cm2)		
37				
38	TOTAL DISCH. PRESS.	(kg/cm2A) (kg/cm2G)	10.0	8.9
39	SUC. PRESS.	(kg/cm2A) (kg/cm2G)	1.2	0.1
40	DIFF. PRESS. (ΔP)	(kg/cm2)	8.8	
41	TOTAL HEAD (NET)	(m)	145	
42	TOTAL HEAD (TAKE)	(m)	145	
43	DIFF. PRESS. (ΔP) (TAKE)	(kg/cm2)	8.8	
44	TOTAL DISCH. PRESS. (TAKE)	(kg/cm2G)	8.9	(NOTE 2)
45				
46				
47				
48	**MAX SHUT OFF PRESSURE (NOTE 1)**			
49	MAX. SUC. STATIC HEAD	(m)	22.0	
50	SUC. EQUIP. DESIGN PRESS.	(kg/cm2G)	0.15	
51	MAX. SUC. PRESS.	(kg/cm2G)	1.5	
52	DIFF. PRESS. (ΔP) (TAKE)	(kg/cm2)	8.8	
53	SHUTOFF COEFF.	(%)	125	
54	MAX. SHUTOFF PRESS.	(kg/cm2G)	12.5	(NOTE 3)

SKETCH

CASE : EXPORT TO NEW JETTY (GOVERNING)

1 OPERATION + 1 STANDBY, TYPE : VERTICAL SUBMERGED

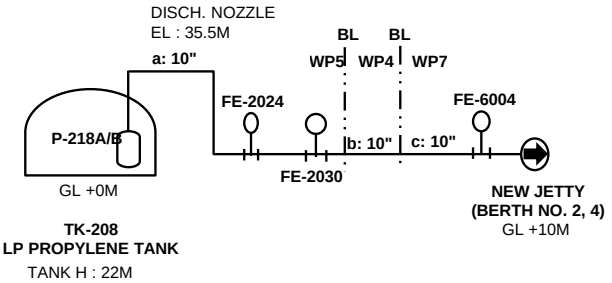

PIPE PRESSURE DROP

PIPING MATERIAL (C.S. or SUS.) : C.S. (1L1P)

		Suction		Discharge			
SECTION				**a**	**b**	**c**	
FLOW RATE	(m^3/h)			543	543	543	
PIPE ID	(in)			**10**	**10**	**10**	
PIPE SCH.	(in)			40	40	40	
PIPE ID	(mm)			254.51	254.51	254.51	
ROUGHNESS	(mm)			0.046	0.046	0.046	
VELOCITY	(m/s)			**2.963**	**2.963**	**2.963**	
REYNOLDS NO.	(-)			2620349	2620349	2620349	
FRICTION FACTOR	(-)			0.003	0.003	0.003	
ΔP / 100m	(kg/cm^2)			**0.148**	**0.148**	**0.148**	
STRAIGHT LENGTH	(m)			290	420	1272	
NO. OF PIPE ENTRANCE							
NO. OF PIPE EXIT							
NO. OF 90 ELBOW							
NO. OF TEE							
NO. OF GLOBE VALVE							
NO. OF GATE VALVE				2		5	
NO. OF CHECK VALVE				1		1	
NO. OF BUTTER VALVE							
NO. OF BALL VALVE							
NO. OF CONTRACT							
NO. OF ENLARGER							
OTHER Ks							
PIPE ΔP	(kg/cm^2)			0.4307	0.6232	1.8875	
FITTING ΔP	(kg/cm^2)			0.0249	0.0000	0.0345	
TOTAL ΔP	(kg/cm^2)			**0.4557**	**0.6232**	**1.9220**	

NOTES

1. Differential shut off pressure at max impeller size shall be lower than pump differential pressure X 1.25.
   Max suction pressure = Max suction static head + Suction equipment design pressure
2. Discharge pressure at the pump impeller.
3. Downstream system design pressure is applied as 13.0 kg/cm2g.

: SELECTED DATA FOR PUMP DATASHEET

PUMP HYDRAULIC CALCULATION SHEET

LOTTE E&C

REV	DATE	BY	CHK'D	APP'D
2	07-Mar-2024	J.H.JUNG	S.K.PARK	C.M.BAE
1	06-Feb-2023	J.H.JUNG	S.K.PARK	C.M.BAE
0	30-Jun-2022	J.H.JUNG	S.K.PARK	C.M.BAE
3	14-Jun-2024	J.H.JUNG	S.K.PARK	C.M.BAE

REVISION

PROJECT	:	LINE PROJECT	JOB NO.	: 15005
CLIENT	:	PT LOTTE CHEMICAL INDONESIA	DOCU. NO.	: LINE-900-BC-4-0001
LOCATION	:	CILEGON, INDONESIA	ITEM NO.	: **90-P-218A/B**
UNIT	:	WP5	NO. REQUIRED	: 2 (TWO)
SERVICE	:	**LP PROPYLENE EXPORT PUMPS**	SHEET	: 2 OF 2

FLUID

LIQUID PUMPED		LP Propylene
OPERATING TEMPERATURE	(℃)	-46.9
VISCOSITY @ OP. TEMP.	(cP)	0.175
VAPOR PRESS. @ OP. TEMP.	(kg/cm2A)	1.06
SP. GR. @ OP. TEMP.	(-)	0.608
NORMAL CAPACITY (300 t/hr)	(m3/hr)	493
EXCESS RATIO	(%)	10
RATED CAPACITY	(m3/hr)	543

SUCTION

PRESS. @ EQUIPMENT (kg/cm2A)	(kg/cm2G)	
MIN. STATIC HEAD	(m)	
PIPE FRICTION	(kg/cm2)	
	(kg/cm2)	
	(kg/cm2)	
	(kg/cm2)	
NET SUC. PRESS. (kg/cm2A)	(kg/cm2G)	
NPSH a @ Suction Nozzle Center	(m)	

DISCHARGE

PRESS. @ EQUIP. or BL (kg/cm2A)	(kg/cm2G)	
STATIC HEAD	(m)	
PIPE FRICTION	(kg/cm2)	
	(kg/cm2)	
	(kg/cm2)	
	(kg/cm2)	
	(kg/cm2)	
	(kg/cm2)	
	(kg/cm2)	
TOTAL DISCH. PRESS. (kg/cm2A)	(kg/cm2G)	
SUC. PRESS. (kg/cm2A)	(kg/cm2G)	
DIFF. PRESS. (ΔP)	(kg/cm2)	
TOTAL HEAD (NET)	(m)	
TOTAL HEAD (TAKE)	(m)	
DIFF. PRESS. (ΔP) (TAKE)	(kg/cm2)	
TOTAL DISCH. PRESS. (TAKE)	(kg/cm2G)	

MAX SHUT OFF PRESSURE (NOTE 1)

MAX. SUC. STATIC HEAD	(m)	
SUC. EQUIP. DESIGN PRESS.	(kg/cm2G)	
MAX. SUC. PRESS.	(kg/cm2G)	
DIFF. PRESS. (ΔP) (TAKE)	(kg/cm2)	
SHUTOFF COEFF.	(%)	
MAX. SHUTOFF PRESS.	(kg/cm2G)	

SKETCH

PUMP MINIMUM FLOW LINE

1 OPERATION + 1 STANDBY, TYPE : VERTICAL SUBMERGED

MINIMUM FLOWRATE IS VENDOR DATA.

PUMP MINIMUM FLOWRATE =	200	m3/hr	
PUMP DISCH. P. AS PER CURVE =	10.5	kg/cm2g	(1)
SUCTION EQUIPMENT PRESS. =	0.03	kg/cm2g	(2)
SUCTION EQUIPMENT HEAD =	35.5	m	(NOTE 2)
	2.16	kg/cm2	(3)
PIPE FRICTION =	0.12	kg/cm2	(4)
FE-2024 DEL P =	0.20	kg/cm2	(5)
OTHERS DEL P =		kg/cm2	(6)
OTHERS DEL P =		kg/cm2	(7)
FV-2024 DEL P =	**8.0**	**kg/cm2**	(8)

(8) = (1) - (2) - (3) - (4) - (5) - (6) - (7)

PIPE PRESSURE DROP

PIPING MATERIAL (C.S. or SUS.) : C.S. (1L1P)

		Suction		Discharge			
SECTION				**a**			
FLOW RATE	(m^3/h)			200			
PIPE ID	(in)			**6**			
PIPE SCH.	(in)			40			
PIPE ID	(mm)			154.05			
ROUGHNESS	(mm)			0.015			
VELOCITY	(m/s)			**2.981**			
REYNOLDS NO.	(-)			1595293			
FRICTION FACTOR	(-)			0.003			
ΔP / 100m	(kg/cm^2)			**0.231**			
STRAIGHT LENGTH	(m)			50			
NO. OF PIPE ENTRANCE							
NO. OF PIPE EXIT							
NO. OF 90 ELBOW							
NO. OF TEE							
NO. OF GLOBE VALVE							
NO. OF GATE VALVE							
NO. OF CHECK VALVE							
NO. OF BUTTER VALVE							
NO. OF BALL VALVE							
NO. OF CONTRACT							
NO. OF ENLARGER							
OTHER Ks							
PIPE ΔP	(kg/cm^2)			0.1156			
FITTING ΔP	(kg/cm^2)			0.0000			
TOTAL ΔP	(kg/cm^2)			**0.1156**			

NOTES

1. Differential shut off pressure at max impeller size shall be lower than pump differential pressure X 1.25.
   Max suction pressure = Max suction static head + Suction equipment design pressure
2. Same as pump discharge nozzle elevation.

PUMP HYDRAULIC CALCULATION SHEET

LOTTE E&C

REV	DATE	BY	CHK'D	APP'D
2	07-Mar-2024	J.H.JUNG	S.K.PARK	C.M.BAE
1	06-Feb-2023	J.H.JUNG	S.K.PARK	C.M.BAE
0	30-Jun-2022	J.H.JUNG	S.K.PARK	C.M.BAE
3	14-Jun-2024	J.H.JUNG	S.K.PARK	C.M.BAE

REVISION

1	PROJECT :	LINE PROJECT	JOB NO. :	15005
2	CLIENT :	PT LOTTE CHEMICAL INDONESIA	DOCU. NO. :	LINE-900-BC-4-0001
3	LOCATION :	CILEGON, INDONESIA	ITEM NO. :	**90-P-225A/B**
4	UNIT :	WP5	NO. REQUIRED :	2 (TWO)
5	SERVICE :	**LP ETHYLENE TRANSFER PUMPS**	SHEET :	1 OF 3

	FLUID			
7	LIQUID PUMPED		LP Ethylene	
8	OPERATING TEMPERATURE	(℃)	-103.6	
9	VISCOSITY @ OP. TEMP.	(cP)	0.18	
10	VAPOR PRESS. @ OP. TEMP.	(kg/cm2A)	1.06	
11	SP. GR. @ OP. TEMP.	(-)	0.566	
12				
13	NORMAL CAPACITY (50 t/h)	(m3/hr)	88	
14	EXCESS RATIO	(%)	10	
15	RATED CAPACITY	(m3/hr)	97	
16	**SUCTION**			
17	PRESS. @ EQUIPMENT	(kg/cm2A) (kg/cm2G)	1.06	0.03
18	MIN. STATIC HEAD	(m)	1.1	
19	PIPE FRICTION	(kg/cm2)	0.000	
20		(kg/cm2)		
21		(kg/cm2)		
22		(kg/cm2)		
23				
24	NET SUC. PRESS.	(kg/cm2A) (kg/cm2G)	1.122	0.09
25	NPSH a @ Suction Nozzle Center	(m)	1.1	
26	**DISCHARGE**			
27	PRESS. @ EQUIP. or BL	(kg/cm2A) (kg/cm2G)	20.90	19.9
28	STATIC HEAD	(m)	21.7	
29	PIPE FRICTION	(kg/cm2)	0.818	
30	FE-2017	(kg/cm2)	0.20	
31	FE-2019	(kg/cm2)	0.20	
32	FV-2019	(kg/cm2)	3.30	
33	E-205 (LP EL HEATER)	(kg/cm2)	0.70	
34	STATIC HEAD (E-205 INLET)	(kg/cm2)	0.55	
35	STATIC HEAD (E-205 OUTLET)	(kg/cm2)	-0.43	
36		(kg/cm2)		
37				
38	TOTAL DISCH. PRESS.	(kg/cm2A) (kg/cm2G)	27.2	26.2
39	SUC. PRESS.	(kg/cm2A) (kg/cm2G)	1.1	0.1
40	DIFF. PRESS. (ΔP)	(kg/cm2)	26.1	
41	TOTAL HEAD (NET)	(m)	461	
42	TOTAL HEAD (TAKE)	(m)	461	
43	DIFF. PRESS. (ΔP) (TAKE)	(kg/cm2)	26.1	
44	TOTAL DISCH. PRESS. (TAKE)	(kg/cm2G)	26.2	(NOTE 2)
45				
46				
47				
48	**MAX SHUT OFF PRESSURE (NOTE 1)**			
49	MAX. SUC. STATIC HEAD	(m)	20.0	
50	SUC. EQUIP. DESIGN PRESS.	(kg/cm2G)	0.15	
51	MAX. SUC. PRESS.	(kg/cm2G)	1.3	(NOTE 3)
52	DIFF. PRESS. (ΔP) (TAKE)	(kg/cm2)	26.1	
53	SHUTOFF COEFF.	(%)	125	
54	MAX. SHUTOFF PRESS.	(kg/cm2G)	33.9	(NOTE 3)

SKETCH

CASE 1 : TRANSFER TO HP ETHYLENE TANK (GOVERNING)

1 OPERATION + 1 STANDBY, TYPE : VERTICAL SUBMERGED

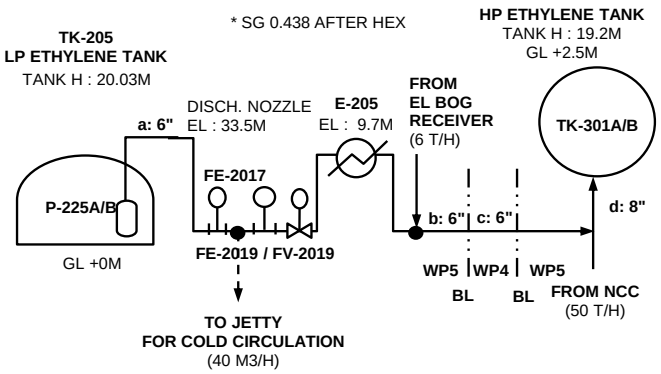

PIPE PRESSURE DROP

PIPING MATERIAL (C.S. or SUS.) : SUS. (3S0Y), C.S (3L1P)

		Suction		Discharge			
SECTION				**a**	**b**	**c**	**d**
FLOW RATE	(m^3/h)			97	139	139	253
PIPE ID	(in)			**6**	**6**	**6**	**8**
PIPE SCH.	(in)			40S	40	40	40
PIPE ID	(mm)			154.05	154.05	154.05	202.72
ROUGHNESS	(mm)			0.015	0.015	0.015	0.015
VELOCITY	(m/s)			**1.448**	**2.076**	**2.076**	**2.181**
REYNOLDS NO.	(-)			701512	2221450	2221450	3071814
FRICTION FACTOR	(-)			0.003	0.003	0.003	0.003
ΔP / 100m	(kg/cm^2)			**0.054**	**0.079**	**0.079**	**0.063**
STRAIGHT LENGTH	(m)			202	172	528	201
NO. OF PIPE ENTRANCE							
NO. OF PIPE EXIT							
NO. OF 90 ELBOW							
NO. OF TEE							
NO. OF GLOBE VALVE							
NO. OF GATE VALVE				4	2		4
NO. OF CHECK VALVE				2			1
NO. OF BUTTER VALVE							
NO. OF BALL VALVE							
NO. OF CONTRACT							
NO. OF ENLARGER							
OTHER Ks							
PIPE ΔP	(kg/cm^2)			0.1100	0.1363	0.4179	0.1265
FITTING ΔP	(kg/cm^2)			0.0121	0.0024	0.0000	0.0127
TOTAL ΔP	(kg/cm^2)			**0.1222**	**0.1387**	**0.4179**	**0.1391**

NOTES

1. Differential shut off pressure at max impeller size shall be lower than pump differential pressure X 1.25.
   Max suction pressure = Max suction static head + Suction equipment design pressure
2. Discharge pressure at the pump impeller.
3. Max suction pressure and dowstream design pressure is applied as 1.5 and 34.1 kg/cm2g on datasheet.

: SELECTED DATA FOR PUMP DATASHEET

PUMP HYDRAULIC CALCULATION SHEET

LOTTE E&C

REV	DATE	BY	CHK'D	APP'D
2	07-Mar-2024	J.H.JUNG	S.K.PARK	C.M.BAE
1	06-Feb-2023	J.H.JUNG	S.K.PARK	C.M.BAE
0	30-Jun-2022	J.H.JUNG	S.K.PARK	C.M.BAE
3	14-Jun-2024	J.H.JUNG	S.K.PARK	C.M.BAE

REVISION

1	PROJECT :	LINE PROJECT	JOB NO. :	15005
2	CLIENT :	PT LOTTE CHEMICAL INDONESIA	DOCU. NO. :	LINE-900-BC-4-0001
3	LOCATION :	CILEGON, INDONESIA	ITEM NO. :	**90-P-225A/B**
4	UNIT :	WP5	NO. REQUIRED :	2 (TWO)
5	SERVICE :	**LP ETHYLENE TRANSFER PUMPS**	SHEET :	2 OF 3

	FLUID			
7	LIQUID PUMPED		LP Ethylene	
8	OPERATING TEMPERATURE	(℃)	-103.6	
9	VISCOSITY @ OP. TEMP.	(cP)	0.18	
10	VAPOR PRESS. @ OP. TEMP.	(kg/cm2A)	1.06	
11	SP. GR. @ OP. TEMP.	(-)	0.566	
12				
13	NORMAL CAPACITY (50 t/h)	(m3/hr)	88	
14	EXCESS RATIO	(%)	10	
15	RATED CAPACITY	(m3/hr)	97	
16	**SUCTION**			
17	PRESS. @ EQUIPMENT	(kg/cm2A) (kg/cm2G)	1.06	0.03
18	MIN. STATIC HEAD	(m)	1.1	
19	PIPE FRICTION	(kg/cm2)	0.000	
20		(kg/cm2)		
21		(kg/cm2)		
22		(kg/cm2)		
23				
24	NET SUC. PRESS.	(kg/cm2A) (kg/cm2G)	1.122	0.09
25	NPSH a @ Suction Nozzle Center	(m)	1.1	
26	**DISCHARGE**			
27	PRESS. @ EQUIP. or BL	(kg/cm2A) (kg/cm2G)	1.23	0.2
28	STATIC HEAD	(m)	33.5	
29	PIPE FRICTION	(kg/cm2)	4.852	
30	FE-2017	(kg/cm2)	0.20	
31	FE-2022	(kg/cm2)	0.20	
32	FE-2020	(kg/cm2)	0.20	
33	FV-2020	(kg/cm2)	18.5	
34	a' PIPE FRICTION	(kg/cm2)	0.12	
35		(kg/cm2)		
36		(kg/cm2)		
37				
38	TOTAL DISCH. PRESS.	(kg/cm2A) (kg/cm2G)	27.2	26.2
39	SUC. PRESS.	(kg/cm2A) (kg/cm2G)	1.1	0.1
40	DIFF. PRESS. (ΔP)	(kg/cm2)	26.1	
41	TOTAL HEAD (NET)	(m)	461	
42	TOTAL HEAD (TAKE)	(m)		
43	DIFF. PRESS. (ΔP) (TAKE)	(kg/cm2)		
44	TOTAL DISCH. PRESS. (TAKE)	(kg/cm2G)		
45				
46				
47				
48	**MAX SHUT OFF PRESSURE (NOTE 1)**			
49	MAX. SUC. STATIC HEAD	(m)		
50	SUC. EQUIP. DESIGN PRESS.	(kg/cm2G)		
51	MAX. SUC. PRESS.	(kg/cm2G)		
52	DIFF. PRESS. (ΔP) (TAKE)	(kg/cm2)		
53	SHUTOFF COEFF.	(%)		
54	MAX. SHUTOFF PRESS.	(kg/cm2G)		

SKETCH

CASE 2 : COLD CIRCULATION FROM/TO JETTY

1 OPERATION + 1 STANDBY, TYPE : VERTICAL SUBMERGED

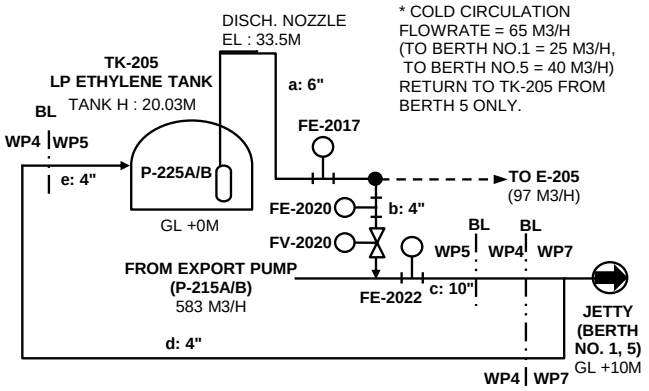

PIPE PRESSURE DROP

PIPING MATERIAL (C.S. or SUS.) : SUS. (3S0Y,1S0Y)

		Suction		Discharge			
SECTION				**b**	**c**	**d**	**e**
FLOW RATE	(m^3/h)			65	648	40	40
PIPE ID	(in)			**4**	**10**	**4**	**4**
PIPE SCH.	(in)			10S	10S	10S	10S
PIPE ID	(mm)			108.20	264.67	108.20	108.20
ROUGHNESS	(mm)			0.015	0.015	0.015	0.015
VELOCITY	(m/s)			**1.964**	**3.272**	**1.208**	**1.208**
REYNOLDS NO.	(-)			668093	2722832	411134	411134
FRICTION FACTOR	(-)			0.004	0.003	0.004	0.004
ΔP / 100m	(kg/cm^2)			**0.148**	**0.137**	**0.059**	**0.059**
STRAIGHT LENGTH	(m)			48	2428	2088	340
NO. OF PIPE ENTRANCE							
NO. OF PIPE EXIT							
NO. OF 90 ELBOW							
NO. OF TEE							
NO. OF GLOBE VALVE							
NO. OF GATE VALVE				3	1	1	3
NO. OF CHECK VALVE				2			1
NO. OF BUTTER VALVE							
NO. OF BALL VALVE							
NO. OF CONTRACT							
NO. OF ENLARGER							
OTHER Ks							
PIPE ΔP	(kg/cm^2)			0.0712	3.3149	1.2335	0.2008
FITTING ΔP	(kg/cm^2)			0.0226	0.0036	0.0006	0.0051
TOTAL ΔP	(kg/cm^2)			**0.0938**	**3.3185**	**1.2340**	**0.2060**

NOTES

1. Differential shut off pressure at max impeller size shall be lower than pump differential pressure X 1.25.
   Max suction pressure = Max suction static head + Suction equipment design pressure
2. Discharge pressure at the pump impeller.

PUMP HYDRAULIC CALCULATION SHEET

LOTTE E&C

REV	DATE	BY	CHK'D	APP'D
2	07-Mar-2024	J.H.JUNG	S.K.PARK	C.M.BAE
1	06-Feb-2023	J.H.JUNG	S.K.PARK	C.M.BAE
0	30-Jun-2022	J.H.JUNG	S.K.PARK	C.M.BAE
3	14-Jun-2024	J.H.JUNG	S.K.PARK	C.M.BAE

REVISION

PROJECT	:	LINE PROJECT	JOB NO.	: 15005
CLIENT	:	PT LOTTE CHEMICAL INDONESIA	DOCU. NO.	: LINE-900-BC-4-0001
LOCATION	:	CILEGON, INDONESIA	ITEM NO.	: **90-P-225A/B**
UNIT	:	WP5	NO. REQUIRED	: 2 (TWO)
SERVICE	:	**LP ETHYLENE TRANSFER PUMPS**	SHEET	: 3 OF 3

FLUID

LIQUID PUMPED		LP Ethylene
OPERATING TEMPERATURE	(℃)	-103.6
VISCOSITY @ OP. TEMP.	(cP)	0.18
VAPOR PRESS. @ OP. TEMP.	(kg/cm2A)	1.06
SP. GR. @ OP. TEMP.	(-)	0.566
NORMAL CAPACITY (50 t/h)	(m3/hr)	88
EXCESS RATIO	(%)	10
RATED CAPACITY	(m3/hr)	97

SUCTION

PRESS. @ EQUIPMENT (kg/cm2A)	(kg/cm2G)	
MIN. STATIC HEAD	(m)	
PIPE FRICTION	(kg/cm2)	
	(kg/cm2)	
	(kg/cm2)	
	(kg/cm2)	
NET SUC. PRESS. (kg/cm2A)	(kg/cm2G)	
NPSH a @ Suction Nozzle Center	(m)	

DISCHARGE

PRESS. @ EQUIP. or BL (kg/cm2A)	(kg/cm2G)	
STATIC HEAD	(m)	
PIPE FRICTION	(kg/cm2)	
	(kg/cm2)	
	(kg/cm2)	
	(kg/cm2)	
	(kg/cm2)	
	(kg/cm2)	
	(kg/cm2)	
TOTAL DISCH. PRESS. (kg/cm2A)	(kg/cm2G)	
SUC. PRESS. (kg/cm2A)	(kg/cm2G)	
DIFF. PRESS. (ΔP)	(kg/cm2)	
TOTAL HEAD (NET)	(m)	
TOTAL HEAD (TAKE)	(m)	
DIFF. PRESS. (ΔP) (TAKE)	(kg/cm2)	
TOTAL DISCH. PRESS. (TAKE)	(kg/cm2G)	

MAX SHUT OFF PRESSURE (NOTE 1)

MAX. SUC. STATIC HEAD	(m)	
SUC. EQUIP. DESIGN PRESS.	(kg/cm2G)	
MAX. SUC. PRESS.	(kg/cm2G)	
DIFF. PRESS. (ΔP) (TAKE)	(kg/cm2)	
SHUTOFF COEFF.	(%)	
MAX. SHUTOFF PRESS.	(kg/cm2G)	

SKETCH

PUMP MINIMUM FLOW LINE

1 OPERATION + 1 STANDBY, TYPE : VERTICAL SUBMERGED

MINIMUM FLOWRATE IS VENDOR DATA .

PUMP MINIMUM FLOWRATE =	42	m3/hr	
PUMP DISCH. P. AS PER CURVE =	28.1	kg/cm2g	(1)
SUCTION EQUIPMENT PRESS. =	0.03	kg/cm2g	(2)
SUCTION EQUIPMENT HEAD =	33.5	m	(NOTE 2)
	1.90	kg/cm2	(3)
PIPE FRICTION =	0.12	kg/cm2	(4)
FE-2017 DEL P =	0.20	kg/cm2	(5)
OTHERS DEL P =		kg/cm2	(6)
OTHERS DEL P =		kg/cm2	(7)
FV-2017 DEL P =	**25.9**	**kg/cm2**	(8)

(8) = (1) - (2) - (3) - (4) - (5) - (6) - (7)

PIPE PRESSURE DROP

PIPING MATERIAL (C.S. or SUS.) : SUS. (3S0Y)

		Suction		Discharge			
SECTION				**a**			
FLOW RATE	(m^3/h)			42			
PIPE ID	(in)			3			
PIPE SCH.	(in)			10S			
PIPE ID	(mm)			82.80			
ROUGHNESS	(mm)			0.015			
VELOCITY	(m/s)			**2.167**			
REYNOLDS NO.	(-)			564117			
FRICTION FACTOR	(-)			0.004			
ΔP / 100m	(kg/cm^2)			**0.247**			
STRAIGHT LENGTH	(m)			50			
NO. OF PIPE ENTRANCE							
NO. OF PIPE EXIT							
NO. OF 90 ELBOW							
NO. OF TEE							
NO. OF GLOBE VALVE							
NO. OF GATE VALVE							
NO. OF CHECK VALVE							
NO. OF BUTTER VALVE							
NO. OF BALL VALVE							
NO. OF CONTRACT							
NO. OF ENLARGER							
OTHER Ks							
PIPE ΔP	(kg/cm^2)			0.1235			
FITTING ΔP	(kg/cm^2)			0.0000			
TOTAL ΔP	(kg/cm^2)			**0.1235**			

NOTES

1. Differential shut off pressure at max impeller size shall be lower than pump differential pressure X 1.25.
   Max suction pressure = Max suction static head + Suction equipment design pressure
2. Same as pump discharge nozzle elevation.

PUMP HYDRAULIC CALCULATION SHEET

LOTTE E&C

REV	DATE	BY	CHK'D	APP'D
2	07-Mar-2024	J.H.JUNG	S.K.PARK	C.M.BAE
1	06-Feb-2023	J.H.JUNG	S.K.PARK	C.M.BAE
0	30-Jun-2022	J.H.JUNG	S.K.PARK	C.M.BAE
3	14-Jun-2024	J.H.JUNG	S.K.PARK	C.M.BAE

REVISION

1	PROJECT :	LINE PROJECT	JOB NO. :	15005
2	CLIENT :	PT LOTTE CHEMICAL INDONESIA	DOCU. NO. :	LINE-900-BC-4-0001
3	LOCATION :	CILEGON, INDONESIA	ITEM NO. :	**90-P-228A/B**
4	UNIT :	WP5	NO. REQUIRED :	2 (TWO)
5	SERVICE :	**LP PROPYLENE TRANSFER PUMPS**	SHEET :	1 OF 2

	FLUID			
7	LIQUID PUMPED		LP Propylene	
8	OPERATING TEMPERATURE	(℃)	-46.9	
9	VISCOSITY @ OP. TEMP.	(cP)	0.175	
10	VAPOR PRESS. @ OP. TEMP.	(kg/cm2A)	1.06	
11	SP. GR. @ OP. TEMP.	(-)	0.608	
12				
13	NORMAL CAPACITY (80 t/h)	(m3/hr)	132	
14	EXCESS RATIO	(%)	10	
15	RATED CAPACITY	(m3/hr)	145	
16	**SUCTION**			
17	PRESS. @ EQUIPMENT (kg/cm2A)	(kg/cm2G)	1.06	0.03
18	MIN. STATIC HEAD	(m)	1.6	
19	PIPE FRICTION	(kg/cm2)	0.000	
20		(kg/cm2)		
21		(kg/cm2)		
22		(kg/cm2)		
23				
24	NET SUC. PRESS. (kg/cm2A)	(kg/cm2G)	1.157	0.12
25	NPSH a @ Suction Nozzle Center	(m)	1.6	
26	**DISCHARGE**			
27	PRESS. @ EQUIP. or BL (kg/cm2A)	(kg/cm2G)	19.43	18.4
28	STATIC HEAD	(m)	18.9	
29	PIPE FRICTION	(kg/cm2)	0.752	
30	FE-2025	(kg/cm2)	0.20	
31	E-208	(kg/cm2)	0.70	
32	STATIC HEAD (E-208 INLET)	(kg/cm2)	0.58	
33	STATIC HEAD (E-208 OUTLET)	(kg/cm2)	-0.48	
34	MARGIN	(kg/cm2)	1.20	
35		(kg/cm2)		
36		(kg/cm2)		
37				
38	TOTAL DISCH. PRESS. (kg/cm2A)	(kg/cm2G)	23.3	22.3
39	SUC. PRESS. (kg/cm2A)	(kg/cm2G)	1.2	0.1
40	DIFF. PRESS. (ΔP)	(kg/cm2)	22.2	
41	TOTAL HEAD (NET)	(m)	365	
42	TOTAL HEAD (TAKE)	(m)	365	
43	DIFF. PRESS. (ΔP) (TAKE)	(kg/cm2)	22.2	
44	TOTAL DISCH. PRESS. (TAKE)	(kg/cm2G)	22.3	(NOTE 2)
45				
46				
47				
48	**MAX SHUT OFF PRESSURE (NOTE 1)**			
49	MAX. SUC. STATIC HEAD	(m)	22.0	
50	SUC. EQUIP. DESIGN PRESS.	(kg/cm2G)	0.15	
51	MAX. SUC. PRESS.	(kg/cm2G)	1.5	
52	DIFF. PRESS. (ΔP) (TAKE)	(kg/cm2)	22.2	
53	SHUTOFF COEFF.	(%)	125	
54	MAX. SHUTOFF PRESS.	(kg/cm2G)	29.2	

SKETCH

CASE : TRANSFER TO HP PROPYLENE TANK

1 OPERATION + 1 STANDBY, TYPE : VERTICAL SUBMERGED

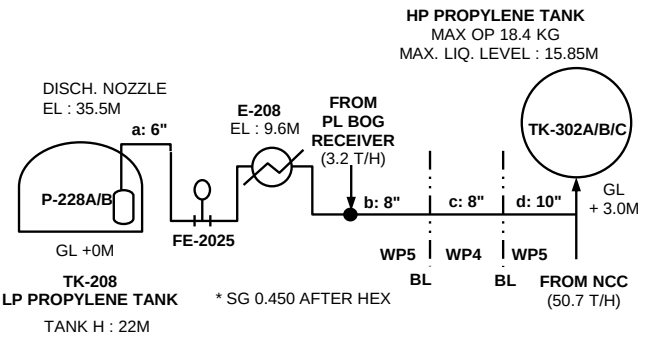

PIPE PRESSURE DROP

PIPING MATERIAL (C.S. or SUS.) : C.S. (3L1P)

		Suction		Discharge			
SECTION				**a**	**b**	**c**	**d**
FLOW RATE	(m^3/h)			145	203	203	316
PIPE ID	(in)			**6**	**8**	**8**	**10**
PIPE SCH.	(in)			40	40	40	40
PIPE ID	(mm)			154.05	202.72	202.72	254.51
ROUGHNESS	(mm)			0.046	0.046	0.046	0.046
VELOCITY	(m/s)			**2.164**	**1.750**	**1.750**	**1.725**
REYNOLDS NO.	(-)			1158183	1721382	1721382	2130976
FRICTION FACTOR	(-)			0.004	0.004	0.004	0.003
ΔP / 100m	(kg/cm^2)			**0.147**	**0.056**	**0.056**	**0.042**
STRAIGHT LENGTH	(m)			158	190	528	196
NO. OF PIPE ENTRANCE							
NO. OF PIPE EXIT							
NO. OF 90 ELBOW							
NO. OF TEE							
NO. OF GLOBE VALVE							
NO. OF GATE VALVE				2	1		3
NO. OF CHECK VALVE				2			1
NO. OF BUTTER VALVE							
NO. OF BALL VALVE							
NO. OF CONTRACT							
NO. OF ENLARGER							
OTHER Ks							
PIPE ΔP	(kg/cm^2)			0.2320	0.1070	0.2971	0.0814
FITTING ΔP	(kg/cm^2)			0.0255	0.0009	0.0000	0.0078
TOTAL ΔP	(kg/cm^2)			**0.2574**	**0.1080**	**0.2971**	**0.0892**

NOTES

1. Differential shut off pressure at max impeller size shall be lower than pump differential pressure X 1.25.
   Max suction pressure = Max suction static head + Suction equipment design pressure
2. Discharge pressure at the pump impeller.

: SELECTED DATA FOR PUMP DATASHEET

PUMP HYDRAULIC CALCULATION SHEET

LOTTE E&C

REV	DATE	BY	CHK'D	APP'D
2	07-Mar-2024	J.H.JUNG	S.K.PARK	C.M.BAE
1	06-Feb-2023	J.H.JUNG	S.K.PARK	C.M.BAE
0	30-Jun-2022	J.H.JUNG	S.K.PARK	C.M.BAE
3	14-Jun-2024	J.H.JUNG	S.K.PARK	C.M.BAE

REVISION

1	PROJECT :	LINE PROJECT	JOB NO. :	15005
2	CLIENT :	PT LOTTE CHEMICAL INDONESIA	DOCU. NO. :	LINE-900-BC-4-0001
3	LOCATION :	CILEGON, INDONESIA	ITEM NO. :	**90-P-228A/B**
4	UNIT :	WP5	NO. REQUIRED :	2 (TWO)
5	SERVICE :	**LP PROPYLENE TRANSFER PUMPS**	SHEET :	2 OF 2

	FLUID		
7	LIQUID PUMPED		LP Propylene
8	OPERATING TEMPERATURE	(℃)	-46.9
9	VISCOSITY @ OP. TEMP.	(cP)	0.175
10	VAPOR PRESS. @ OP. TEMP.	(kg/cm2A)	1.06
11	SP. GR. @ OP. TEMP.	(-)	0.608
12			
13	NORMAL CAPACITY (80 t/h)	(m3/hr)	132
14	EXCESS RATIO	(%)	10
15	RATED CAPACITY	(m3/hr)	145
16	**SUCTION**		
17	PRESS. @ EQUIPMENT (kg/cm2A)	(kg/cm2G)	
18	MIN. STATIC HEAD	(m)	
19	PIPE FRICTION	(kg/cm2)	
20		(kg/cm2)	
21		(kg/cm2)	
22		(kg/cm2)	
23			
24	NET SUC. PRESS. (kg/cm2A)	(kg/cm2G)	
25	NPSH a @ Suction Nozzle Center	(m)	
26	**DISCHARGE**		
27	PRESS. @ EQUIP. or BL (kg/cm2A)	(kg/cm2G)	
28	STATIC HEAD	(m)	
29	PIPE FRICTION	(kg/cm2)	
30		(kg/cm2)	
31		(kg/cm2)	
32		(kg/cm2)	
33		(kg/cm2)	
34		(kg/cm2)	
35		(kg/cm2)	
36		(kg/cm2)	
37			
38	TOTAL DISCH. PRESS. (kg/cm2A)	(kg/cm2G)	
39	SUC. PRESS. (kg/cm2A)	(kg/cm2G)	
40	DIFF. PRESS. (ΔP)	(kg/cm2)	
41	TOTAL HEAD (NET)	(m)	
42	TOTAL HEAD (TAKE)	(m)	
43	DIFF. PRESS. (ΔP) (TAKE)	(kg/cm2)	
44	TOTAL DISCH. PRESS. (TAKE)	(kg/cm2G)	
45			
46			
47			
48	**MAX SHUT OFF PRESSURE (NOTE 1)**		
49	MAX. SUC. STATIC HEAD	(m)	
50	SUC. EQUIP. DESIGN PRESS.	(kg/cm2G)	
51	MAX. SUC. PRESS.	(kg/cm2G)	
52	DIFF. PRESS. (ΔP) (TAKE)	(kg/cm2)	
53	SHUTOFF COEFF.	(%)	
54	MAX. SHUTOFF PRESS.	(kg/cm2G)	

SKETCH

PUMP MINIMUM FLOW LINE

1 OPERATION + 1 STANDBY, TYPE : VERTICAL SUBMERGED

MINIMUM FLOWRATE IS VENDOR DATA.

PUMP MINIMUM FLOWRATE =	75	m3/hr	
PUMP DISCH. P. AS PER CURVE =	24.1	kg/cm2g	(1)
SUCTION EQUIPMENT PRESS. =	0.03	kg/cm2g	(2)
SUCTION EQUIPMENT HEAD =	35.5	m	(NOTE 2)
	2.16	kg/cm2	(3)
PIPE FRICTION =	0.16	kg/cm2	(4)
FE-2025 DEL P =	0.20	kg/cm2	(5)
OTHERS DEL P =		kg/cm2	(6)
OTHERS DEL P =		kg/cm2	(7)
FV-2025 DEL P =	**21.6**	**kg/cm2**	(8)

(8) = (1) - (2) - (3) - (4) - (5) - (6) - (7)

PIPE PRESSURE DROP

PIPING MATERIAL (C.S. or SUS.) : C.S. (3L1P)

		Suction		Discharge			
SECTION				**a**			
FLOW RATE	(m^3/h)			75			
PIPE ID	(in)			4			
PIPE SCH.	(in)			40			
PIPE ID	(mm)			102.26			
ROUGHNESS	(mm)			0.046			
VELOCITY	(m/s)			**2.537**			
REYNOLDS NO.	(-)			901213			
FRICTION FACTOR	(-)			0.004			
ΔP / 100m	(kg/cm^2)			**0.330**			
STRAIGHT LENGTH	(m)			50			
NO. OF PIPE ENTRANCE							
NO. OF PIPE EXIT							
NO. OF 90 ELBOW							
NO. OF TEE							
NO. OF GLOBE VALVE							
NO. OF GATE VALVE							
NO. OF CHECK VALVE							
NO. OF BUTTER VALVE							
NO. OF BALL VALVE							
NO. OF CONTRACT							
NO. OF ENLARGER							
OTHER Ks							
PIPE ΔP	(kg/cm^2)			0.1649			
FITTING ΔP	(kg/cm^2)			0.0000			
TOTAL ΔP	(kg/cm^2)			**0.1649**			

NOTES

1. Differential shut off pressure at max impeller size shall be lower than pump differential pressure X 1.25.
   Max suction pressure = Max suction static head + Suction equipment design pressure
2. Same as pump discharge nozzle elevation.

PUMP HYDRAULIC CALCULATION SHEET

LOTTE E&C

REV	DATE	BY	CHK'D	APP'D
2	07-Mar-2024	J.H.JUNG	S.K.PARK	C.M.BAE
1	06-Feb-2023	J.H.JUNG	S.K.PARK	C.M.BAE
0	30-Jun-2022	J.H.JUNG	S.K.PARK	C.M.BAE
3	14-Jun-2024	J.H.JUNG	S.K.PARK	C.M.BAE

REVISION

1	PROJECT :	LINE PROJECT	JOB NO. :	15005
2	CLIENT :	PT LOTTE CHEMICAL INDONESIA	DOCU. NO. :	LINE-900-BC-4-0001
3	LOCATION :	CILEGON, INDONESIA	ITEM NO. :	**90-P-240AB**
4	UNIT :	WP5	NO. REQUIRED :	2 (TWO)
5	SERVICE :	**LP STEAM CONDENSATE PUMPS**	SHEET :	1 OF 2

	FLUID			
7	LIQUID PUMPED		Steam Condensate	
8	OPERATING TEMPERATURE	(℃)	140	
9	VISCOSITY @ OP. TEMP.	(cP)	0.2	
10	VAPOR PRESS. @ OP. TEMP.	(kg/cm2A)	3.7	
11	SP. GR. @ OP. TEMP.	(-)	0.926	
12				
13	NORMAL CAPACITY	(m3/hr)	35	
14	EXCESS RATIO	(%)	10	
15	RATED CAPACITY	(m3/hr)	39	
16	**SUCTION**			
17	PRESS. @ EQUIPMENT	(kg/cm2A) (kg/cm2G)	3.70	2.7
18	MIN. STATIC HEAD	(m)	4.3	
19	PIPE FRICTION	(kg/cm2)	0.080	
20	STRAINER	(kg/cm2)	0.07	
21		(kg/cm2)		
22		(kg/cm2)		
23				
24	NET SUC. PRESS.	(kg/cm2A) (kg/cm2G)	3.948	2.9
25	NPSH a @ Suction Nozzle Center	(m)	2.7	
26	**DISCHARGE**			
27	PRESS. @ EQUIP. or BL	(kg/cm2A) (kg/cm2G)	4.81	3.8
28	STATIC HEAD	(m)	4.7	
29	PIPE FRICTION	(kg/cm2)	0.486	
30	FE-2009	(kg/cm2)	0.20	
31	LV-2004	(kg/cm2)	0.98	
32		(kg/cm2)		
33		(kg/cm2)		
34		(kg/cm2)		
35		(kg/cm2)		
36		(kg/cm2)		
37				
38	TOTAL DISCH. PRESS.	(kg/cm2A) (kg/cm2G)	6.9	5.9
39	SUC. PRESS.	(kg/cm2A) (kg/cm2G)	3.9	2.9
40	DIFF. PRESS. (ΔP)	(kg/cm2)	3.0	
41	TOTAL HEAD (NET)	(m)	32	
42	TOTAL HEAD (TAKE)	(m)	32	
43	DIFF. PRESS. (ΔP) (TAKE)	(kg/cm2)	3.0	
44	TOTAL DISCH. PRESS. (TAKE)	(kg/cm2G)	5.9	
45				
46				
47				
48	**MAX SHUT OFF PRESSURE (NOTE 1)**			
49	MAX. SUC. STATIC HEAD	(m)	6.0	(NOTE 2)
50	SUC. EQUIP. DESIGN PRESS.	(kg/cm2G)	6.0	
51	MAX. SUC. PRESS.	(kg/cm2G)	6.6	
52	DIFF. PRESS. (ΔP) (TAKE)	(kg/cm2)	3.0	
53	SHUTOFF COEFF.	(%)	125	
54	MAX. SHUTOFF PRESS.	(kg/cm2G)	10.3	

SKETCH

CASE : CONDENSATE TRANSFER TO HEADER

1 OPERATION + 1 STANDBY, TYPE : HORIZONTAL CENTRIFUGAL

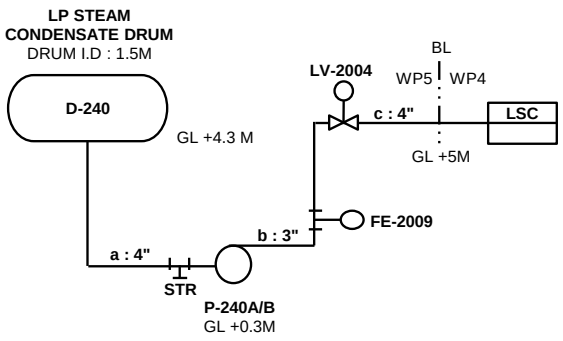

PIPE PRESSURE DROP

PIPING MATERIAL (C.S. or SUS.) : C.S. (1C1W)

		Suction		Discharge			
SECTION		**a**		**b**	**c**		
FLOW RATE	(m^3/h)	39		39	39		
PIPE ID	(in)	4		3	4		
PIPE SCH.	(in)	40		40	40		
PIPE ID	(mm)	102.26		77.93	102.26		
ROUGHNESS	(mm)	0.046		0.046	0.046		
VELOCITY	(m/s)	**1.302**		**2.242**	**1.302**		
REYNOLDS NO.	(-)	616513		808991	616513		
FRICTION FACTOR	(-)	0.004		0.004	0.004		
ΔP / 100m	(kg/cm^2)	**0.134**		**0.545**	**0.134**		
STRAIGHT LENGTH	(m)	50		48	144		
NO. OF PIPE ENTRANCE							
NO. OF PIPE EXIT							
NO. OF 90 ELBOW		5					
NO. OF TEE							
NO. OF GLOBE VALVE							
NO. OF GATE VALVE		3		3			
NO. OF CHECK VALVE				1			
NO. OF BUTTER VALVE							
NO. OF BALL VALVE							
NO. OF CONTRACT							
NO. OF ENLARGER							
OTHER Ks							
PIPE ΔP	(kg/cm^2)	0.0672		0.2614	0.1934		
FITTING ΔP	(kg/cm^2)	0.0129		0.0307	0.0000		
TOTAL ΔP	(kg/cm^2)	**0.0801**		**0.2921**	**0.1934**		

NOTES

1. Differential shut off pressure at max impeller size shall be lower than pump differential pressure X 1.25.
   Max suction pressure = Max suction static head + Suction equipment design pressure
2. Max suction static head is assumed as 6.0m for max shut off pressure.

: SELECTED DATA FOR PUMP DATASHEET

PUMP HYDRAULIC CALCULATION SHEET

LOTTE E&C

REV	DATE	BY	CHK'D	APP'D
2	07-Mar-2024	J.H.JUNG	S.K.PARK	C.M.BAE
1	06-Feb-2023	J.H.JUNG	S.K.PARK	C.M.BAE
0	30-Jun-2022	J.H.JUNG	S.K.PARK	C.M.BAE
3	14-Jun-2024	J.H.JUNG	S.K.PARK	C.M.BAE

REVISION

PROJECT	:	LINE PROJECT	JOB NO.	: 15005
CLIENT	:	PT LOTTE CHEMICAL INDONESIA	DOCU. NO.	: LINE-900-BC-4-0001
LOCATION	:	CILEGON, INDONESIA	ITEM NO.	: **90-P-240AB**
UNIT	:	WP5	NO. REQUIRED	: 2 (TWO)
SERVICE	:	**LP STEAM CONDENSATE PUMPS**	SHEET	: 2 OF 2

FLUID

LIQUID PUMPED		Steam Condensate
OPERATING TEMPERATURE	(℃)	140
VISCOSITY @ OP. TEMP.	(cP)	0.2
VAPOR PRESS. @ OP. TEMP.	(kg/cm2A)	3.7
SP. GR. @ OP. TEMP.	(-)	0.926
NORMAL CAPACITY	(m3/hr)	35
EXCESS RATIO	(%)	10
RATED CAPACITY	(m3/hr)	39

SUCTION

PRESS. @ EQUIPMENT	(kg/cm2A) (kg/cm2G)	
MIN. STATIC HEAD	(m)	
PIPE FRICTION	(kg/cm2)	
	(kg/cm2)	
	(kg/cm2)	
	(kg/cm2)	
NET SUC. PRESS.	(kg/cm2A) (kg/cm2G)	
NPSH a @ Suction Nozzle Center	(m)	

DISCHARGE

PRESS. @ EQUIP. or BL	(kg/cm2A) (kg/cm2G)	
STATIC HEAD	(m)	
PIPE FRICTION	(kg/cm2)	
	(kg/cm2)	
	(kg/cm2)	
	(kg/cm2)	
	(kg/cm2)	
	(kg/cm2)	
	(kg/cm2)	
TOTAL DISCH. PRESS.	(kg/cm2A) (kg/cm2G)	
SUC. PRESS.	(kg/cm2A) (kg/cm2G)	
DIFF. PRESS. (ΔP)	(kg/cm2)	
TOTAL HEAD (NET)	(m)	
TOTAL HEAD (TAKE)	(m)	
DIFF. PRESS. (ΔP) (TAKE)	(kg/cm2)	
TOTAL DISCH. PRESS. (TAKE)	(kg/cm2G)	

MAX SHUT OFF PRESSURE (NOTE 1)

MAX. SUC. STATIC HEAD	(m)	
SUC. EQUIP. DESIGN PRESS.	(kg/cm2G)	
MAX. SUC. PRESS.	(kg/cm2G)	
DIFF. PRESS. (ΔP) (TAKE)	(kg/cm2)	
SHUTOFF COEFF.	(%)	
MAX. SHUTOFF PRESS.	(kg/cm2G)	

SKETCH

PUMP MINIMUM FLOW LINE

1 OPERATION + 1 STANDBY, TYPE : HORIZONTAL CENTRIFUGAL

MINIMUM FLOWRATE IS VENDOR DATA.

PUMP MINIMUM FLOWRATE =	9.3	m3/hr	
PUMP DISCH. P. AS PER CURVE =	6.2	kg/cm2g	(1)
SUCTION EQUIPMENT PRESS. =	2.67	kg/cm2g	(2)
SUCTION EQUIPMENT HEAD =	5.8	m	
	0.54	kg/cm2	(3)
PIPE FRICTION =	0.36	kg/cm2	(4)
FE-2009 DEL P =	0.20	kg/cm2	(5)
OTHERS DEL P =		kg/cm2	(6)
OTHERS DEL P =		kg/cm2	(7)
FV-2009 DEL P =	**2.5**	**kg/cm2**	(8)

(8) = (1) - (2) - (3) - (4) - (5) - (6) - (7)

PIPE PRESSURE DROP

PIPING MATERIAL (C.S. or SUS.) : C.S. (1C1S)

		Suction		Discharge			
SECTION				**a**			
FLOW RATE	(m^3/h)			9.3			
PIPE ID	(in)			2			
PIPE SCH.	(in)			80			
PIPE ID	(mm)			49.25			
ROUGHNESS	(mm)			0.046			
VELOCITY	(m/s)			**1.356**			
REYNOLDS NO.	(-)			309218			
FRICTION FACTOR	(-)			0.005			
ΔP / 100m	(kg/cm^2)			**0.358**			
STRAIGHT LENGTH	(m)			100			
NO. OF PIPE ENTRANCE							
NO. OF PIPE EXIT							
NO. OF 90 ELBOW							
NO. OF TEE							
NO. OF GLOBE VALVE							
NO. OF GATE VALVE							
NO. OF CHECK VALVE							
NO. OF BUTTER VALVE							
NO. OF BALL VALVE							
NO. OF CONTRACT							
NO. OF ENLARGER							
OTHER Ks							
PIPE ΔP	(kg/cm^2)			0.3577			
FITTING ΔP	(kg/cm^2)			0.0000			
TOTAL ΔP	(kg/cm^2)			**0.3577**			

NOTES

1. Differential shut off pressure at max impeller size shall be lower than pump differential pressure X 1.25.
   Max suction pressure = Max suction static head + Suction equipment design pressure

PUMP HYDRAULIC CALCULATION SHEET

LOTTE E&C

REV	DATE	BY	CHK'D	APP'D
2	07-Mar-2024	J.H.JUNG	S.K.PARK	C.M.BAE
1	06-Feb-2023	J.H.JUNG	S.K.PARK	C.M.BAE
0	30-Jun-2022	J.H.JUNG	S.K.PARK	C.M.BAE
3	14-Jun-2024	J.H.JUNG	S.K.PARK	C.M.BAE

REVISION

1	PROJECT :	LINE PROJECT	JOB NO. :	15005
2	CLIENT :	PT LOTTE CHEMICAL INDONESIA	DOCU. NO. :	LINE-900-BC-4-0001
3	LOCATION :	CILEGON, INDONESIA	ITEM NO. :	**90-P-260A/B**
4	UNIT :	WP5	NO. REQUIRED :	2 (TWO)
5	SERVICE :	**SANITARY PUMPS FOR OPERATOR SHELTER**	SHEET :	1 OF 1

6	**FLUID**			
7	LIQUID PUMPED		Sanitary Water	
8	OPERATING TEMPERATURE	(℃)	22.7	AMB
9	VISCOSITY @ OP. TEMP.	(cP)	0.89	
10	VAPOR PRESS. @ OP. TEMP.	(kg/cm2A)	0.032	
11	SP. GR. @ OP. TEMP.	(-)	0.997	
12				
13	NORMAL CAPACITY	(m3/hr)	-	
14	EXCESS RATIO	(%)	-	
15	RATED CAPACITY	(m3/hr)	5	
16	**SUCTION**			
17	PRESS. @ EQUIPMENT	(kg/cm2A) (kg/cm2G)	1.03	0.00
18	MIN. STATIC HEAD	(m)	-5.3	
19	PIPE FRICTION	(kg/cm2)	0.017	
20	STRAINER	(kg/cm2)	0.07	
21		(kg/cm2)		
22		(kg/cm2)		
23				
24	NET SUC. PRESS.	(kg/cm2A) (kg/cm2G)	0.417	-0.6
25	NPSH a @Suction Nozzle Center	(m)	3.9	
26	**DISCHARGE**			
27	PRESS. @ EQUIP. or BL	(kg/cm2A) (kg/cm2G)	1.03	0.00
28	STATIC HEAD	(m)	6.7	
29	PIPE FRICTION	(kg/cm2)	2.121	
30		(kg/cm2)		
31		(kg/cm2)		
32		(kg/cm2)		
33		(kg/cm2)		
34		(kg/cm2)		
35		(kg/cm2)		
36		(kg/cm2)		
37				
38	TOTAL DISCH. PRESS.	(kg/cm2A) (kg/cm2G)	3.8	2.8
39	SUC. PRESS.	(kg/cm2A) (kg/cm2G)	0.4	-0.6
40	DIFF. PRESS. (ΔP)	(kg/cm2)	3.4	
41	TOTAL HEAD (NET)	(m)	34	
42	TOTAL HEAD (TAKE)	(m)	34	
43	DIFF. PRESS. (ΔP) (TAKE)	(kg/cm2)	3.4	
44	TOTAL DISCH. PRESS. (TAKE)	(kg/cm2G)	2.8	
45				
46				
47				
48	**MAX SHUT OFF PRESSURE (NOTE 1)**			
49	MAX. SUC. STATIC HEAD	(m)	0.0	
50	SUC. EQUIP. DESIGN PRESS.	(kg/cm2G)	0.0	
51	MAX. SUC. PRESS.	(kg/cm2G)	0.0	
52	DIFF. PRESS. (ΔP) (TAKE)	(kg/cm2)	3.4	
53	SHUTOFF COEFF.	(%)	125	
54	MAX. SHUTOFF PRESS.	(kg/cm2G)	4.3	

SKETCH

CASE : SANITARY SEWER TRANSFER TO WWT PKG

1 OPERATION + 1 STANDBY, TYPE : SELF-PRIMING

(HIGH HIGH LEVEL : STANDBY PUMP STARTS)

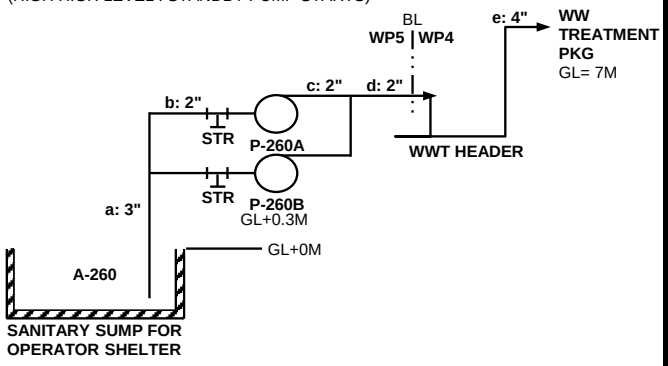

PIPE PRESSURE DROP

PIPING MATERIAL (C.S. or SUS.) : C.S. (1R0W)

		Suction		Discharge		
SECTION		**a**	**b**	**c**	**d**	**e**
FLOW RATE	(m^3/h)	10	5	5	10	40
PIPE ID	(in)	3	2	2	2	4
PIPE SCH.	(in)					
PIPE ID	(mm)	80.00	50.00	50.00	50.00	100.00
ROUGHNESS	(mm)	0.046	0.046	0.046	0.046	0.046
VELOCITY	(m/s)	**0.553**	**0.707**	**0.707**	**1.415**	**1.415**
REYNOLDS NO.	(-)	49525	39620	39620	79240	158479
FRICTION FACTOR	(-)	0.006	0.006	0.006	0.006	0.005
ΔP / 100m	(kg/cm^2)	**0.044**	**0.125**	**0.125**	**0.457**	**0.194**
STRAIGHT LENGTH	(m)	10	10	10	50	968
NO. OF PIPE ENTRANCE						
NO. OF PIPE EXIT						
NO. OF 90 ELBOW						
NO. OF TEE						
NO. OF GLOBE VALVE						
NO. OF GATE VALVE			1	1		
NO. OF CHECK VALVE				1		
NO. OF BUTTER VALVE						
NO. OF BALL VALVE						
NO. OF CONTRACT						
NO. OF ENLARGER						
OTHER Ks						
PIPE ΔP	(kg/cm^2)	0.0044	0.0125	0.0125	0.2284	1.8774
FITTING ΔP	(kg/cm^2)	0.0000	0.0004	0.0028	0.0000	0.0000
TOTAL ΔP	(kg/cm^2)	**0.0044**	**0.0129**	**0.0153**	**0.2284**	**1.8774**

NOTES

1. Differential shut off pressure at max impeller size shall be lower than pump differential pressure X 1.25.
   Max suction pressure = Max suction static head + Suction equipment design pressure
2. Discharge pressure at the outlet nozzle (grade).

: SELECTED DATA FOR PUMP DATASHEET

PUMP HYDRAULIC CALCULATION SHEET

LOTTE E&C

REV	DATE	BY	CHK'D	APP'D
2	07-Mar-2024	J.H.JUNG	S.K.PARK	C.M.BAE
1	06-Feb-2023	J.H.JUNG	S.K.PARK	C.M.BAE
0	30-Jun-2022	J.H.JUNG	S.K.PARK	C.M.BAE
3	14-Jun-2024	J.H.JUNG	S.K.PARK	C.M.BAE

REVISION

1	PROJECT :	LINE PROJECT	JOB NO. :	15005
2	CLIENT :	PT LOTTE CHEMICAL INDONESIA	DOCU. NO. :	LINE-900-BC-4-0001
3	LOCATION :	CILEGON, INDONESIA	ITEM NO. :	**90-P-301A/B/C**
4	UNIT :	WP5	NO. REQUIRED :	3 (THREE)
5	SERVICE :	**HP ETHYLENE FEED PUMPS**	SHEET :	1 OF 5

	FLUID			
7	LIQUID PUMPED		HP ETHYLENE	
8	OPERATING TEMPERATURE	(℃)	-30.3	
9	VISCOSITY @ OP. TEMP.	(cP)	0.063	
10	VAPOR PRESS. @ OP. TEMP.	(kg/cm2A)	19.6	
11	SP. GR. @ OP. TEMP.	(-)	0.435	
12				
13	NORMAL CAPACITY (30 t/h)	(m3/hr)	69	
14	EXCESS RATIO	(%)	10	
15	RATED CAPACITY	(m3/hr)	76	
16	**SUCTION**			
17	PRESS. @ EQUIPMENT	(kg/cm2A) (kg/cm2G)	19.63	18.6
18	MIN. STATIC HEAD	(m)	3.5	(NOTE 2)
19	PIPE FRICTION	(kg/cm2)	0.014	
20	STRAINER	(kg/cm2)	0.07	
21		(kg/cm2)		
22		(kg/cm2)		
23				
24	NET SUC. PRESS.	(kg/cm2A) (kg/cm2G)	19.705	18.7
25	NPSH a @ Suction Nozzle Center	(m)	1.7	
26	**DISCHARGE**			
27	PRESS. @ EQUIP. or BL	(kg/cm2A) (kg/cm2G)	39.05	38.0
28	STATIC HEAD	(m)	2.5	E301 EL
29	PIPE FRICTION	(kg/cm2)	0.059	
30	FE-3002	(kg/cm2)	0.12	
31	FE-3003	(kg/cm2)	0.12	
32	E-301	(kg/cm2)	0.60	
33	E-341	(kg/cm2)	0.40	
34	VAPOR LINE LOSS (SECTION e,f,g)	(kg/cm2)	0.08	
35	PV-3006	(kg/cm2)	0.10	
36		(kg/cm2)		
37				
38	TOTAL DISCH. PRESS.	(kg/cm2A) (kg/cm2G)	40.6	39.6
39	SUC. PRESS.	(kg/cm2A) (kg/cm2G)	19.7	18.7
40	DIFF. PRESS. (ΔP)	(kg/cm2)	20.9	
41	TOTAL HEAD (NET)	(m)	481	
42	TOTAL HEAD (TAKE)	(m)		
43	DIFF. PRESS. (ΔP) (TAKE)	(kg/cm2)		
44	TOTAL DISCH. PRESS. (TAKE)	(kg/cm2G)		
45				
46				
47				
48	**MAX SHUT OFF PRESSURE (NOTE 1)**			
49	MAX. SUC. STATIC HEAD	(m)		
50	SUC. EQUIP. DESIGN PRESS.	(kg/cm2G)		
51	MAX. SUC. PRESS.	(kg/cm2G)		
52	DIFF. PRESS. (ΔP) (TAKE)	(kg/cm2)		
53	SHUTOFF COEFF.	(%)		
54	MAX. SHUTOFF PRESS.	(kg/cm2G)		

SKETCH

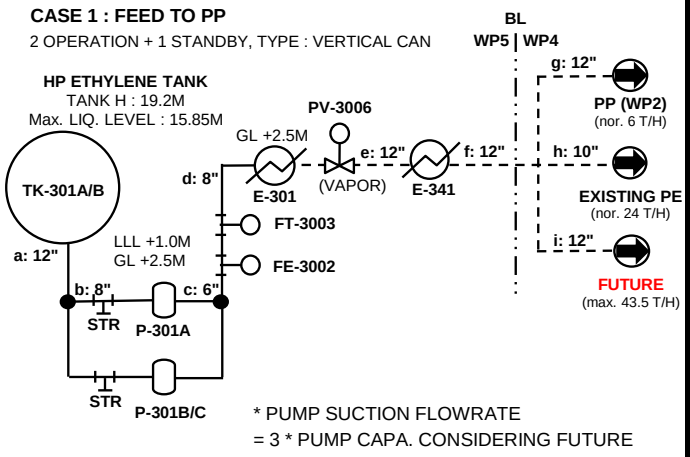

* PUMP SUCTION FLOWRATE
= 3 * PUMP CAPA. CONSIDERING FUTURE

PIPE PRESSURE DROP

PIPING MATERIAL (C.S. or SUS.) : C.S. (3L1P)

		Suction		Discharge			
SECTION		**a**	**b**	**c**	**d**		
FLOW RATE	(m^3/h)	228	76	76	152		
PIPE ID	(in)	**12**	**8**	**6**	**8**		
PIPE SCH.	(in)	40	40	40	40		
PIPE ID	(mm)	303.22	202.72	154.05	202.72		
ROUGHNESS	(mm)	0.046	0.046	0.046	0.046		
VELOCITY	(m/s)	**0.876**	**0.653**	**1.131**	**1.306**		
REYNOLDS NO.	(-)	1833836	914325	1203193	1828650		
FRICTION FACTOR	(-)	0.003	0.004	0.004	0.004		
ΔP / 100m	(kg/cm^2)	**0.008**	**0.007**	**0.029**	**0.027**		
STRAIGHT LENGTH	(m)	156	19	19	185		
NO. OF PIPE ENTRANCE							
NO. OF PIPE EXIT							
NO. OF 90 ELBOW							
NO. OF TEE							
NO. OF GLOBE VALVE							
NO. OF GATE VALVE		3	1	2			
NO. OF CHECK VALVE				1			
NO. OF BUTTER VALVE							
NO. OF BALL VALVE							
NO. OF CONTRACT							
NO. OF ENLARGER							
OTHER Ks							
PIPE ΔP	(kg/cm^2)	0.0120	0.0013	0.0055	0.0504		
FITTING ΔP	(kg/cm^2)	0.0006	0.0001	0.0028	0.0000		
TOTAL ΔP	(kg/cm^2)	**0.0125**	**0.0015**	**0.0083**	**0.0504**		

NOTES

1. Differential shut off pressure at max impeller size shall be lower than pump differential pressure X 1.25.
   Max suction pressure = Max suction static head + Suction equipment design pressure
2. LLL is considered for NPSHa.

: SELECTED DATA FOR PUMP DATASHEET

PUMP HYDRAULIC CALCULATION SHEET

LOTTE E&C

REV	DATE	BY	CHK'D	APP'D
2	07-Mar-2024	J.H.JUNG	S.K.PARK	C.M.BAE
1	06-Feb-2023	J.H.JUNG	S.K.PARK	C.M.BAE
0	30-Jun-2022	J.H.JUNG	S.K.PARK	C.M.BAE
3	14-Jun-2024	J.H.JUNG	S.K.PARK	C.M.BAE

REVISION

1	PROJECT :	LINE PROJECT	JOB NO. :	15005
2	CLIENT :	PT LOTTE CHEMICAL INDONESIA	DOCU. NO. :	LINE-900-BC-4-0001
3	LOCATION :	CILEGON, INDONESIA	ITEM NO. :	**90-P-301A/B/C**
4	UNIT :	WP5	NO. REQUIRED :	3 (THREE)
5	SERVICE :	**HP ETHYLENE FEED PUMPS**	SHEET :	2 OF 5

FLUID

7	LIQUID PUMPED		HP ETHYLENE	
8	OPERATING TEMPERATURE	(℃)	-30.3	
9	VISCOSITY @ OP. TEMP.	(cP)	0.063	
10	VAPOR PRESS. @ OP. TEMP.	(kg/cm2A)	19.6	
11	SP. GR. @ OP. TEMP.	(-)	0.435	
12				
13	NORMAL CAPACITY (30 t/h)	(m3/hr)	69	
14	EXCESS RATIO	(%)	10	
15	RATED CAPACITY	(m3/hr)	76	
16	**SUCTION**			
17	PRESS. @ EQUIPMENT	(kg/cm2A) (kg/cm2G)	19.63	18.6
18	MIN. STATIC HEAD	(m)	3.5	(NOTE 2)
19	PIPE FRICTION	(kg/cm2)	0.014	
20	STRAINER	(kg/cm2)	0.07	
21		(kg/cm2)		
22		(kg/cm2)		
23				
24	NET SUC. PRESS.	(kg/cm2A) (kg/cm2G)	19.705	18.7
25	NPSH a @ Suction Nozzle Center	(m)	1.7	
26	**DISCHARGE**			
27	PRESS. @ EQUIP. or BL	(kg/cm2A) (kg/cm2G)	38.89	37.9
28	STATIC HEAD	(m)	2.5	
29	PIPE FRICTION	(kg/cm2)	0.059	
30	FE-3002	(kg/cm2)	0.12	
31	FE-3003	(kg/cm2)	0.12	
32	E-301	(kg/cm2)	0.60	
33	E-341	(kg/cm2)	0.40	
34	VAPOR LINE LOSS (SECTION e,f,h)	(kg/cm2)	0.24	
35	PV-3006	(kg/cm2)	0.10	
36		(kg/cm2)		
37				
38	TOTAL DISCH. PRESS.	(kg/cm2A) (kg/cm2G)	40.6	39.6
39	SUC. PRESS.	(kg/cm2A) (kg/cm2G)	19.7	18.7
40	DIFF. PRESS. (ΔP)	(kg/cm2)	20.9	
41	TOTAL HEAD (NET)	(m)	481	
42	TOTAL HEAD (TAKE)	(m)		
43	DIFF. PRESS. (ΔP) (TAKE)	(kg/cm2)		
44	TOTAL DISCH. PRESS. (TAKE)	(kg/cm2G)		
45				
46				
47				
48	**MAX SHUT OFF PRESSURE (NOTE 1)**			
49	MAX. SUC. STATIC HEAD	(m)		
50	SUC. EQUIP. DESIGN PRESS.	(kg/cm2G)		
51	MAX. SUC. PRESS.	(kg/cm2G)		
52	DIFF. PRESS. (ΔP) (TAKE)	(kg/cm2)		
53	SHUTOFF COEFF.	(%)		
54	MAX. SHUTOFF PRESS.	(kg/cm2G)		

SKETCH

CASE 2 : FEED TO EXISTING PE

2 OPERATION + 1 STANDBY, TYPE : VERTICAL CAN

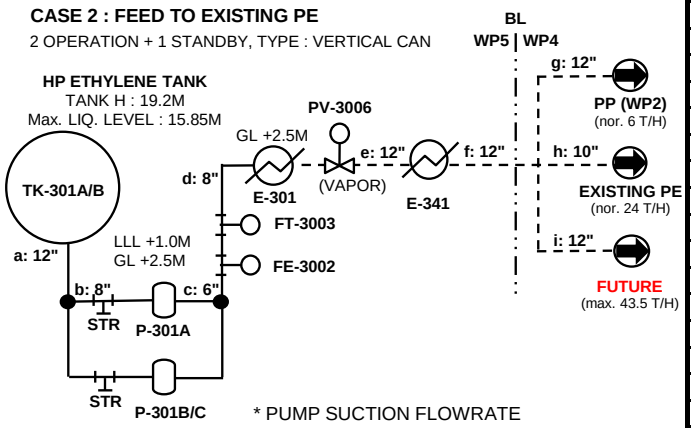

* PUMP SUCTION FLOWRATE
= 3 * PUMP CAPA. CONSIDERING FUTURE

PIPE PRESSURE DROP

PIPING MATERIAL (C.S. or SUS.) : C.S. (3L1P)

		Suction		Discharge			
SECTION		**a**	**b**	**c**	**d**		
FLOW RATE	(m^3/h)	228	76	76	152		
PIPE ID	(in)	**12**	**8**	**6**	**8**		
PIPE SCH.	(in)	40	40	40	40		
PIPE ID	(mm)	303.22	202.72	154.05	202.72		
ROUGHNESS	(mm)	0.046	0.046	0.046	0.046		
VELOCITY	(m/s)	**0.876**	**0.653**	**1.131**	**1.306**		
REYNOLDS NO.	(-)	1833836	914325	1203193	1828650		
FRICTION FACTOR	(-)	0.003	0.004	0.004	0.004		
ΔP / 100m	(kg/cm^2)	**0.008**	**0.007**	**0.029**	**0.027**		
STRAIGHT LENGTH	(m)	156	19	19	185		
NO. OF PIPE ENTRANCE							
NO. OF PIPE EXIT							
NO. OF 90 ELBOW							
NO. OF TEE							
NO. OF GLOBE VALVE							
NO. OF GATE VALVE		3	1	2			
NO. OF CHECK VALVE				1			
NO. OF BUTTER VALVE							
NO. OF BALL VALVE							
NO. OF CONTRACT							
NO. OF ENLARGER							
OTHER Ks							
PIPE ΔP	(kg/cm^2)	0.0120	0.0013	0.0055	0.0504		
FITTING ΔP	(kg/cm^2)	0.0006	0.0001	0.0028	0.0000		
TOTAL ΔP	(kg/cm^2)	**0.0125**	**0.0015**	**0.0083**	**0.0504**		

NOTES

1. Differential shut off pressure at max impeller size shall be lower than pump differential pressure X 1.25.
   Max suction pressure = Max suction static head + Suction equipment design pressure
2. LLL is considered for NPSHa.

: SELECTED DATA FOR PUMP DATASHEET

PUMP HYDRAULIC CALCULATION SHEET

LOTTE E&C

REV	DATE	BY	CHK'D	APP'D
2	07-Mar-2024	J.H.JUNG	S.K.PARK	C.M.BAE
1	06-Feb-2023	J.H.JUNG	S.K.PARK	C.M.BAE
0	30-Jun-2022	J.H.JUNG	S.K.PARK	C.M.BAE
3	14-Jun-2024	J.H.JUNG	S.K.PARK	C.M.BAE

REVISION

1	PROJECT :	LINE PROJECT	JOB NO. :	15005
2	CLIENT :	PT LOTTE CHEMICAL INDONESIA	DOCU. NO. :	LINE-900-BC-4-0001
3	LOCATION :	CILEGON, INDONESIA	ITEM NO. :	**90-P-301A/B/C**
4	UNIT :	WP5	NO. REQUIRED :	3 (THREE)
5	SERVICE :	**HP ETHYLENE FEED PUMPS**	SHEET :	3 OF 5

6	**FLUID**					**SKETCH**
7	LIQUID PUMPED			HP ETHYLENE		
8	OPERATING TEMPERATURE		(℃)	-30.3		
9	VISCOSITY @ OP. TEMP.		(cP)	0.063		
10	VAPOR PRESS. @ OP. TEMP.		(kg/cm2A)	19.6		
11	SP. GR. @ OP. TEMP.		(-)	0.435		
12						
13	NORMAL CAPACITY	(30 t/h)	(m3/hr)	69		
14	EXCESS RATIO		(%)	10		
15	RATED CAPACITY		(m3/hr)	76		
16	**SUCTION**					
17	PRESS. @ EQUIPMENT	(kg/cm2A)	(kg/cm2G)	19.63	18.6	
18	MIN. STATIC HEAD		(m)	3.5	(NOTE 2)	
19	PIPE FRICTION		(kg/cm2)	0.014		
20	STRAINER		(kg/cm2)	0.07		
21			(kg/cm2)			
22			(kg/cm2)			
23						
24	NET SUC. PRESS.	(kg/cm2A)	(kg/cm2G)	19.705	18.7	
25	NPSH a @ Suction Nozzle Center		(m)	1.66		
26	**DISCHARGE**					
27	PRESS. @ EQUIP. or BL	(kg/cm2A)	(kg/cm2G)	37.03	36.0	
28	STATIC HEAD		(m)	2.5		
29	PIPE FRICTION		(kg/cm2)	0.059		
30	FE-3002		(kg/cm2)	0.12		
31	FE-3003		(kg/cm2)	0.12		
32	E-301		(kg/cm2)	0.60		
33	E-341		(kg/cm2)	0.40		
34	PV-3006		(kg/cm2)	0.10		
35	VAPOR LINE LOSS (SECTION e,f,i)		(kg/cm2)	1.83		
36	VORTEX FE (SALES METER, FUTURE)		(kg/cm2)	0.10	(assumed)	
37	FV (FUTURE)		(kg/cm2)	0.15	(assumed)	
38	TOTAL DISCH. PRESS.	(kg/cm2A)	(kg/cm2G)	40.6	39.6	
39	SUC. PRESS.	(kg/cm2A)	(kg/cm2G)	19.7	18.7	
40	DIFF. PRESS. (ΔP)		(kg/cm2)	20.9		
41	TOTAL HEAD (NET)		(m)	481		
42	TOTAL HEAD (TAKE)		(m)	481		
43	DIFF. PRESS. (ΔP) (TAKE)		(kg/cm2)	20.9		
44	TOTAL DISCH. PRESS. (TAKE)		(kg/cm2G)	39.6		
45						
46						
47						
48	**MAX SHUT OFF PRESSURE (NOTE 1)**					
49	MAX. SUC. STATIC HEAD		(m)	18.4		
50	SUC. EQUIP. DESIGN PRESS.		(kg/cm2G)	19.9		
51	MAX. SUC. PRESS.		(kg/cm2G)	20.7		
52	DIFF. PRESS. (ΔP) (TAKE)		(kg/cm2)	25.9		
53	SHUTOFF COEFF.		(%)			
54	MAX. SHUTOFF PRESS.		(kg/cm2G)	46.6	(NOTE 3)	

CASE 3 : FEED TO FUTURE DESTINATION (GOVERNING)

2 OPERATION + 1 STANDBY, TYPE : VERTICAL CAN

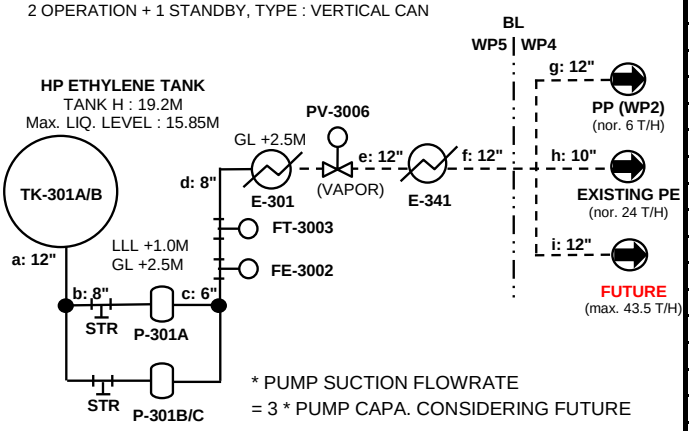

PIPE PRESSURE DROP

PIPING MATERIAL (C.S. or SUS.) : C.S. (3L1P)

		Suction		Discharge			
SECTION		**a**	**b**	**c**	**d**		
FLOW RATE	(m^3/h)	228	76	76	152		
PIPE ID	(in)	**12**	**8**	**6**	**8**		
PIPE SCH.	(in)	40	40	40	40		
PIPE ID	(mm)	303.22	202.72	154.05	202.72		
ROUGHNESS	(mm)	0.046	0.046	0.046	0.046		
VELOCITY	(m/s)	**0.875**	**0.653**	**1.131**	**1.306**		
REYNOLDS NO.	(-)	1832920	913868	1202592	1827736		
FRICTION FACTOR	(-)	0.003	0.004	0.004	0.004		
ΔP / 100m	(kg/cm^2)	**0.008**	**0.007**	**0.029**	**0.027**		
STRAIGHT LENGTH	(m)	156	19	19	185		
NO. OF PIPE ENTRANCE							
NO. OF PIPE EXIT							
NO. OF 90 ELBOW							
NO. OF TEE							
NO. OF GLOBE VALVE							
NO. OF GATE VALVE		3	1	2			
NO. OF CHECK VALVE				1			
NO. OF BUTTER VALVE							
NO. OF BALL VALVE							
NO. OF CONTRACT							
NO. OF ENLARGER							
OTHER Ks							
PIPE ΔP	(kg/cm^2)	0.0119	0.0013	0.0055	0.0503		
FITTING ΔP	(kg/cm^2)	0.0006	0.0001	0.0028	0.0000		
TOTAL ΔP	(kg/cm^2)	**0.0125**	**0.0015**	**0.0083**	**0.0503**		

NOTES

1. Differential shut off pressure at max impeller size shall be lower than pump differential pressure X 1.25.
   Max suction pressure = Max suction static head + Suction equipment design pressure
   For this pump, Max shut off pressure is calculated as below;
   Differential shut off pressure = vendor shut off head (596m)
   Max suction pressure = High High liquid level (15.85m) + Max operating pressure of suction equipment (19.9 kg/cm2g)
2. LLL is considered for NPSHa.
3. Downstream design pressure is applied as 47.0 kg/cm2g.

: SELECTED DATA FOR PUMP DATASHEET

PUMP HYDRAULIC CALCULATION SHEET

LOTTE E&C

REV	DATE	BY	CHK'D	APP'D
2	07-Mar-2024	J.H.JUNG	S.K.PARK	C.M.BAE
1	06-Feb-2023	J.H.JUNG	S.K.PARK	C.M.BAE
0	30-Jun-2022	J.H.JUNG	S.K.PARK	C.M.BAE
3	14-Jun-2024	J.H.JUNG	S.K.PARK	C.M.BAE

REVISION

1	PROJECT :	LINE PROJECT	JOB NO. :	15005
2	CLIENT :	PT LOTTE CHEMICAL INDONESIA	DOCU. NO. :	LINE-900-BC-4-0001
3	LOCATION :	CILEGON, INDONESIA	ITEM NO. :	**90-P-301A/B/C**
4	UNIT :	WP5	NO. REQUIRED :	3 (THREE)
5	SERVICE :	**HP ETHYLENE FEED PUMPS**	SHEET :	4 OF 5

FLUID

7	LIQUID PUMPED	HP ETHYLENE
8	OPERATING TEMPERATURE (℃)	-30.3
9	VISCOSITY @ OP. TEMP. (cP)	0.063
10	VAPOR PRESS. @ OP. TEMP. (kg/cm2A)	19.6
11	SP. GR. @ OP. TEMP. (-)	0.435
12		
13	NORMAL CAPACITY (30 t/h) (m3/hr)	69
14	EXCESS RATIO (%)	10
15	RATED CAPACITY (m3/hr)	76
16	**SUCTION**	
17	PRESS. @ EQUIPMENT (kg/cm2A) (kg/cm2G)	
18	MIN. STATIC HEAD (m)	
19	PIPE FRICTION (kg/cm2)	
20	(kg/cm2)	
21	(kg/cm2)	
22	(kg/cm2)	
23		
24	NET SUC. PRESS. (kg/cm2A) (kg/cm2G)	
25	NPSH a @ Suction Nozzle Center (m)	
26	**DISCHARGE**	
27	PRESS. @ EQUIP. or BL (kg/cm2A) (kg/cm2G)	
28	STATIC HEAD (m)	
29	PIPE FRICTION (kg/cm2)	
30	(kg/cm2)	
31	(kg/cm2)	
32	(kg/cm2)	
33	(kg/cm2)	
34	(kg/cm2)	
35	(kg/cm2)	
36	(kg/cm2)	
37		
38	TOTAL DISCH. PRESS. (kg/cm2A) (kg/cm2G)	
39	SUC. PRESS. (kg/cm2A) (kg/cm2G)	
40	DIFF. PRESS. (ΔP) (kg/cm2)	
41	TOTAL HEAD (NET) (m)	
42	TOTAL HEAD (TAKE) (m)	
43	DIFF. PRESS. (ΔP) (TAKE) (kg/cm2)	
44	TOTAL DISCH. PRESS. (TAKE) (kg/cm2G)	
45		
46		
47		
48	**MAX SHUT OFF PRESSURE (NOTE 1)**	
49	MAX. SUC. STATIC HEAD (m)	
50	SUC. EQUIP. DESIGN PRESS. (kg/cm2G)	
51	MAX. SUC. PRESS. (kg/cm2G)	
52	DIFF. PRESS. (ΔP) (TAKE) (kg/cm2)	
53	SHUTOFF COEFF. (%)	
54	MAX. SHUTOFF PRESS. (kg/cm2G)	

SKETCH

PUMP MINIMUM FLOW LINE

2 OPERATION + 1 STANDBY, TYPE : VERTICAL CAN

MINIMUM FLOWRATE IS VENDOR DATA.

PUMP MINIMUM FLOWRATE =	60	m3/hr	
PUMP DISCH. P. AS PER CURVE =	44.3	kg/cm2g	(1)
SUCTION EQUIPMENT PRESS. =	18.60	kg/cm2g	(2)
SUCTION EQUIPMENT HEAD =	18.4	m	
	0.80	kg/cm2	(3)
PIPE FRICTION =	0.30	kg/cm2	(4)
FE-3002 DEL P =	0.12	kg/cm2	(5)
OTHERS DEL P =		kg/cm2	(6)
OTHERS DEL P =		kg/cm2	(7)
FV-3002 DEL P =	**24.5**	**kg/cm2**	(8)

(8) = (1) - (2) - (3) - (4) - (5) - (6) - (7)

PIPE PRESSURE DROP

PIPING MATERIAL (C.S. or SUS.) : C.S. (3L1P)

		Suction		Discharge			
SECTION				**a**			
FLOW RATE	(m^3/h)			60			
PIPE ID	(in)			4			
PIPE SCH.	(in)			40			
PIPE ID	(mm)			102.26			
ROUGHNESS	(mm)			0.046			
VELOCITY	(m/s)			**2.029**			
REYNOLDS NO.	(-)			1432850			
FRICTION FACTOR	(-)			0.004			
ΔP / 100m	(kg/cm^2)			**0.149**			
STRAIGHT LENGTH	(m)			200			
NO. OF PIPE ENTRANCE							
NO. OF PIPE EXIT							
NO. OF 90 ELBOW							
NO. OF TEE							
NO. OF GLOBE VALVE							
NO. OF GATE VALVE							
NO. OF CHECK VALVE							
NO. OF BUTTER VALVE							
NO. OF BALL VALVE							
NO. OF CONTRACT							
NO. OF ENLARGER							
OTHER Ks							
PIPE ΔP	(kg/cm^2)			0.2982			
FITTING ΔP	(kg/cm^2)			0.0000			
TOTAL ΔP	(kg/cm^2)			**0.2982**			

NOTES

1. Differential shut off pressure at max impeller size shall be lower than pump differential pressure X 1.25.
   Max suction pressure = Max suction static head + Suction equipment design pressure

PT LOTTE CHEMICAL INDONESIA

LINE HYDRAULIC CALCULATION SHEET (LINE WP5)

LOTTE E&C

1	PROJECT :	LINE PROJECT	JOB NO. :	15005
2	CLIENT :	PT LOTTE CHEMICAL INDONESIA	DOCU. NO. :	LINE-900-BC-4-0001
3	LOCATION :	CILEGON, INDONESIA	P&ID NO. :	-
4	UNIT :	WP5	CASE :	DESIGN
5	SERVICE :	E-301 to PP Unit Vapor Line	SHEET :	5 OF 5

REVISION

6	Node No		CASE 1 - TO PP			CASE 2 - TO LCTN PE			CASE 3 - TO 인근사	
7	Section		e	f	g	e	f	h	e	f, i
8		From	E-301	E-341	BL	E-301	E-341	WP5 BL	E-301	E-341
9		To	E-341	BL	PP UNIT	E-341	WP5 BL	LCTN BL	E-341	FUTURE
10		P&ID No.	903-0002	903-0002	903-0002	903-0002	903-0002		903-0002	
11		Piping Material Class	3L1P	3L1P	3L1P	3L1P	3L1P	3L1P	3L1P	3L1P
12		Pipe Schedule	STD	STD	STD	STD	STD	STD	40	40
13		Pipe Roughness (mm)	0.046	0.046	0.046	0.046	0.046	0.046	0.046	0.046
14		Fluid	EL VAP.	EL VAP.	EL VAP.	EL VAP.	EL VAP.	EL VAP.	EL VAP.	EL VAP.
15	Calc Mode (L, Vu, Vd)		Vu	Vu	Vu	Vu	Vu	Vu	Vd	Vd
16	Temperature	: T (C)	0.0	40.0	40.0	0.0	40.0	40.0	0.0	40.0
17	Pressure	: P (kg/cm^2G)	38.10	38.08	38.03	38.10	38.08	38.03	37.82	36.00
18	Density	@ T,P (kg/m^3)								
19	Molecular	@ T,P (-)	28.05	28.05	28.05	28.05	28.05	28.05	28.05	28.05
20	Compress. Fact.	@ T,P (-)	1.00	1.00	1.00	1.00	1.00	1.00	1.00	1.00
21	Viscosity	@ T,P (cP)	0.01	0.01	0.01	0.01	0.01	0.01	0.01	0.01
22	C_P / C_V	@ T,P	1.14	1.14	1.14	1.14	1.14	1.14	1.14	1.14
23	M/B Flow Rate	(kg/h)	60,000	60,000	6,000	60,000	60,000	24,000	43,500	43,500
24	Excess Ratio	(-)	1.10	1.10	1.10	1.10	1.10	1.10	1.00	1.00
25	Flow Rate	(kg/h)	66,000	66,000	6,600	66,000	66,000	26,400	43,500	43,500
26	**Line Length**	(m)	**52.8**	**168**	**1200**	**52.8**	**168**	**1178.4**	**52.8**	**11700**
27	**Pipe Nominal Size**	(inch)	**12**	**12**	**12**	**12**	**12**	**10**	**12**	**12**
28		**Calculation Result**	**OK**	**OK**	**OK**	**OK**	**OK**	**OK**	**OK**	**OK**
29	Inlet Press.	(Input) (kg/cm^2G)	38.10	38.08	38.03	38.10	38.08	38.03		
30	Inlet Press.	(Calcul'd) (kg/cm^2G)		**38.08**	**38.03**	**38.10**	**38.08**	**38.03**	**37.83**	**37.82**
31	Velocity	@ Inlet (m/sec)	5.30	6.08	0.61	5.30	6.08	3.49	3.55	4.07
32	Reynolds No.	@ Inlet (-)	6962142.21	6381963.69	638196.37	6962142.21	6381963.69	3057204.09	5073854.58	5073854.58
33	d*V*V/2g	@ Inlet (kg/cm^2)		77.84	0.78	67.87	77.84	25.65	30.31	34.76
34	4*F*L/D	@ Inlet (-)	2.28	7.26	57.57	2.28	7.26	63.97	2.31	511.01
35	dP/100m	@ Inlet (kg/cm^2)	0.03	0.03	0.00	0.03	0.03	0.01	0.01	0.02
36	Outlet Press.	(Input) (kg/cm^2G)							37.82	36.00
37	Outlet Press.	(Calcul'd) (kg/cm^2G)	**38.08**	**38.03**	**38.02**	**38.08**	**38.03**	**37.86**	**37.82**	**36.00**
38	**Velocity**	**@ Outlet (m/sec)**	**5.30**	**6.08**	**0.61**	**5.30**	**6.08**	**3.51**	**3.55**	**4.27**
39		Limit	60.96	60.96	60.96	60.96	60.96	60.96	60.96	60.96
40	Sonic Velocity	@ Outlet (m/sec)	303.72	325.19	325.19	303.72	325.19	325.19	303.72	325.19
41	Mach No.	@ Outlet (-)	0.02	0.02	0.00	0.02	0.02	0.01	0.01	0.01
42	Reynolds No.	@ Outlet (-)	6962142.21	6381963.69	638196.37	6962142.21	6381963.69	3057204.09	5073854.58	5073854.58
43	d*V*V/2g	@ Outlet (kg/cm^2)		77.95	0.78	67.89	77.95	25.76	30.32	36.47
44	4*F*L/D	@ Outlet (-)	2.28	7.26	57.57	2.28	7.26	63.97	2.31	511.01
45	**dP/100m**	**@ Outlet (kg/cm^2)**	**0.029**	**0.034**	**0.000**	**0.029**	**0.034**	**0.014**	**0.013**	**0.016**
46		Limit	0.350	0.350	0.350	0.350	0.350	0.350	0.350	0.350
47	**Straight Pipe dP**	(kg/cm^2)	**0.015**	**0.057**	**0.004**	**0.015**	**0.057**	**0.164**	**0.007**	**1.819**
48	dP of Control Valve	(kg/cm^2)								
49	dP of Heat Exchanger	(kg/cm^2)								
50	dP of Column	(kg/cm^2)								
51	dP of Strainer	(kg/cm^2)								
52	dP of Orifice	(kg/cm^2)								
53	Other dP	(kg/cm^2)								
54	Static Head	(m)								
55		(kg/cm^2)								
56	**Equip dP**	(kg/cm^2)								
57	Pipe Entrance									
58	Pipe Exit									
59	90 Elbow									
60	Tee									
61	Globe Valve									
62	Gate Valve									
63	Check Valve									
64	Butterfly Valve									
65	Ball valve									
66	Contraction									
67	Enlargement									
68	Other's K									
69	**Sum (Ki)**									
70	**Fitting dP**	(kg/cm^2)								
71	**Total dP**	(kg/cm^2)	**0.015**	**0.057**	**0.004**	**0.015**	**0.057**	**0.164**	**0.007**	**1.819**
72	**Remarks**	TOTAL DP SUM			**0.077**			**0.237**		**1.826**
73										
74										

PUMP HYDRAULIC CALCULATION SHEET

LOTTE E&C

REV	DATE	BY	CHK'D	APP'D
2	07-Mar-2024	J.H.JUNG	S.K.PARK	C.M.BAE
1	06-Feb-2023	J.H.JUNG	S.K.PARK	C.M.BAE
0	30-Jun-2022	J.H.JUNG	S.K.PARK	C.M.BAE
3	14-Jun-2024	J.H.JUNG	S.K.PARK	C.M.BAE

REVISION

1	PROJECT :	LINE PROJECT	JOB NO. :	15005
2	CLIENT :	PT LOTTE CHEMICAL INDONESIA	DOCU. NO. :	LINE-900-BC-4-0001
3	LOCATION :	CILEGON, INDONESIA	ITEM NO. :	**90-P-302A/B**
4	UNIT :	WP5	NO. REQUIRED :	2 (TWO)
5	SERVICE :	**HP PROPYLENE FEED PUMPS**	SHEET :	1 OF 3

	FLUID			
7	LIQUID PUMPED		HP PROPYLENE	
8	OPERATING TEMPERATURE	(℃)	22.7	AMB
9	VISCOSITY @ OP. TEMP.	(cP)	0.095	
10	VAPOR PRESS. @ OP. TEMP.	(kg/cm2A)	11.23	
11	SP. GR. @ OP. TEMP.	(-)	0.510	
12				
13	NORMAL CAPACITY (51 t/h)	(m3/hr)	100	
14	EXCESS RATIO	(%)	10	
15	RATED CAPACITY	(m3/hr)	110	
16	**SUCTION**			
17	PRESS. @ EQUIPMENT	(kg/cm2A) (kg/cm2G)	11.23	10.2
18	MIN. STATIC HEAD	(m)	3.0	
19	PIPE FRICTION	(kg/cm2)	0.019	
20	STRAINER	(kg/cm2)	0.07	
21	MARGIN	(kg/cm2)	0.02	
22		(kg/cm2)		
23				
24	NET SUC. PRESS.	(kg/cm2A) (kg/cm2G)	11.274	10.2
25	NPSH a @ Suction Nozzle Center	(m)	0.9	
26	**DISCHARGE**			
27	PRESS. @ EQUIP. or BL	(kg/cm2A) (kg/cm2G)	24.03	23.0
28	STATIC HEAD	(m)	5.0	
29	PIPE FRICTION	(kg/cm2)	0.990	
30	FE-3011	(kg/cm2)	0.20	
31	FE-3012	(kg/cm2)	0.20	
32	MARGIN	(kg/cm2)	1.35	
33		(kg/cm2)		
34		(kg/cm2)		
35		(kg/cm2)		
36		(kg/cm2)		
37				
38	TOTAL DISCH. PRESS.	(kg/cm2A) (kg/cm2G)	27.03	26.0
39	SUC. PRESS.	(kg/cm2A) (kg/cm2G)	11.27	10.2
40	DIFF. PRESS. (ΔP)	(kg/cm2)	15.8	
41	TOTAL HEAD (NET)	(m)	309	
42	TOTAL HEAD (TAKE)	(m)	309	
43	DIFF. PRESS. (ΔP) (TAKE)	(kg/cm2)	15.8	
44	TOTAL DISCH. PRESS. (TAKE)	(kg/cm2G)	26.0	
45				
46				
47				
48	**MAX SHUT OFF PRESSURE (NOTE 1)**			
49	MAX. SUC. STATIC HEAD	(m)	22.2	
50	SUC. EQUIP. DESIGN PRESS.	(kg/cm2G)	20.3	
51	MAX. SUC. PRESS.	(kg/cm2G)	21.4	
52	DIFF. PRESS. (ΔP) (TAKE)	(kg/cm2)	15.8	
53	SHUTOFF COEFF.	(%)	125	
54	MAX. SHUTOFF PRESS.	(kg/cm2G)	41.1	

SKETCH

CASE 1 : FEED TO PP (GOVERNING)

1 OPERATION + 1 STANDBY, TYPE : VERTICAL CAN

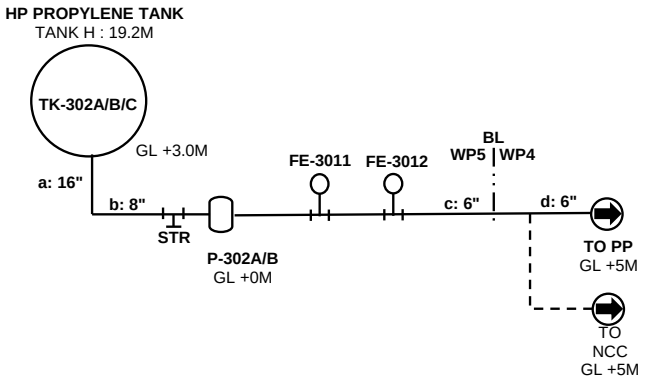

PIPE PRESSURE DROP

PIPING MATERIAL (C.S. or SUS.) : C.S. (3L1P)

		Suction		Discharge			
SECTION		**a**	**b**	**c**	**d**		
FLOW RATE	(m^3/h)	110	110	110	110		
PIPE ID	(in)	**16**	**8**	**6**	**6**		
PIPE SCH.	(in)	XS	40	40	40		
PIPE ID	(mm)	381.00	202.72	154.05	154.05		
ROUGHNESS	(mm)	0.046	0.046	0.046	0.046		
VELOCITY	(m/s)	**0.268**	**0.947**	**1.639**	**1.639**		
REYNOLDS NO.	(-)	548177	1030266	1355764	1355764		
FRICTION FACTOR	(-)	0.004	0.004	0.004	0.004		
ΔP / 100m	(kg/cm^2)	**0.001**	**0.017**	**0.070**	**0.070**		
STRAIGHT LENGTH	(m)	139	100	233	1167		
NO. OF PIPE ENTRANCE							
NO. OF PIPE EXIT							
NO. OF 90 ELBOW							
NO. OF TEE							
NO. OF GLOBE VALVE							
NO. OF GATE VALVE		3	1	3			
NO. OF CHECK VALVE				1			
NO. OF BUTTER VALVE							
NO. OF BALL VALVE							
NO. OF CONTRACT							
NO. OF ENLARGER							
OTHER Ks							
PIPE ΔP	(kg/cm^2)	0.0010	0.0172	0.1633	0.8190		
FITTING ΔP	(kg/cm^2)	0.0001	0.0003	0.0079	0.0000		
TOTAL ΔP	(kg/cm^2)	**0.0011**	**0.0175**	**0.1712**	**0.8190**		

NOTES

1. Differential shut off pressure at max impeller size shall be lower than pump differential pressure X 1.25.
   Max suction pressure = Max suction static head + Suction equipment design pressure

: SELECTED DATA FOR PUMP DATASHEET

PUMP HYDRAULIC CALCULATION SHEET

LOTTE E&C

REV	DATE	BY	CHK'D	APP'D
2	07-Mar-2024	J.H.JUNG	S.K.PARK	C.M.BAE
1	06-Feb-2023	J.H.JUNG	S.K.PARK	C.M.BAE
0	30-Jun-2022	J.H.JUNG	S.K.PARK	C.M.BAE
3	14-Jun-2024	J.H.JUNG	S.K.PARK	C.M.BAE

REVISION

1	PROJECT :	LINE PROJECT	JOB NO. :	15005
2	CLIENT :	PT LOTTE CHEMICAL INDONESIA	DOCU. NO. :	LINE-900-BC-4-0001
3	LOCATION :	CILEGON, INDONESIA	ITEM NO. :	**90-P-302A/B**
4	UNIT :	WP5	NO. REQUIRED :	2 (TWO)
5	SERVICE :	**HP PROPYLENE FEED PUMPS**	SHEET :	2 OF 3

	FLUID			
7	LIQUID PUMPED		HP PROPYLENE	
8	OPERATING TEMPERATURE	(℃)	22.7	AMB
9	VISCOSITY @ OP. TEMP.	(cP)	0.095	
10	VAPOR PRESS. @ OP. TEMP.	(kg/cm2A)	11.23	
11	SP. GR. @ OP. TEMP.	(-)	0.510	
12				
13	NORMAL CAPACITY (15 t/h)	(m3/hr)	29	
14	EXCESS RATIO	(%)	0	
15	RATED CAPACITY	(m3/hr)	29	
16	**SUCTION**			
17	PRESS. @ EQUIPMENT	(kg/cm2A) (kg/cm2G)	11.23	10.2
18	MIN. STATIC HEAD	(m)	3.0	
19	PIPE FRICTION	(kg/cm2)	0.001	
20	STRAINER	(kg/cm2)	0.07	
21		(kg/cm2)		
22		(kg/cm2)		
23				
24	NET SUC. PRESS.	(kg/cm2A) (kg/cm2G)	11.312	10.3
25	NPSH a @ Suction Nozzle Center	(m)	1.6	
26	**DISCHARGE**			
27	PRESS. @ EQUIP. or BL	(kg/cm2A) (kg/cm2G)	26.03	25.0
28	STATIC HEAD	(m)	5.0	
29	PIPE FRICTION	(kg/cm2)	0.020	
30	FE-3011	(kg/cm2)	0.20	
31	FE-3012	(kg/cm2)	0.20	
32		(kg/cm2)		
33		(kg/cm2)		
34		(kg/cm2)		
35		(kg/cm2)		
36		(kg/cm2)		
37				
38	TOTAL DISCH. PRESS.	(kg/cm2A) (kg/cm2G)	26.71	25.7
39	SUC. PRESS.	(kg/cm2A) (kg/cm2G)	11.31	10.3
40	DIFF. PRESS. (ΔP)	(kg/cm2)	15.4	
41	TOTAL HEAD (NET)	(m)	302	
42	TOTAL HEAD (TAKE)	(m)		
43	DIFF. PRESS. (ΔP) (TAKE)	(kg/cm2)		
44	TOTAL DISCH. PRESS. (TAKE)	(kg/cm2G)		
45				
46				
47				
48	**MAX SHUT OFF PRESSURE (NOTE 1)**			
49	MAX. SUC. STATIC HEAD	(m)		
50	SUC. EQUIP. DESIGN PRESS.	(kg/cm2G)		
51	MAX. SUC. PRESS.	(kg/cm2G)		
52	DIFF. PRESS. (ΔP) (TAKE)	(kg/cm2)		
53	SHUTOFF COEFF.	(%)		
54	MAX. SHUTOFF PRESS.	(kg/cm2G)		

SKETCH

CASE 2 : PROPYLENE MAKE UP TO NCC DURING START UP

1 OPERATION + 1 STANDBY, TYPE : VERTICAL CAN

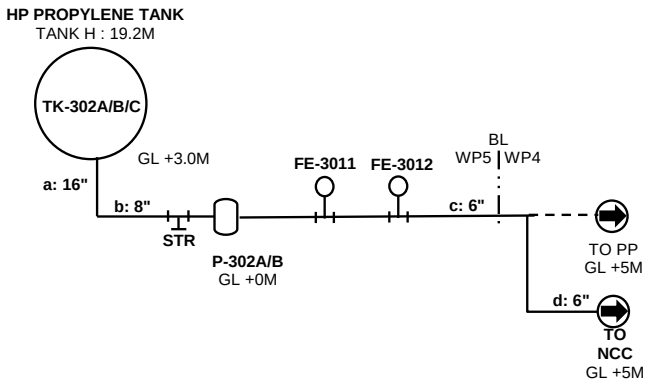

PIPE PRESSURE DROP

PIPING MATERIAL (C.S. or SUS.) : C.S. (3L1P)

		Suction		Discharge			
SECTION		**a**	**b**	**c**	**d**		
FLOW RATE	(m^3/h)	29	29	29	29		
PIPE ID	(in)	**16**	**8**	**6**	**6**		
PIPE SCH.	(in)	XS	40	40	40		
PIPE ID	(mm)	381.00	202.72	154.05	154.05		
ROUGHNESS	(mm)	0.046	0.046	0.046	0.046		
VELOCITY	(m/s)	**0.072**	**0.253**	**0.438**	**0.438**		
REYNOLDS NO.	(-)	146571	275472	362504	362504		
FRICTION FACTOR	(-)	0.004	0.004	0.004	0.004		
ΔP / 100m	(kg/cm^2)	**0.000**	**0.001**	**0.005**	**0.005**		
STRAIGHT LENGTH	(m)	139	100	233	120		
NO. OF PIPE ENTRANCE							
NO. OF PIPE EXIT							
NO. OF 90 ELBOW							
NO. OF TEE							
NO. OF GLOBE VALVE							
NO. OF GATE VALVE		3	1	3			
NO. OF CHECK VALVE				1			
NO. OF BUTTER VALVE							
NO. OF BALL VALVE							
NO. OF CONTRACT							
NO. OF ENLARGER							
OTHER Ks							
PIPE ΔP	(kg/cm^2)	0.0001	0.0014	0.0126	0.0065		
FITTING ΔP	(kg/cm^2)	0.0000	0.0000	0.0006	0.0000		
TOTAL ΔP	(kg/cm^2)	**0.0001**	**0.0014**	**0.0132**	**0.0065**		

NOTES

1. Differential shut off pressure at max impeller size shall be lower than pump differential pressure X 1.25.
   Max suction pressure = Max suction static head + Suction equipment design pressure

: SELECTED DATA FOR PUMP DATASHEET

PUMP HYDRAULIC CALCULATION SHEET

LOTTE E&C

REV	DATE	BY	CHK'D	APP'D
2	07-Mar-2024	J.H.JUNG	S.K.PARK	C.M.BAE
1	06-Feb-2023	J.H.JUNG	S.K.PARK	C.M.BAE
0	30-Jun-2022	J.H.JUNG	S.K.PARK	C.M.BAE
3	14-Jun-2024	J.H.JUNG	S.K.PARK	C.M.BAE

REVISION

1	PROJECT :	LINE PROJECT	JOB NO. :	15005
2	CLIENT :	PT LOTTE CHEMICAL INDONESIA	DOCU. NO. :	LINE-900-BC-4-0001
3	LOCATION :	CILEGON, INDONESIA	ITEM NO. :	**90-P-302A/B**
4	UNIT :	WP5	NO. REQUIRED :	2 (TWO)
5	SERVICE :	**HP PROPYLENE FEED PUMPS**	SHEET :	3 OF 3

	FLUID		
7	LIQUID PUMPED		HP PROPYLENE
8	OPERATING TEMPERATURE	(℃)	22.7 AMB
9	VISCOSITY @ OP. TEMP.	(cP)	0.095
10	VAPOR PRESS. @ OP. TEMP.	(kg/cm2A)	11.23
11	SP. GR. @ OP. TEMP.	(-)	0.510
12			
13	NORMAL CAPACITY (51 t/h)	(m3/hr)	100
14	EXCESS RATIO	(%)	10
15	RATED CAPACITY	(m3/hr)	110
16	**SUCTION**		
17	PRESS. @ EQUIPMENT	(kg/cm2A) (kg/cm2G)	
18	MIN. STATIC HEAD	(m)	
19	PIPE FRICTION	(kg/cm2)	
20		(kg/cm2)	
21		(kg/cm2)	
22		(kg/cm2)	
23			
24	NET SUC. PRESS.	(kg/cm2A) (kg/cm2G)	
25	NPSH a @ Suction Nozzle Center	(m)	
26	**DISCHARGE**		
27	PRESS. @ EQUIP. or BL	(kg/cm2A) (kg/cm2G)	
28	STATIC HEAD	(m)	
29	PIPE FRICTION	(kg/cm2)	
30		(kg/cm2)	
31		(kg/cm2)	
32		(kg/cm2)	
33		(kg/cm2)	
34		(kg/cm2)	
35		(kg/cm2)	
36		(kg/cm2)	
37			
38	TOTAL DISCH. PRESS.	(kg/cm2A) (kg/cm2G)	
39	SUC. PRESS.	(kg/cm2A) (kg/cm2G)	
40	DIFF. PRESS. (ΔP)	(kg/cm2)	
41	TOTAL HEAD (NET)	(m)	
42	TOTAL HEAD (TAKE)	(m)	
43	DIFF. PRESS. (ΔP) (TAKE)	(kg/cm2)	
44	TOTAL DISCH. PRESS. (TAKE)	(kg/cm2G)	
45			
46			
47			
48	**MAX SHUT OFF PRESSURE (NOTE 1)**		
49	MAX. SUC. STATIC HEAD	(m)	
50	SUC. EQUIP. DESIGN PRESS.	(kg/cm2G)	
51	MAX. SUC. PRESS.	(kg/cm2G)	
52	DIFF. PRESS. (ΔP) (TAKE)	(kg/cm2)	
53	SHUTOFF COEFF.	(%)	
54	MAX. SHUTOFF PRESS.	(kg/cm2G)	

SKETCH

PUMP MINIMUM FLOW LINE

1 OPERATION + 1 STANDBY, TYPE : VERTICAL SUBMERGED

MINIMUM FLOWRATE IS VENDOR DATA.

PUMP MINIMUM FLOWRATE =	50	m3/hr	
PUMP DISCH. P. AS PER CURVE =	29.1	kg/cm2g	(1)
SUCTION EQUIPMENT PRESS. =	10.20	kg/cm2g	(2)
SUCTION EQUIPMENT HEAD =	22.2	m	
	1.13	kg/cm2	(3)
PIPE FRICTION =	0.25	kg/cm2	(4)
FE-3011 DEL P =	0.20	kg/cm2	(5)
OTHERS DEL P =		kg/cm2	(6)
OTHERS DEL P =		kg/cm2	(7)
FV-3011 DEL P =	**17.3**	**kg/cm2**	(8)

(8) = (1) - (2) - (3) - (4) - (5) - (6) - (7)

PIPE PRESSURE DROP

PIPING MATERIAL (C.S. or SUS.) : C.S. (3L1P)

		Suction		Discharge			
SECTION				**a**			
FLOW RATE	(m^3/h)			50			
PIPE ID	(in)			4			
PIPE SCH.	(in)			40			
PIPE ID	(mm)			102.26			
ROUGHNESS	(mm)			0.046			
VELOCITY	(m/s)			**1.691**			
REYNOLDS NO.	(-)			928362			
FRICTION FACTOR	(-)			0.004			
ΔP / 100m	(kg/cm^2)			**0.123**			
STRAIGHT LENGTH	(m)			200			
NO. OF PIPE ENTRANCE							
NO. OF PIPE EXIT							
NO. OF 90 ELBOW							
NO. OF TEE							
NO. OF GLOBE VALVE							
NO. OF GATE VALVE							
NO. OF CHECK VALVE							
NO. OF BUTTER VALVE							
NO. OF BALL VALVE							
NO. OF CONTRACT							
NO. OF ENLARGER							
OTHER Ks							
PIPE ΔP	(kg/cm^2)			0.2456			
FITTING ΔP	(kg/cm^2)			0.0000			
TOTAL ΔP	(kg/cm^2)			**0.2456**			

NOTES

1. Differential shut off pressure at max impeller size shall be lower than pump differential pressure X 1.25.
   Max suction pressure = Max suction static head + Suction equipment design pressure

PUMP HYDRAULIC CALCULATION SHEET

LOTTE E&C

REV	DATE	BY	CHK'D	APP'D
2	07-Mar-2024	J.H.JUNG	S.K.PARK	C.M.BAE
1	06-Feb-2023	J.H.JUNG	S.K.PARK	C.M.BAE
0	30-Jun-2022	J.H.JUNG	S.K.PARK	C.M.BAE
3	14-Jun-2024	J.H.JUNG	S.K.PARK	C.M.BAE

REVISION

1	PROJECT :	LINE PROJECT	JOB NO. :	15005
2	CLIENT :	PT LOTTE CHEMICAL INDONESIA	DOCU. NO. :	LINE-900-BC-4-0001
3	LOCATION :	CILEGON, INDONESIA	ITEM NO. :	**90-P-303A/B**
4	UNIT :	WP5	NO. REQUIRED :	2 (TWO)
5	SERVICE :	**MIXED C4 FEED PUMPS**	SHEET :	1 OF 3

	FLUID			
7	LIQUID PUMPED		Mixed C4	
8	OPERATING TEMPERATURE	(℃)	22.7	AMB
9	VISCOSITY @ OP. TEMP.	(cP)	0.156	
10	VAPOR PRESS. @ OP. TEMP.	(kg/cm2A)	2.63	
11	SP. GR. @ OP. TEMP.	(-)	0.604	
12				
13	NORMAL CAPACITY (50 t/h)	(m3/hr)	83	
14	EXCESS RATIO	(%)	10	
15	RATED CAPACITY	(m3/hr)	91	
16	**SUCTION**			
17	PRESS. @ EQUIPMENT	(kg/cm2A) (kg/cm2G)	2.63	1.60
18	MIN. STATIC HEAD	(m)	2.5	
19	PIPE FRICTION	(kg/cm2)	0.053	
20	STRAINER	(kg/cm2)	0.07	
21		(kg/cm2)		
22		(kg/cm2)		
23				
24	NET SUC. PRESS.	(kg/cm2A) (kg/cm2G)	2.658	1.6
25	NPSH a @ Suction Nozzle Center	(m)	0.5	
26	**DISCHARGE**			
27	PRESS. @ EQUIP. or BL	(kg/cm2A) (kg/cm2G)	3.13	2.1
28	STATIC HEAD	(m)	10.0	
29	PIPE FRICTION	(kg/cm2)	6.046	
30	FE-3019	(kg/cm2)	0.20	
31	FE-3022	(kg/cm2)	0.25	
32	FE-6009	(kg/cm2)	0.28	
33	LOADING ARM DEL P	(kg/cm2)	1.00	
34	MARGIN	(kg/cm2)	0.20	
35		(kg/cm2)		
36		(kg/cm2)		
37		s		
38	TOTAL DISCH. PRESS.	(kg/cm2A) (kg/cm2G)	11.7	10.7
39	SUC. PRESS.	(kg/cm2A) (kg/cm2G)	2.7	1.6
40	DIFF. PRESS. (ΔP)	(kg/cm2)	9.1	
41	TOTAL HEAD (NET)	(m)	150	
42	TOTAL HEAD (TAKE)	(m)	150	
43	DIFF. PRESS. (ΔP) (TAKE)	(kg/cm2)	9.1	
44	TOTAL DISCH. PRESS. (TAKE)	(kg/cm2G)	10.7	
45				
46				
47				
48	**MAX SHUT OFF PRESSURE (NOTE 1)**			
49	MAX. SUC. STATIC HEAD	(m)	21.7	
50	SUC. EQUIP. DESIGN PRESS.	(kg/cm2G)	6.00	
51	MAX. SUC. PRESS.	(kg/cm2G)	7.3	
52	DIFF. PRESS. (ΔP) (TAKE)	(kg/cm2)	9.1	
53	SHUTOFF COEFF.	(%)	125	
54	MAX. SHUTOFF PRESS.	(kg/cm2G)	18.6	

SKETCH

CASE 1 : EXPORT TO NEW JETTY (GOVERNING)

2 OPERATION + 0 STANDBY, TYPE : VERTICAL CAN

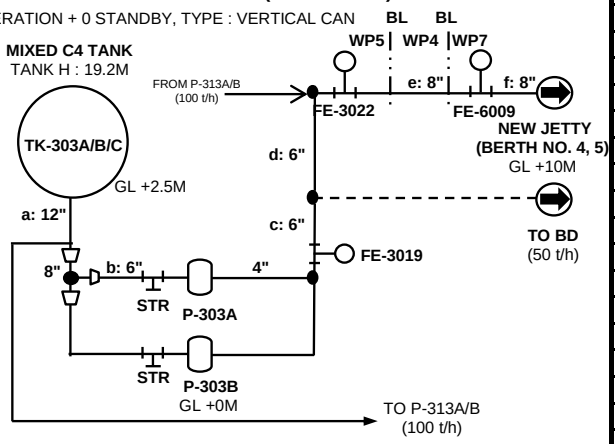

PIPE PRESSURE DROP

PIPING MATERIAL (C.S. or SUS.) : C.S. (1C1P)

		Suction		Discharge			
SECTION		**a**	**b**	**c**	**d**	**e**	**f**
FLOW RATE	(m^3/h)	364	91	182	182	364	364
PIPE ID	(in)	**12**	**6**	**6**	**6**	**8**	**8**
PIPE SCH.	(in)	STD	40	40	40	40	40
PIPE ID	(mm)	304.80	154.05	154.05	154.05	202.72	202.72
ROUGHNESS	(mm)	0.046	0.046	0.046	0.046	0.046	0.046
VELOCITY	(m/s)	**1.387**	**1.357**	**2.715**	**2.715**	**3.135**	**3.135**
REYNOLDS NO.	(-)	1636768	809618	1619236	1619236	2460965	2460965
FRICTION FACTOR	(-)	0.003	0.004	0.004	0.004	0.004	0.004
ΔP / 100m	(kg/cm^2)	**0.027**	**0.058**	**0.227**	**0.227**	**0.216**	**0.216**
STRAIGHT LENGTH	(m)	144	20	66	132	876	1686
NO. OF PIPE ENTRANCE							
NO. OF PIPE EXIT							
NO. OF 90 ELBOW							
NO. OF TEE							
NO. OF GLOBE VALVE							
NO. OF GATE VALVE		3	1	2	1		4
NO. OF CHECK VALVE				1			1
NO. OF BUTTER VALVE							
NO. OF BALL VALVE							
NO. OF CONTRACT							
NO. OF ENLARGER							
OTHER Ks							
PIPE ΔP	(kg/cm^2)	0.0384	0.0116	0.1496	0.2992	1.8927	3.643
FITTING ΔP	(kg/cm^2)	0.0020	0.0007	0.0228	0.0029	0.0000	0.036
TOTAL ΔP	(kg/cm^2)	**0.0404**	**0.0124**	**0.1723**	**0.3020**	**1.8927**	**3.679**

NOTES

1. Differential shut off pressure at max impeller size shall be lower than pump differential pressure X 1.25.
   Max suction pressure = Max suction static head + Suction equipment design pressure

2. Four(4) pumps(P-303A/B, P-313A/B) are running during export to jetty.

: SELECTED DATA FOR PUMP DATASHEET

PUMP HYDRAULIC CALCULATION SHEET

LOTTE E&C

REV	DATE	BY	CHK'D	APP'D
2	07-Mar-2024	J.H.JUNG	S.K.PARK	C.M.BAE
1	06-Feb-2023	J.H.JUNG	S.K.PARK	C.M.BAE
0	30-Jun-2022	J.H.JUNG	S.K.PARK	C.M.BAE
3	14-Jun-2024	J.H.JUNG	S.K.PARK	C.M.BAE

REVISION

1	PROJECT :	LINE PROJECT	JOB NO. :	15005
2	CLIENT :	PT LOTTE CHEMICAL INDONESIA	DOCU. NO. :	LINE-900-BC-4-0001
3	LOCATION :	CILEGON, INDONESIA	ITEM NO. :	**90-P-303A/B**
4	UNIT :	WP5	NO. REQUIRED :	2 (TWO)
5	SERVICE :	**MIXED C4 FEED PUMPS**	SHEET :	2 OF 3

	FLUID			
7	LIQUID PUMPED		Mixed C4	
8	OPERATING TEMPERATURE	(℃)	22.7	AMB
9	VISCOSITY @ OP. TEMP.	(cP)	0.156	
10	VAPOR PRESS. @ OP. TEMP.	(kg/cm2A)	2.63	
11	SP. GR. @ OP. TEMP.	(-)	0.604	
12				
13	NORMAL CAPACITY (50 t/h)	(m3/hr)	83	
14	EXCESS RATIO	(%)	10	
15	RATED CAPACITY	(m3/hr)	91	
16	**SUCTION**			
17	PRESS. @ EQUIPMENT	(kg/cm2A) (kg/cm2G)	2.63	1.60
18	MIN. STATIC HEAD	(m)	2.5	
19	PIPE FRICTION	(kg/cm2)	0.015	
20	STRAINER	(kg/cm2)	0.07	
21		(kg/cm2)		
22		(kg/cm2)		
23				
24	NET SUC. PRESS.	(kg/cm2A) (kg/cm2G)	2.696	1.7
25	NPSH a @ Suction Nozzle Center	(m)	1.1	
26	**DISCHARGE**			
27	PRESS. @ EQUIP. or BL	(kg/cm2A) (kg/cm2G)	9.23	8.2
28	STATIC HEAD	(m)	5.0	
29	PIPE FRICTION	(kg/cm2)	0.552	
30	FE-3019	(kg/cm2)	0.20	
31	FE-3020	(kg/cm2)	0.20	
32		(kg/cm2)		
33		(kg/cm2)		
34		(kg/cm2)		
35		(kg/cm2)		
36		(kg/cm2)		
37				
38	TOTAL DISCH. PRESS.	(kg/cm2A) (kg/cm2G)	10.5	9.5
39	SUC. PRESS.	(kg/cm2A) (kg/cm2G)	2.7	1.7
40	DIFF. PRESS. (ΔP)	(kg/cm2)	7.8	
41	TOTAL HEAD (NET)	(m)	129	
42	TOTAL HEAD (TAKE)	(m)		
43	DIFF. PRESS. (ΔP) (TAKE)	(kg/cm2)		
44	TOTAL DISCH. PRESS. (TAKE)	(kg/cm2G)		
45				
46				
47				
48	**MAX SHUT OFF PRESSURE (NOTE 1)**			
49	MAX. SUC. STATIC HEAD	(m)		
50	SUC. EQUIP. DESIGN PRESS.	(kg/cm2G)		
51	MAX. SUC. PRESS.	(kg/cm2G)		
52	DIFF. PRESS. (ΔP) (TAKE)	(kg/cm2)		
53	SHUTOFF COEFF.	(%)		
54	MAX. SHUTOFF PRESS.	(kg/cm2G)		

SKETCH

CASE 2 : FEED TO BD

1 OPERATION + 1 STANDBY, TYPE : VERTICAL CAN

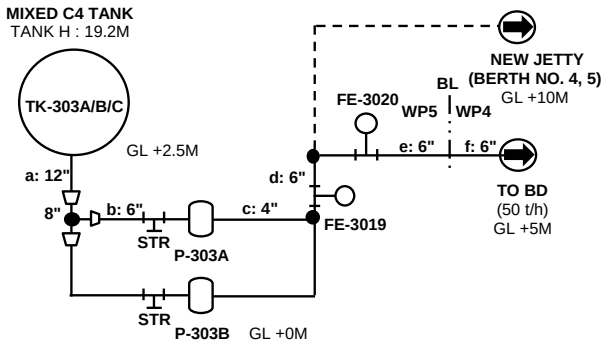

* MIXED C4 IS NOT EXPORTED DURING FEED TO BD

PIPE PRESSURE DROP

PIPING MATERIAL (C.S. or SUS.) : C.S. (1C1P)

		Suction		Discharge			
SECTION		**a**	**b**	**c**	**d**	**e**	**f**
FLOW RATE	(m^3/h)	91	91	91	91	91	91
PIPE ID	(in)	**12**	**6**	**4**	**6**	**6**	**6**
PIPE SCH.	(in)	STD	40	40	40	40	40
PIPE ID	(mm)	304.80	154.05	102.26	154.05	154.05	154.05
ROUGHNESS	(mm)	0.046	0.046	0.046	0.046	0.046	0.046
VELOCITY	(m/s)	**0.346**	**1.357**	**3.080**	**1.357**	**1.357**	**1.357**
REYNOLDS NO.	(-)	408832	809618	1219653	809618	809618	809618
FRICTION FACTOR	(-)	0.004	0.004	0.004	0.004	0.004	0.004
ΔP / 100m	(kg/cm^2)	**0.002**	**0.058**	**0.479**	**0.058**	**0.058**	**0.058**
STRAIGHT LENGTH	(m)	144	20	8	30	162	636
NO. OF PIPE ENTRANCE							
NO. OF PIPE EXIT							
NO. OF 90 ELBOW							
NO. OF TEE							
NO. OF GLOBE VALVE							
NO. OF GATE VALVE		3	1	1	3		
NO. OF CHECK VALVE				1			
NO. OF BUTTER VALVE							
NO. OF BALL VALVE							
NO. OF CONTRACT							
NO. OF ENLARGER							
OTHER Ks							
PIPE ΔP	(kg/cm^2)	0.0027	0.0116	0.0402	0.0175	0.0943	0.3701
FITTING ΔP	(kg/cm^2)	0.0001	0.0007	0.0276	0.0022	0.0000	0.0000
TOTAL ΔP	(kg/cm^2)	**0.0028**	**0.0124**	**0.0679**	**0.0196**	**0.0943**	**0.3701**

NOTES

1. Differential shut off pressure at max impeller size shall be lower than pump differential pressure X 1.25.
   Max suction pressure = Max suction static head + Suction equipment design pressure

PUMP HYDRAULIC CALCULATION SHEET

LOTTE E&C

REV	DATE	BY	CHK'D	APP'D
2	07-Mar-2024	J.H.JUNG	S.K.PARK	C.M.BAE
1	06-Feb-2023	J.H.JUNG	S.K.PARK	C.M.BAE
0	30-Jun-2022	J.H.JUNG	S.K.PARK	C.M.BAE
3	14-Jun-2024	J.H.JUNG	S.K.PARK	C.M.BAE

REVISION

1	PROJECT :	LINE PROJECT	JOB NO. :	15005
2	CLIENT :	PT LOTTE CHEMICAL INDONESIA	DOCU. NO. :	LINE-900-BC-4-0001
3	LOCATION :	CILEGON, INDONESIA	ITEM NO. :	**90-P-303A/B**
4	UNIT :	WP5	NO. REQUIRED :	2 (TWO)
5	SERVICE :	**MIXED C4 FEED PUMPS**	SHEET :	3 OF 3

	FLUID		
7	LIQUID PUMPED		Mixed C4
8	OPERATING TEMPERATURE	(℃)	22.7 AMB
9	VISCOSITY @ OP. TEMP.	(cP)	0.156
10	VAPOR PRESS. @ OP. TEMP.	(kg/cm2A)	2.63
11	SP. GR. @ OP. TEMP.	(-)	0.604
12			
13	NORMAL CAPACITY (50 t/h)	(m3/hr)	83
14	EXCESS RATIO	(%)	10
15	RATED CAPACITY	(m3/hr)	91
16	**SUCTION**		
17	PRESS. @ EQUIPMENT	(kg/cm2A) (kg/cm2G)	
18	MIN. STATIC HEAD	(m)	
19	PIPE FRICTION	(kg/cm2)	
20		(kg/cm2)	
21		(kg/cm2)	
22		(kg/cm2)	
23			
24	NET SUC. PRESS.	(kg/cm2A) (kg/cm2G)	
25	NPSH a @ Suction Nozzle Center	(m)	
26	**DISCHARGE**		
27	PRESS. @ EQUIP. or BL	(kg/cm2A) (kg/cm2G)	
28	STATIC HEAD	(m)	
29	PIPE FRICTION	(kg/cm2)	
30		(kg/cm2)	
31		(kg/cm2)	
32		(kg/cm2)	
33		(kg/cm2)	
34		(kg/cm2)	
35		(kg/cm2)	
36		(kg/cm2)	
37			
38	TOTAL DISCH. PRESS.	(kg/cm2A) (kg/cm2G)	
39	SUC. PRESS.	(kg/cm2A) (kg/cm2G)	
40	DIFF. PRESS. (ΔP)	(kg/cm2)	
41	TOTAL HEAD (NET)	(m)	
42	TOTAL HEAD (TAKE)	(m)	
43	DIFF. PRESS. (ΔP) (TAKE)	(kg/cm2)	
44	TOTAL DISCH. PRESS. (TAKE)	(kg/cm2G)	
45			
46			
47			
48	**MAX SHUT OFF PRESSURE (NOTE 1)**		
49	MAX. SUC. STATIC HEAD	(m)	
50	SUC. EQUIP. DESIGN PRESS.	(kg/cm2G)	
51	MAX. SUC. PRESS.	(kg/cm2G)	
52	DIFF. PRESS. (ΔP) (TAKE)	(kg/cm2)	
53	SHUTOFF COEFF.	(%)	
54	MAX. SHUTOFF PRESS.	(kg/cm2G)	

SKETCH

PUMP MINIMUM FLOW LINE

2 OPERATION + 0 STANDBY, TYPE : VERTICAL CAN

MINIMUM FLOWRATE IS VENDOR DATA.

PUMP MINIMUM FLOWRATE =	76	m3/hr	
PUMP DISCH. P. AS PER CURVE =	11.8	kg/cm2g	(1)
SUCTION EQUIPMENT PRESS. =	1.60	kg/cm2g	(2)
SUCTION EQUIPMENT HEAD =	21.7	m	
	1.31	kg/cm2	(3)
PIPE FRICTION =	0.75	kg/cm2	(4)
FE-3019 DEL P =	0.20	kg/cm2	(5)
OTHERS DEL P =		kg/cm2	(6)
OTHERS DEL P =		kg/cm2	(7)
FV-3019 DEL P =	**8.0**	**kg/cm2**	(8)

(8) = (1) - (2) - (3) - (4) - (5) - (6) - (7)

PIPE PRESSURE DROP

PIPING MATERIAL (C.S. or SUS.) : C.S. (1C1P)

		Suction		Discharge			
SECTION				**a**	**b**		
FLOW RATE	(m^3/h)			76	152		
PIPE ID	(in)			4	8		
PIPE SCH.	(in)			40	40		
PIPE ID	(mm)			102.26	202.72		
ROUGHNESS	(mm)			0.046	0.046		
VELOCITY	(m/s)			**2.570**	**1.308**		
REYNOLDS NO.	(-)			1017716	1026753		
FRICTION FACTOR	(-)			0.004	0.004		
ΔP / 100m	(kg/cm^2)			**0.335**	**0.039**		
STRAIGHT LENGTH	(m)			200	200		
NO. OF PIPE ENTRANCE							
NO. OF PIPE EXIT							
NO. OF 90 ELBOW							
NO. OF TEE							
NO. OF GLOBE VALVE							
NO. OF GATE VALVE							
NO. OF CHECK VALVE							
NO. OF BUTTER VALVE							
NO. OF BALL VALVE							
NO. OF CONTRACT							
NO. OF ENLARGER							
OTHER Ks							
PIPE ΔP	(kg/cm^2)			0.6702	0.0777		
FITTING ΔP	(kg/cm^2)			0.0000	0.0000		
TOTAL ΔP	(kg/cm^2)			**0.6702**	**0.0777**		

NOTES

1. Differential shut off pressure at max impeller size shall be lower than pump differential pressure X 1.25.
   Max suction pressure = Max suction static head + Suction equipment design pressure

2. Four(4) pumps(P-303A/B, P-313A/B) are running during export to jetty.

PUMP HYDRAULIC CALCULATION SHEET

LOTTE E&C

REV	DATE	BY	CHK'D	APP'D
2	07-Mar-2024	J.H.JUNG	S.K.PARK	C.M.BAE
1	06-Feb-2023	J.H.JUNG	S.K.PARK	C.M.BAE
0	30-Jun-2022	J.H.JUNG	S.K.PARK	C.M.BAE
3	14-Jun-2024	J.H.JUNG	S.K.PARK	C.M.BAE

REVISION

1	PROJECT :	LINE PROJECT	JOB NO. :	15005
2	CLIENT :	PT LOTTE CHEMICAL INDONESIA	DOCU. NO. :	LINE-900-BC-4-0001
3	LOCATION :	CILEGON, INDONESIA	ITEM NO. :	**90-P-312A/B**
4	UNIT :	WP5	NO. REQUIRED :	2 (TWO)
5	SERVICE :	**HP PROPYLENE EXPORT PUMPS**	SHEET :	1 OF 2

6	**FLUID**			
7	LIQUID PUMPED		HP Propylene	
8	OPERATING TEMPERATURE	(℃)	22.7	AMB
9	VISCOSITY @ OP. TEMP.	(cP)	0.095	
10	VAPOR PRESS. @ OP. TEMP.	(kg/cm2A)	11.23	
11	SP. GR. @ OP. TEMP.	(-)	0.510	
12				
13	NORMAL CAPACITY (150 t/h)	(m3/hr)	294	
14	EXCESS RATIO	(%)	10	
15	RATED CAPACITY	(m3/hr)	324	
16	**SUCTION**			
17	PRESS. @ EQUIPMENT	(kg/cm2A) (kg/cm2G)	11.23	10.2
18	MIN. STATIC HEAD	(m)	3.0	
19	PIPE FRICTION	(kg/cm2)	0.062	
20	STRAINER	(kg/cm2)	0.07	
21		(kg/cm2)		
22		(kg/cm2)		
23				
24	NET SUC. PRESS.	(kg/cm2A) (kg/cm2G)	11.251	10.2
25	NPSH a @ Suction Nozzle Center	(m)	0.4	
26	**DISCHARGE**			
27	PRESS. @ EQUIP. or BL	(kg/cm2A) (kg/cm2G)	11.73	10.7
28	STATIC HEAD	(m)	10.0	
29	PIPE FRICTION	(kg/cm2)	3.792	
30	FE-3013	(kg/cm2)	0.11	
31	FE-3014	(kg/cm2)	0.11	
32	FE-6005	(kg/cm2)	0.30	
33	LOADING ARM DEL P	(kg/cm2)	1.00	
34		(kg/cm2)		
35		(kg/cm2)		
36		(kg/cm2)		
37				
38	TOTAL DISCH. PRESS.	(kg/cm2A) (kg/cm2G)	17.6	16.5
39	SUC. PRESS.	(kg/cm2A) (kg/cm2G)	11.3	10.2
40	DIFF. PRESS. (ΔP)	(kg/cm2)	6.3	
41	TOTAL HEAD (NET)	(m)	124	
42	TOTAL HEAD (TAKE)	(m)	124	
43	DIFF. PRESS. (ΔP) (TAKE)	(kg/cm2)	6.3	
44	TOTAL DISCH. PRESS. (TAKE)	(kg/cm2G)	16.5	
45				
46				
47				
48	**MAX SHUT OFF PRESSURE (NOTE 1)**			
49	MAX. SUC. STATIC HEAD	(m)	22.2	
50	SUC. EQUIP. DESIGN PRESS.	(kg/cm2G)	20.3	
51	MAX. SUC. PRESS.	(kg/cm2G)	21.4	
52	DIFF. PRESS. (ΔP) (TAKE)	(kg/cm2)	6.7	
53	SHUTOFF COEFF.	(%)		
54	MAX. SHUTOFF PRESS.	(kg/cm2G)	28.1	(NOTE 2)

SKETCH

CASE : EXPORT TO NEW JETTY

2 OPERATION + 0 STANDBY, TYPE : VERTICAL CAN

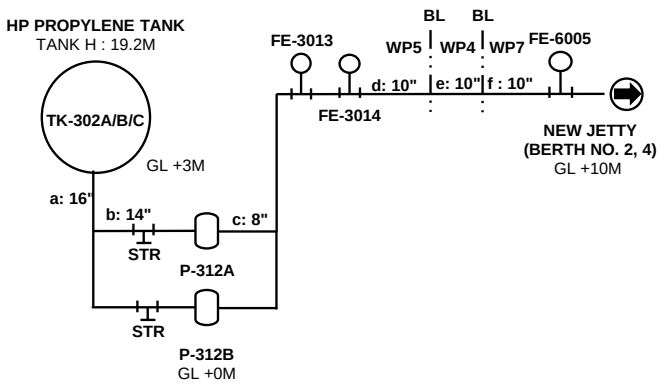

PIPE PRESSURE DROP

PIPING MATERIAL (C.S. or SUS.) : C.S. (3L1P)

		Suction		Discharge			
SECTION		**a**	**b**	**c**	**d**	**e**	**f**
FLOW RATE	(m^3/h)	647	324	324	647	647	647
PIPE ID	(in)	**16**	**14**	**8**	**10**	**10**	**10**
PIPE SCH.	(in)	40	40	40	40	40	40
PIPE ID	(mm)	381.00	333.35	202.72	254.51	254.51	254.51
ROUGHNESS	(mm)	0.046	0.046	0.046	0.046	0.046	0.046
VELOCITY	(m/s)	**1.576**	**1.030**	**2.784**	**3.533**	**3.533**	**3.533**
REYNOLDS NO.	(-)	3224378	1842640	3030012	4826875	4826875	4826875
FRICTION FACTOR	(-)	0.003	0.003	0.004	0.003	0.003	0.003421
ΔP / 100m	(kg/cm^2)	**0.022**	**0.011**	**0.143**	**0.174**	**0.174**	**0.174**
STRAIGHT LENGTH	(m)	220	100	16	78	852	1210
NO. OF PIPE ENTRANCE							
NO. OF PIPE EXIT							
NO. OF 90 ELBOW							
NO. OF TEE							
NO. OF GLOBE VALVE							
NO. OF GATE VALVE		3	1	1			5
NO. OF CHECK VALVE				1			
NO. OF BUTTER VALVE							
NO. OF BALL VALVE							
NO. OF CONTRACT							
NO. OF ENLARGER							
OTHER Ks							
PIPE ΔP	(kg/cm^2)	0.0481	0.0111	0.0223	0.1361	1.4866	2.1113
FITTING ΔP	(kg/cm^2)	0.0021	0.0003	0.0168	0.0000	0.0000	0.0190
TOTAL ΔP	(kg/cm^2)	**0.0502**	**0.0114**	**0.0391**	**0.1361**	**1.4866**	**2.1303**

NOTES

1. Differential shut off pressure at max impeller size shall be lower than pump differential pressure X 1.25.
   Max suction pressure = Max suction static head + Suction equipment design pressure
   For this pump, Max shut off pressure is calculated as below;
   Differential shut off pressure = vendor shut off head (131.1m)
2. Downstream design pressure is applied as 28.8 kg/cm2g.

: SELECTED DATA FOR PUMP DATASHEET

PUMP HYDRAULIC CALCULATION SHEET

LOTTE E&C

REV	DATE	BY	CHK'D	APP'D
2	07-Mar-2024	J.H.JUNG	S.K.PARK	C.M.BAE
1	06-Feb-2023	J.H.JUNG	S.K.PARK	C.M.BAE
0	30-Jun-2022	J.H.JUNG	S.K.PARK	C.M.BAE
3	14-Jun-2024	J.H.JUNG	S.K.PARK	C.M.BAE

REVISION

1	PROJECT :	LINE PROJECT	JOB NO. :	15005
2	CLIENT :	PT LOTTE CHEMICAL INDONESIA	DOCU. NO. :	LINE-900-BC-4-0001
3	LOCATION :	CILEGON, INDONESIA	ITEM NO. :	**90-P-312A/B**
4	UNIT :	WP5	NO. REQUIRED :	2 (TWO)
5	SERVICE :	**HP PROPYLENE EXPORT PUMPS**	SHEET :	2 OF 2

	FLUID		
7	LIQUID PUMPED		HP Propylene
8	OPERATING TEMPERATURE	(℃)	22.7 AMB
9	VISCOSITY @ OP. TEMP.	(cP)	0.095
10	VAPOR PRESS. @ OP. TEMP.	(kg/cm2A)	11.23
11	SP. GR. @ OP. TEMP.	(-)	0.510
12			
13	NORMAL CAPACITY (150 t/h)	(m3/hr)	294
14	EXCESS RATIO	(%)	10
15	RATED CAPACITY	(m3/hr)	324
16	**SUCTION**		
17	PRESS. @ EQUIPMENT	(kg/cm2A) (kg/cm2G)	
18	MIN. STATIC HEAD	(m)	
19	PIPE FRICTION	(kg/cm2)	
20		(kg/cm2)	
21		(kg/cm2)	
22		(kg/cm2)	
23			
24	NET SUC. PRESS.	(kg/cm2A) (kg/cm2G)	
25	NPSH a @ Suction Nozzle Center	(m)	
26	**DISCHARGE**		
27	PRESS. @ EQUIP. or BL	(kg/cm2A) (kg/cm2G)	
28	STATIC HEAD	(m)	
29	PIPE FRICTION	(kg/cm2)	
30		(kg/cm2)	
31		(kg/cm2)	
32		(kg/cm2)	
33		(kg/cm2)	
34		(kg/cm2)	
35		(kg/cm2)	
36		(kg/cm2)	
37			
38	TOTAL DISCH. PRESS.	(kg/cm2A) (kg/cm2G)	
39	SUC. PRESS.	(kg/cm2A) (kg/cm2G)	
40	DIFF. PRESS. (ΔP)	(kg/cm2)	
41	TOTAL HEAD (NET)	(m)	
42	TOTAL HEAD (TAKE)	(m)	
43	DIFF. PRESS. (ΔP) (TAKE)	(kg/cm2)	
44	TOTAL DISCH. PRESS. (TAKE)	(kg/cm2G)	
45			
46			
47			
48	**MAX SHUT OFF PRESSURE (NOTE 1)**		
49	MAX. SUC. STATIC HEAD	(m)	
50	SUC. EQUIP. DESIGN PRESS.	(kg/cm2G)	
51	MAX. SUC. PRESS.	(kg/cm2G)	
52	DIFF. PRESS. (ΔP) (TAKE)	(kg/cm2)	
53	SHUTOFF COEFF.	(%)	
54	MAX. SHUTOFF PRESS.	(kg/cm2G)	0.0

SKETCH

PUMP MINIMUM FLOW LINE

2 OPERATION + 0 STANDBY, TYPE : VERTICAL CAN

MINIMUM FLOWRATE IS VENDOR DATA.

PUMP MINIMUM FLOWRATE =	320	m3/hr	
PUMP DISCH. P. AS PER CURVE =	16.8	kg/cm2g	(1)
SUCTION EQUIPMENT PRESS. =	10.20	kg/cm2g	(2)
SUCTION EQUIPMENT HEAD =	22.2	m	
	1.13	kg/cm2	(3)
PIPE FRICTION =	0.28	kg/cm2	(4)
FE-3013 DEL P =	0.11	kg/cm2	(5)
OTHERS DEL P =		kg/cm2	(6)
OTHERS DEL P =		kg/cm2	(7)
FV-3013 DEL P =	**5.1**	**kg/cm2**	(8)

(8) = (1) - (2) - (3) - (4) - (5) - (6) - (7)

PIPE PRESSURE DROP

PIPING MATERIAL (C.S. or SUS.) : C.S. (3L1P)

		Suction		Discharge			
SECTION				**a**			
FLOW RATE	(m^3/h)			320			
PIPE ID	(in)			8			
PIPE SCH.	(in)			40			
PIPE ID	(mm)			202.72			
ROUGHNESS	(mm)			0.046			
VELOCITY	(m/s)			**2.754**			
REYNOLDS NO.	(-)			2997137			
FRICTION FACTOR	(-)			0.004			
ΔP / 100m	(kg/cm^2)			**0.140**			
STRAIGHT LENGTH	(m)			200			
NO. OF PIPE ENTRANCE							
NO. OF PIPE EXIT							
NO. OF 90 ELBOW							
NO. OF TEE							
NO. OF GLOBE VALVE							
NO. OF GATE VALVE							
NO. OF CHECK VALVE							
NO. OF BUTTER VALVE							
NO. OF BALL VALVE							
NO. OF CONTRACT							
NO. OF ENLARGER							
OTHER Ks							
PIPE ΔP	(kg/cm^2)			0.2802			
FITTING ΔP	(kg/cm^2)			0.0000			
TOTAL ΔP	(kg/cm^2)			**0.2802**			

NOTES

1. Differential shut off pressure at max impeller size shall be lower than pump differential pressure X 1.25.
   Max suction pressure = Max suction static head + Suction equipment design pressure

PUMP HYDRAULIC CALCULATION SHEET

LOTTE E&C

REV	DATE	BY	CHK'D	APP'D
2	07-Mar-2024	J.H.JUNG	S.K.PARK	C.M.BAE
1	06-Feb-2023	J.H.JUNG	S.K.PARK	C.M.BAE
0	30-Jun-2022	J.H.JUNG	S.K.PARK	C.M.BAE
3	14-Jun-2024	J.H.JUNG	S.K.PARK	C.M.BAE

REVISION

1	PROJECT :	LINE PROJECT	JOB NO. :	15005
2	CLIENT :	PT LOTTE CHEMICAL INDONESIA	DOCU. NO. :	LINE-900-BC-4-0001
3	LOCATION :	CILEGON, INDONESIA	ITEM NO. :	**90-P-313A/B**
4	UNIT :	WP5	NO. REQUIRED :	2 (TWO)
5	SERVICE :	**MIXED C4 EXPORT PUMPS**	SHEET :	1 OF 2

6	**FLUID**			
7	LIQUID PUMPED		Mixed C4	
8	OPERATING TEMPERATURE	(℃)	22.7	AMB
9	VISCOSITY @ OP. TEMP.	(cP)	0.156	
10	VAPOR PRESS. @ OP. TEMP.	(kg/cm2A)	2.63	
11	SP. GR. @ OP. TEMP.	(-)	0.604	
12				
13	NORMAL CAPACITY (50 t/h)	(m3/hr)	83	
14	EXCESS RATIO	(%)	10	
15	RATED CAPACITY	(m3/hr)	91	
16	**SUCTION**			
17	PRESS. @ EQUIPMENT	(kg/cm2A) (kg/cm2G)	2.63	1.6
18	MIN. STATIC HEAD	(m)	2.5	
19	PIPE FRICTION	(kg/cm2)	0.053	
20	STRAINER	(kg/cm2)	0.07	
21		(kg/cm2)		
22		(kg/cm2)		
23				
24	NET SUC. PRESS.	(kg/cm2A) (kg/cm2G)	2.658	1.6
25	NPSH a @ Suction Nozzle Center	(m)	0.5	
26	**DISCHARGE**			
27	PRESS. @ EQUIP. or BL	(kg/cm2A) (kg/cm2G)	3.13	2.1
28	STATIC HEAD	(m)	10.0	
29	PIPE FRICTION	(kg/cm2)	5.743	
30	FE-3021	(kg/cm2)	0.20	
31	FE-3022	(kg/cm2)	0.25	
32	FE-6009	(kg/cm2)	0.28	
33	LOADING ARM DEL P	(kg/cm2)	1.00	
34	MARGIN	(kg/cm2)	0.52	
35		(kg/cm2)		
36		(kg/cm2)		
37				
38	TOTAL DISCH. PRESS.	(kg/cm2A) (kg/cm2G)	11.7	10.7
39	SUC. PRESS.	(kg/cm2A) (kg/cm2G)	2.7	1.6
40	DIFF. PRESS. (ΔP)	(kg/cm2)	9.1	
41	TOTAL HEAD (NET)	(m)	150	
42	TOTAL HEAD (TAKE)	(m)	150	
43	DIFF. PRESS. (ΔP) (TAKE)	(kg/cm2)	9.1	
44	TOTAL DISCH. PRESS. (TAKE)	(kg/cm2G)	10.7	
45				
46				
47				
48	**MAX SHUT OFF PRESSURE (NOTE 1)**			
49	MAX. SUC. STATIC HEAD	(m)	21.7	
50	SUC. EQUIP. DESIGN PRESS.	(kg/cm2G)	6.0	
51	MAX. SUC. PRESS.	(kg/cm2G)	7.3	
52	DIFF. PRESS. (ΔP) (TAKE)	(kg/cm2)	9.1	
53	SHUTOFF COEFF.	(%)	125	
54	MAX. SHUTOFF PRESS.	(kg/cm2G)	18.6	

SKETCH

CASE : EXPORT TO NEW JETTY

2 OPERATION + 0 STANDBY, TYPE : VERTICAL CAN

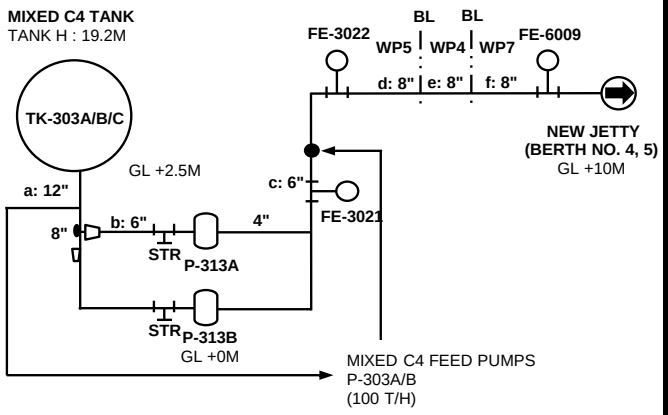

PIPE PRESSURE DROP

PIPING MATERIAL (C.S. or SUS.) : C.S. (1C1P)

		Suction		Discharge			
SECTION		**a**	**b**	**c**	**d**	**e**	**f**
FLOW RATE	(m^3/h)	364	91	182	182	364	364
PIPE ID	(in)	**12**	**6**	**6**	**8**	**8**	**8**
PIPE SCH.	(in)	STD	40	40	40	40	40
PIPE ID	(mm)	304.80	154.05	154.05	202.72	202.72	202.72
ROUGHNESS	(mm)	0.046	0.046	0.046	0.046	0.046	0.046
VELOCITY	(m/s)	**1.387**	**1.357**	**2.715**	**1.568**	**3.135**	**3.135**
REYNOLDS NO.	(-)	1636768	809618	1619236	1230482	2460965	2460965
FRICTION FACTOR	(-)	0.003	0.004	0.004	0.004	0.004	0.004
ΔP / 100m	(kg/cm^2)	**0.027**	**0.058**	**0.227**	**0.055**	**0.216**	**0.216**
STRAIGHT LENGTH	(m)	144	20	36	120	876	1686
NO. OF PIPE ENTRANCE							
NO. OF PIPE EXIT							
NO. OF 90 ELBOW							
NO. OF TEE							
NO. OF GLOBE VALVE							
NO. OF GATE VALVE		3	1	2	1		4
NO. OF CHECK VALVE				1			1
NO. OF BUTTER VALVE							
NO. OF BALL VALVE							
NO. OF CONTRACT							
NO. OF ENLARGER							
OTHER Ks							
PIPE ΔP	(kg/cm^2)	0.0384	0.0116	0.0816	0.0664	1.8927	3.643
FITTING ΔP	(kg/cm^2)	0.0020	0.0007	0.0228	0.0009	0.0000	0.036
TOTAL ΔP	(kg/cm^2)	**0.0404**	**0.0124**	**0.1044**	**0.0673**	**1.8927**	**3.679**

NOTES

1. Differential shut off pressure at max impeller size shall be lower than pump differential pressure X 1.25.
   Max suction pressure = Max suction static head + Suction equipment design pressure
2. Four(4) pumps(P-303A/B, P-313A/B) are running during export to jetty.

: SELECTED DATA FOR PUMP DATASHEET

PUMP HYDRAULIC CALCULATION SHEET

LOTTE E&C

REV	DATE	BY	CHK'D	APP'D
2	07-Mar-2024	J.H.JUNG	S.K.PARK	C.M.BAE
1	06-Feb-2023	J.H.JUNG	S.K.PARK	C.M.BAE
0	30-Jun-2022	J.H.JUNG	S.K.PARK	C.M.BAE
3	14-Jun-2024	J.H.JUNG	S.K.PARK	C.M.BAE

REVISION

1	PROJECT :	LINE PROJECT	JOB NO. :	15005
2	CLIENT :	PT LOTTE CHEMICAL INDONESIA	DOCU. NO. :	LINE-900-BC-4-0001
3	LOCATION :	CILEGON, INDONESIA	ITEM NO. :	**90-P-313A/B**
4	UNIT :	WP5	NO. REQUIRED :	2 (TWO)
5	SERVICE :	**MIXED C4 EXPORT PUMPS**	SHEET :	2 OF 2

	FLUID		
7	LIQUID PUMPED		Mixed C4
8	OPERATING TEMPERATURE	(℃)	22.7 AMB
9	VISCOSITY @ OP. TEMP.	(cP)	0.156
10	VAPOR PRESS. @ OP. TEMP.	(kg/cm2A)	2.63
11	SP. GR. @ OP. TEMP.	(-)	0.604
12			
13	NORMAL CAPACITY (50 t/h)	(m3/hr)	83
14	EXCESS RATIO	(%)	10
15	RATED CAPACITY	(m3/hr)	91
16	**SUCTION**		
17	PRESS. @ EQUIPMENT	(kg/cm2A) (kg/cm2G)	
18	MIN. STATIC HEAD	(m)	
19	PIPE FRICTION	(kg/cm2)	
20		(kg/cm2)	
21		(kg/cm2)	
22		(kg/cm2)	
23			
24	NET SUC. PRESS.	(kg/cm2A) (kg/cm2G)	
25	NPSH a @ Suction Nozzle Center	(m)	
26	**DISCHARGE**		
27	PRESS. @ EQUIP. or BL	(kg/cm2A) (kg/cm2G)	
28	STATIC HEAD	(m)	
29	PIPE FRICTION	(kg/cm2)	
30		(kg/cm2)	
31		(kg/cm2)	
32		(kg/cm2)	
33		(kg/cm2)	
34		(kg/cm2)	
35		(kg/cm2)	
36		(kg/cm2)	
37			
38	TOTAL DISCH. PRESS.	(kg/cm2A) (kg/cm2G)	
39	SUC. PRESS.	(kg/cm2A) (kg/cm2G)	
40	DIFF. PRESS. (ΔP)	(kg/cm2)	
41	TOTAL HEAD (NET)	(m)	
42	TOTAL HEAD (TAKE)	(m)	
43	DIFF. PRESS. (ΔP) (TAKE)	(kg/cm2)	
44	TOTAL DISCH. PRESS. (TAKE)	(kg/cm2G)	
45			
46			
47			
48	**MAX SHUT OFF PRESSURE (NOTE 1)**		
49	MAX. SUC. STATIC HEAD	(m)	
50	SUC. EQUIP. DESIGN PRESS.	(kg/cm2G)	
51	MAX. SUC. PRESS.	(kg/cm2G)	
52	DIFF. PRESS. (ΔP) (TAKE)	(kg/cm2)	
53	SHUTOFF COEFF.	(%)	
54	MAX. SHUTOFF PRESS.	(kg/cm2G)	

SKETCH

PUMP MINIMUM FLOW LINE

2 OPERATION + 0 STANDBY, TYPE : VERTICAL CAN

MINIMUM FLOWRATE IS VENDOR DATA.

PUMP MINIMUM FLOWRATE =	76	m3/hr	
PUMP DISCH. P. AS PER CURVE =	11.8	kg/cm2g	(1)
SUCTION EQUIPMENT PRESS. =	1.60	kg/cm2g	(2)
SUCTION EQUIPMENT HEAD =	21.7	m	
	1.31	kg/cm2	(3)
PIPE FRICTION =	0.75	kg/cm2	(4)
FE-3021 DEL P =	0.20	kg/cm2	(5)
OTHERS DEL P =		kg/cm2	(6)
OTHERS DEL P =		kg/cm2	(7)
FV-3021 DEL P =	**8.0**	**kg/cm2**	(8)

(8) = (1) - (2) - (3) - (4) - (5) - (6) - (7)

PIPE PRESSURE DROP

PIPING MATERIAL (C.S. or SUS.) : C.S. (1C1P)

		Suction		Discharge			
SECTION				**a**	**b**		
FLOW RATE	(m^3/h)			76	152		
PIPE ID	(in)			4	8		
PIPE SCH.	(in)			40	40		
PIPE ID	(mm)			102.26	202.72		
ROUGHNESS	(mm)			0.046	0.046		
VELOCITY	(m/s)			**2.570**	**1.308**		
REYNOLDS NO.	(-)			1017716	1026753		
FRICTION FACTOR	(-)			0.004	0.004		
ΔP / 100m	(kg/cm^2)			**0.335**	**0.039**		
STRAIGHT LENGTH	(m)			200	200		
NO. OF PIPE ENTRANCE							
NO. OF PIPE EXIT							
NO. OF 90 ELBOW							
NO. OF TEE							
NO. OF GLOBE VALVE							
NO. OF GATE VALVE							
NO. OF CHECK VALVE							
NO. OF BUTTER VALVE							
NO. OF BALL VALVE							
NO. OF CONTRACT							
NO. OF ENLARGER							
OTHER Ks							
PIPE ΔP	(kg/cm^2)			0.6702	0.0777		
FITTING ΔP	(kg/cm^2)			0.0000	0.0000		
TOTAL ΔP	(kg/cm^2)			**0.6702**	**0.0777**		

NOTES

1. Differential shut off pressure at max impeller size shall be lower than pump differential pressure X 1.25.
   Max suction pressure = Max suction static head + Suction equipment design pressure

2. Four(4) pumps(P-303A/B, P-313A/B) are running during export to jetty.

PUMP HYDRAULIC CALCULATION SHEET

LOTTE E&C

REV	DATE	BY	CHK'D	APP'D
2	07-Mar-2024	J.H.JUNG	S.K.PARK	C.M.BAE
1	06-Feb-2023	J.H.JUNG	S.K.PARK	C.M.BAE
0	30-Jun-2022	J.H.JUNG	S.K.PARK	C.M.BAE
3	14-Jun-2024	J.H.JUNG	S.K.PARK	C.M.BAE

REVISION

1	PROJECT :	LINE PROJECT	JOB NO. :	15005
2	CLIENT :	PT LOTTE CHEMICAL INDONESIA	DOCU. NO. :	LINE-900-BC-4-0001
3	LOCATION :	CILEGON, INDONESIA	ITEM NO. :	**90-P-314A/B**
4	UNIT :	WP5	NO. REQUIRED :	2 (TWO)
5	SERVICE :	**BUTADIENE EXPORT PUMPS**	SHEET :	1 OF 2

	FLUID			
7	LIQUID PUMPED		Butadiene	
8	OPERATING TEMPERATURE	(℃)	5.0	
9	VISCOSITY @ OP. TEMP.	(cP)	0.168	
10	VAPOR PRESS. @ OP. TEMP.	(kg/cm2A)	1.47	
11	SP. GR. @ OP. TEMP.	(-)	0.640	
12				
13	NORMAL CAPACITY (150 t/h)	(m3/hr)	234	
14	EXCESS RATIO	(%)	10	
15	RATED CAPACITY	(m3/hr)	258	
16	**SUCTION**			
17	PRESS. @ EQUIPMENT	(kg/cm2A) (kg/cm2G)	1.47	0.44
18	MIN. STATIC HEAD	(m)	3.5	(NOTE 3)
19	PIPE FRICTION	(kg/cm2)	0.103	
20	STRAINER	(kg/cm2)	0.07	
21		(kg/cm2)		
22		(kg/cm2)		
23				
24	NET SUC. PRESS.	(kg/cm2A) (kg/cm2G)	1.521	0.5
25	NPSH a @ Suction Nozzle Center	(m)	0.8	
26	**DISCHARGE**			
27	PRESS. @ EQUIP. or BL	(kg/cm2A) (kg/cm2G)	1.97	0.94
28	STATIC HEAD	(m)	10.0	
29	PIPE FRICTION	(kg/cm2)	12.518	
30	FE-3026	(kg/cm2)	0.48	
31	FE-3027	(kg/cm2)	0.48	
32	FE-6007	(kg/cm2)	0.35	
33	LOADING ARM DEL P	(kg/cm2)	1.00	
34	MARGIN	(kg/cm2)	2.60	
35		(kg/cm2)		
36		(kg/cm2)		
37				
38	TOTAL DISCH. PRESS.	(kg/cm2A) (kg/cm2G)	20.0	19.0
39	SUC. PRESS.	(kg/cm2A) (kg/cm2G)	1.5	0.5
40	DIFF. PRESS. (ΔP)	(kg/cm2)	18.5	
41	TOTAL HEAD (NET)	(m)	289	
42	TOTAL HEAD (TAKE)	(m)	289	
43	DIFF. PRESS. (ΔP) (TAKE)	(kg/cm2)	18.5	
44	TOTAL DISCH. PRESS. (TAKE)	(kg/cm2G)	19.0	
45				
46				
47				
48	**MAX SHUT OFF PRESSURE (NOTE 1)**			
49	MAX. SUC. STATIC HEAD	(m)	21.7	
50	SUC. EQUIP. DESIGN PRESS.	(kg/cm2G)	6.0	
51	MAX. SUC. PRESS.	(kg/cm2G)	7.4	
52	DIFF. PRESS. (ΔP) (TAKE)	(kg/cm2)	18.5	
53	SHUTOFF COEFF.	(%)	125	
54	MAX. SHUTOFF PRESS.	(kg/cm2G)	30.5	

SKETCH

CASE : EXPORT TO NEW JETTY

2 OPERATION + 0 STANDBY, TYPE : VERTICAL CAN

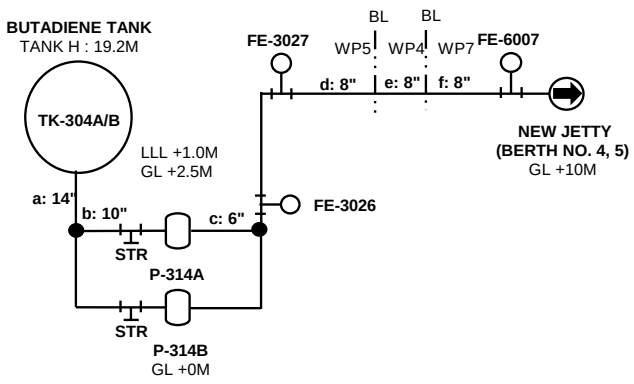

PIPE PRESSURE DROP

PIPING MATERIAL (C.S. or SUS.) : C.S. (3C1P)

		Suction		Discharge			
SECTION		**a**	**b**	**c**	**d**	**e**	**f**
FLOW RATE	(m^3/h)	516	258	258	516	516	516
PIPE ID	(in)	**14**	**10**	**6**	**8**	**8**	**8**
PIPE SCH.	(in)	STD	40	40	40	40	40
PIPE ID	(mm)	336.55	254.51	154.05	202.72	202.72	202.72
ROUGHNESS	(mm)	0.046	0.046	0.046	0.046	0.046	0.046
VELOCITY	(m/s)	**1.610**	**1.408**	**3.843**	**4.438**	**4.438**	**4.438**
REYNOLDS NO.	(-)	2064467	1364969	2255100	3427370	3427370	3427370
FRICTION FACTOR	(-)	0.003	0.004	0.004	0.004	0.004	0.003591
ΔP / 100m	(kg/cm^2)	**0.034**	**0.036**	**0.477**	**0.455**	**0.455**	**0.455**
STRAIGHT LENGTH	(m)	150	130	16	137	876	1692
NO. OF PIPE ENTRANCE							
NO. OF PIPE EXIT							
NO. OF 90 ELBOW							
NO. OF TEE							
NO. OF GLOBE VALVE							
NO. OF GATE VALVE		5	1	1	1		4
NO. OF CHECK VALVE				1			1
NO. OF BUTTER VALVE							
NO. OF BALL VALVE							
NO. OF CONTRACT							
NO. OF ENLARGER							
OTHER Ks							
PIPE ΔP	(kg/cm^2)	0.0504	0.0470	0.0744	0.6230	3.9891	7.7050
FITTING ΔP	(kg/cm^2)	0.0047	0.0008	0.0422	0.0078	0.0000	0.0768
TOTAL ΔP	(kg/cm^2)	**0.0551**	**0.0477**	**0.1167**	**0.6307**	**3.9891**	**7.7818**

NOTES

1. Differential shut off pressure at max impeller size shall be lower than pump differential pressure X 1.25.
   Max suction pressure = Max suction static head + Suction equipment design pressure
2. BD is not circulated from/to jetty during export.
3. LLL is considered for NPSHa.

: SELECTED DATA FOR PUMP DATASHEET

PUMP HYDRAULIC CALCULATION SHEET

LOTTE E&C

REV	DATE	BY	CHK'D	APP'D
2	07-Mar-2024	J.H.JUNG	S.K.PARK	C.M.BAE
1	06-Feb-2023	J.H.JUNG	S.K.PARK	C.M.BAE
0	30-Jun-2022	J.H.JUNG	S.K.PARK	C.M.BAE
3	14-Jun-2024	J.H.JUNG	S.K.PARK	C.M.BAE

REVISION

1	PROJECT :	LINE PROJECT	JOB NO. :	15005
2	CLIENT :	PT LOTTE CHEMICAL INDONESIA	DOCU. NO. :	LINE-900-BC-4-0001
3	LOCATION :	CILEGON, INDONESIA	ITEM NO. :	**90-P-314A/B**
4	UNIT :	WP5	NO. REQUIRED :	2 (TWO)
5	SERVICE :	**BUTADIENE EXPORT PUMPS**	SHEET :	2 OF 2

	FLUID		
7	LIQUID PUMPED		Butadiene
8	OPERATING TEMPERATURE	(℃)	5.0
9	VISCOSITY @ OP. TEMP.	(cP)	0.168
10	VAPOR PRESS. @ OP. TEMP.	(kg/cm2A)	1.47
11	SP. GR. @ OP. TEMP.	(-)	0.640
12			
13	NORMAL CAPACITY (150 t/h)	(m3/hr)	234
14	EXCESS RATIO	(%)	10
15	RATED CAPACITY	(m3/hr)	258
16	**SUCTION**		
17	PRESS. @ EQUIPMENT (kg/cm2A)	(kg/cm2G)	
18	MIN. STATIC HEAD	(m)	
19	PIPE FRICTION	(kg/cm2)	
20		(kg/cm2)	
21		(kg/cm2)	
22		(kg/cm2)	
23			
24	NET SUC. PRESS. (kg/cm2A)	(kg/cm2G)	
25	NPSH a @ Suction Nozzle Center	(m)	
26	**DISCHARGE**		
27	PRESS. @ EQUIP. or BL (kg/cm2A)	(kg/cm2G)	
28	STATIC HEAD	(m)	
29	PIPE FRICTION	(kg/cm2)	
30		(kg/cm2)	
31		(kg/cm2)	
32		(kg/cm2)	
33		(kg/cm2)	
34		(kg/cm2)	
35		(kg/cm2)	
36		(kg/cm2)	
37			
38	TOTAL DISCH. PRESS. (kg/cm2A)	(kg/cm2G)	
39	SUC. PRESS. (kg/cm2A)	(kg/cm2G)	
40	DIFF. PRESS. (ΔP)	(kg/cm2)	
41	TOTAL HEAD (NET)	(m)	
42	TOTAL HEAD (TAKE)	(m)	
43	DIFF. PRESS. (ΔP) (TAKE)	(kg/cm2)	
44	TOTAL DISCH. PRESS. (TAKE)	(kg/cm2G)	
45			
46			
47			
48	**MAX SHUT OFF PRESSURE (NOTE 1)**		
49	MAX. SUC. STATIC HEAD	(m)	
50	SUC. EQUIP. DESIGN PRESS.	(kg/cm2G)	
51	MAX. SUC. PRESS.	(kg/cm2G)	
52	DIFF. PRESS. (ΔP) (TAKE)	(kg/cm2)	
53	SHUTOFF COEFF.	(%)	
54	MAX. SHUTOFF PRESS.	(kg/cm2G)	

SKETCH

PUMP MINIMUM FLOW LINE

2 OPERATION + 0 STANDBY, TYPE : VERTICAL CAN

MINIMUM FLOWRATE IS VENDOR DATA.

PUMP MINIMUM FLOWRATE =	300	m3/hr	
PUMP DISCH. P. AS PER CURVE =	21.6	kg/cm2g	(1)
SUCTION EQUIPMENT PRESS. =	0.44	kg/cm2g	(2)
SUCTION EQUIPMENT HEAD =	21.7	m	
	1.39	kg/cm2	(3)
PIPE FRICTION =	1.29	kg/cm2	(4)
FE-3026 DEL P =	0.48	kg/cm2	(5)
OTHERS DEL P =		kg/cm2	(6)
OTHERS DEL P =		kg/cm2	(7)
FV-3026 DEL P =	**18.0**	**kg/cm2**	(8)

(8) = (1) - (2) - (3) - (4) - (5) - (6) - (7)

PIPE PRESSURE DROP

PIPING MATERIAL (C.S. or SUS.) : C.S. (3C1P)

		Suction		Discharge			
SECTION				**a**			
FLOW RATE	(m^3/h)			300			
PIPE ID	(in)			**6**			
PIPE SCH.	(in)			40			
PIPE ID	(mm)			154.05			
ROUGHNESS	(mm)			0.046			
VELOCITY	(m/s)			**4.471**			
REYNOLDS NO.	(-)			2623837			
FRICTION FACTOR	(-)			0.004			
ΔP / 100m	(kg/cm^2)			**0.644**			
STRAIGHT LENGTH	(m)			200			
NO. OF PIPE ENTRANCE							
NO. OF PIPE EXIT							
NO. OF 90 ELBOW							
NO. OF TEE							
NO. OF GLOBE VALVE							
NO. OF GATE VALVE							
NO. OF CHECK VALVE							
NO. OF BUTTER VALVE							
NO. OF BALL VALVE							
NO. OF CONTRACT							
NO. OF ENLARGER							
OTHER Ks							
PIPE ΔP	(kg/cm^2)			1.2881			
FITTING ΔP	(kg/cm^2)			0.0000			
TOTAL ΔP	(kg/cm^2)			**1.2881**			

NOTES

1. Differential shut off pressure at max impeller size shall be lower than pump differential pressure X 1.25.
   Max suction pressure = Max suction static head + Suction equipment design pressure
2. BD is not circulated from/to jetty during export.

PUMP HYDRAULIC CALCULATION SHEET

LOTTE E&C

REV	DATE	BY	CHK'D	APP'D
2	07-Mar-2024	J.H.JUNG	S.K.PARK	C.M.BAE
1	06-Feb-2023	J.H.JUNG	S.K.PARK	C.M.BAE
0	30-Jun-2022	J.H.JUNG	S.K.PARK	C.M.BAE
3	14-Jun-2024	J.H.JUNG	S.K.PARK	C.M.BAE

REVISION

1	PROJECT :	LINE PROJECT	JOB NO. :	15005
2	CLIENT :	PT LOTTE CHEMICAL INDONESIA	DOCU. NO. :	LINE-900-BC-4-0001
3	LOCATION :	CILEGON, INDONESIA	ITEM NO. :	**90-P-315A/B**
4	UNIT :	WP5	NO. REQUIRED :	2 (TWO)
5	SERVICE :	**C4 RAFFINATE EXPORT PUMPS**	SHEET :	1 OF 3

	FLUID			
7	LIQUID PUMPED		C4 Raffinate	
8	OPERATING TEMPERATURE	(℃)	22.7	AMB
9	VISCOSITY @ OP. TEMP.	(cP)	0.163	
10	VAPOR PRESS. @ OP. TEMP.	(kg/cm2A)	2.8	
11	SP. GR. @ OP. TEMP.	(-)	0.586	
12				
13	NORMAL CAPACITY (200 t/h)	(m3/hr)	341	
14	EXCESS RATIO	(%)	10	
15	RATED CAPACITY	(m3/hr)	375	
16	**SUCTION**			
17	PRESS. @ EQUIPMENT	(kg/cm2A) (kg/cm2G)	2.80	1.8
18	MIN. STATIC HEAD	(m)	3.5	(NOTE 2)
19	PIPE FRICTION	(kg/cm2)	0.107	
20	STRAINER	(kg/cm2)	0.07	
21		(kg/cm2)		
22		(kg/cm2)		
23				
24	NET SUC. PRESS.	(kg/cm2A) (kg/cm2G)	2.829	1.8
25	NPSH a @ Suction Nozzle Center	(m)	0.5	
26	**DISCHARGE**			
27	PRESS. @ EQUIP. or BL	(kg/cm2A) (kg/cm2G)	3.30	2.3
28	STATIC HEAD	(m)	10.0	
29	PIPE FRICTION	(kg/cm2)	6.180	
30	FE-3029	(kg/cm2)	0.36	
31	FE-3030	(kg/cm2)	0.36	
32	FE-6008	(kg/cm2)	0.38	
33	LOADING ARM ΔP	(kg/cm2)	0.55	
34	MARGIN	(kg/cm2)	0.25	
35		(kg/cm2)		
36		(kg/cm2)		
37				
38	TOTAL DISCH. PRESS.	(kg/cm2A) (kg/cm2G)	12.0	10.9
39	SUC. PRESS.	(kg/cm2A) (kg/cm2G)	2.8	1.8
40	DIFF. PRESS. (ΔP)	(kg/cm2)	9.1	
41	TOTAL HEAD (NET)	(m)	156	
42	TOTAL HEAD (TAKE)	(m)	156	
43	DIFF. PRESS. (ΔP) (TAKE)	(kg/cm2)	9.1	
44	TOTAL DISCH. PRESS. (TAKE)	(kg/cm2G)	10.9	
45				
46				
47				
48	**MAX SHUT OFF PRESSURE (NOTE 1)**			
49	MAX. SUC. STATIC HEAD	(m)	18.4	
50	SUC. EQUIP. DESIGN PRESS.	(kg/cm2G)	6.00	
51	MAX. SUC. PRESS.	(kg/cm2G)	7.1	
52	DIFF. PRESS. (ΔP) (TAKE)	(kg/cm2)	9.1	
53	SHUTOFF COEFF.	(%)	125	
54	MAX. SHUTOFF PRESS.	(kg/cm2G)	18.5	

SKETCH

CASE 1 : EXPORT TO NEW JETTY (GOVERNING)

2 OPERATION + 0 STANDBY, TYPE : VERTICAL CAN

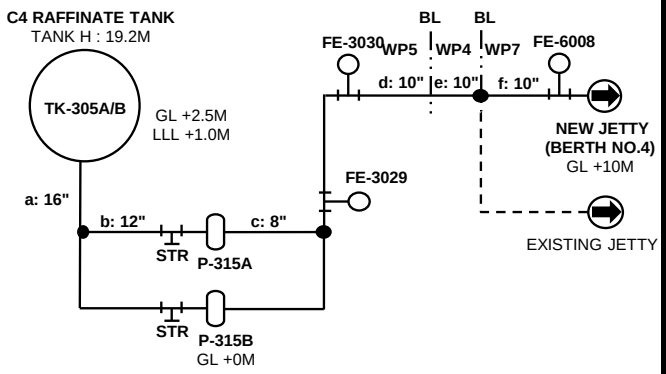

PIPE PRESSURE DROP

PIPING MATERIAL (C.S. or SUS.) : C.S. (1C1P)

		Suction		Discharge			
SECTION		**a**	**b**	**c**	**d**	**e**	**f**
FLOW RATE	(m^3/h)	751	375	375	751	751	751
PIPE ID	(in)	**16**	**12**	**8**	**10**	**10**	**10**
PIPE SCH.	(in)	STD	STD	40	40	40	40
PIPE ID	(mm)	387.35	304.80	202.72	254.51	254.51	254.51
ROUGHNESS	(mm)	0.046	0.046	0.046	0.046	0.046	0.046
VELOCITY	(m/s)	**1.770**	**1.429**	**3.231**	**4.100**	**4.100**	**4.100**
REYNOLDS NO.	(-)	2464723	1566126	2354751	3751171	3751171	3751171
FRICTION FACTOR	(-)	0.003	0.003	0.004	0.003	0.003	0.003
ΔP / 100m	(kg/cm^2)	**0.031**	**0.028**	**0.223**	**0.271**	**0.271**	**0.271**
STRAIGHT LENGTH	(m)	240	100	16	84	876	1272
NO. OF PIPE ENTRANCE							
NO. OF PIPE EXIT							
NO. OF 90 ELBOW							
NO. OF TEE							
NO. OF GLOBE VALVE							
NO. OF GATE VALVE		3	1	1	1		4
NO. OF CHECK VALVE				1			1
NO. OF BUTTER VALVE							
NO. OF BALL VALVE							
NO. OF CONTRACT							
NO. OF ENLARGER							
OTHER Ks							
PIPE ΔP	(kg/cm^2)	0.0753	0.0275	0.0348	0.2279	2.3766	3.4509
FITTING ΔP	(kg/cm^2)	0.0031	0.0007	0.0260	0.0059	0.0000	0.0577
TOTAL ΔP	(kg/cm^2)	**0.0784**	**0.0282**	**0.0607**	**0.2338**	**2.3766**	**3.5086**

NOTES

1. Differential shut off pressure at max impeller size shall be lower than pump differential pressure X 1.25.
   Max suction pressure = Max suction static head + Suction equipment design pressure
2. LLL is considered for NPSHa.

: SELECTED DATA FOR PUMP DATASHEET

PUMP HYDRAULIC CALCULATION SHEET

LOTTE E&C

REV	DATE	BY	CHK'D	APP'D
2	07-Mar-2024	J.H.JUNG	S.K.PARK	C.M.BAE
1	06-Feb-2023	J.H.JUNG	S.K.PARK	C.M.BAE
0	30-Jun-2022	J.H.JUNG	S.K.PARK	C.M.BAE
3	14-Jun-2024	J.H.JUNG	S.K.PARK	C.M.BAE

REVISION

1	PROJECT :	LINE PROJECT	JOB NO. :	15005
2	CLIENT :	PT LOTTE CHEMICAL INDONESIA	DOCU. NO. :	LINE-900-BC-4-0001
3	LOCATION :	CILEGON, INDONESIA	ITEM NO. :	**90-P-315A/B**
4	UNIT :	WP5	NO. REQUIRED :	2 (TWO)
5	SERVICE :	**C4 RAFFINATE EXPORT PUMPS**	SHEET :	2 OF 3

	FLUID				
7	LIQUID PUMPED			C4 Raffinate	
8	OPERATING TEMPERATURE		(℃)	22.7	AMB
9	VISCOSITY @ OP. TEMP.		(cP)	0.163	
10	VAPOR PRESS. @ OP. TEMP.		(kg/cm2A)	2.8	
11	SP. GR. @ OP. TEMP.		(-)	0.586	
12					
13	NORMAL CAPACITY	(200 t/h)	(m3/hr)	341	
14	EXCESS RATIO		(%)	10	
15	RATED CAPACITY		(m3/hr)	375	
16	**SUCTION**				
17	PRESS. @ EQUIPMENT	(kg/cm2A)	(kg/cm2G)	2.80	1.8
18	MIN. STATIC HEAD		(m)	3.5	(NOTE 2)
19	PIPE FRICTION		(kg/cm2)	0.107	
20	STRAINER		(kg/cm2)	0.07	
21			(kg/cm2)		
22			(kg/cm2)		
23					
24	NET SUC. PRESS.	(kg/cm2A)	(kg/cm2G)	2.829	1.8
25	NPSH a @ Suction Nozzle Center		(m)	0.5	
26	**DISCHARGE**				
27	PRESS. @ EQUIP. or BL	(kg/cm2A)	(kg/cm2G)	3.30	2.3
28	STATIC HEAD		(m)	10.0	
29	PIPE FRICTION		(kg/cm2)	3.978	
30	FE-3029		(kg/cm2)	0.36	
31	FE-3030		(kg/cm2)	0.36	
32	FE-6101		(kg/cm2)	0.38	
33	LOADING ARM ΔP		(kg/cm2)	1.00	
34			(kg/cm2)		
35			(kg/cm2)		
36			(kg/cm2)		
37					
38	TOTAL DISCH. PRESS.	(kg/cm2A)	(kg/cm2G)	10.0	8.9
39	SUC. PRESS.	(kg/cm2A)	(kg/cm2G)	2.8	1.8
40	DIFF. PRESS. (ΔP)		(kg/cm2)	7.1	
41	TOTAL HEAD (NET)		(m)	122	
42	TOTAL HEAD (TAKE)		(m)		
43	DIFF. PRESS. (ΔP) (TAKE)		(kg/cm2)		
44	TOTAL DISCH. PRESS. (TAKE)		(kg/cm2G)		
45					
46					
47					
48	**MAX SHUT OFF PRESSURE (NOTE 1)**				
49	MAX. SUC. STATIC HEAD		(m)		
50	SUC. EQUIP. DESIGN PRESS.		(kg/cm2G)		
51	MAX. SUC. PRESS.		(kg/cm2G)		
52	DIFF. PRESS. (ΔP) (TAKE)		(kg/cm2)		
53	SHUTOFF COEFF.		(%)		
54	MAX. SHUTOFF PRESS.		(kg/cm2G)		

SKETCH

CASE 2 : EXPORT TO EXISTING JETTY

2 OPERATION + 0 STANDBY, TYPE : VERTICAL CAN

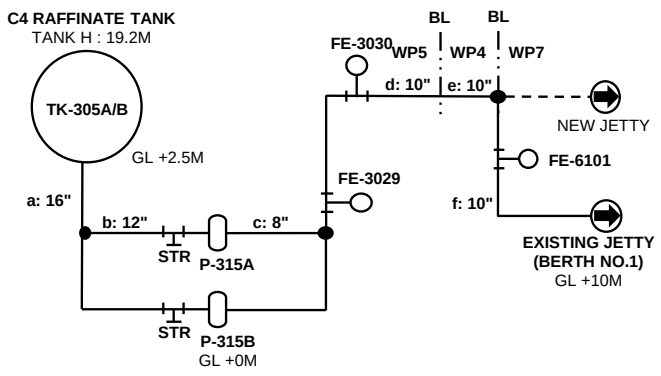

PIPE PRESSURE DROP

PIPING MATERIAL (C.S. or SUS.) : C.S. (1C1P)

		Suction		Discharge			
SECTION		**a**	**b**	**c**	**d**	**e**	**f**
FLOW RATE	(m^3/h)	751	375	375	751	751	751
PIPE ID	(in)	**16**	**12**	**8**	**10**	**10**	**10**
PIPE SCH.	(in)	STD	STD	40	40	40	40
PIPE ID	(mm)	387.35	304.80	202.72	254.51	254.51	254.51
ROUGHNESS	(mm)	0.046	0.046	0.046	0.046	0.046	0.046
VELOCITY	(m/s)	**1.770**	**1.429**	**3.231**	**4.100**	**4.100**	**4.100**
REYNOLDS NO.	(-)	2464723	1566126	2354751	3751171	3751171	3751171
FRICTION FACTOR	(-)	0.003	0.003	0.004	0.003	0.003	0.003
ΔP / 100m	(kg/cm^2)	**0.031**	**0.028**	**0.223**	**0.271**	**0.271**	**0.271**
STRAIGHT LENGTH	(m)	240	100	16	84	900	432
NO. OF PIPE ENTRANCE							
NO. OF PIPE EXIT							
NO. OF 90 ELBOW							
NO. OF TEE							
NO. OF GLOBE VALVE							
NO. OF GATE VALVE		3	1	1	1		6
NO. OF CHECK VALVE				1			1
NO. OF BUTTER VALVE							
NO. OF BALL VALVE							
NO. OF CONTRACT							
NO. OF ENLARGER							
OTHER Ks							
PIPE ΔP	(kg/cm^2)	0.0753	0.0275	0.0348	0.2279	2.4417	1.172002
FITTING ΔP	(kg/cm^2)	0.0031	0.0007	0.0260	0.0059	0.0000	0.0695
TOTAL ΔP	(kg/cm^2)	**0.0784**	**0.0282**	**0.0607**	**0.2338**	**2.4417**	**1.241**

NOTES

1. Differential shut off pressure at max impeller size shall be lower than pump differential pressure X 1.3.
   Max suction pressure = Max suction static head + Suction equipment design pressure
2. LLL is considered for NPSHa.

PUMP HYDRAULIC CALCULATION SHEET

LOTTE E&C

REV	DATE	BY	CHK'D	APP'D
2	07-Mar-2024	J.H.JUNG	S.K.PARK	C.M.BAE
1	06-Feb-2023	J.H.JUNG	S.K.PARK	C.M.BAE
0	30-Jun-2022	J.H.JUNG	S.K.PARK	C.M.BAE
3	14-Jun-2024	J.H.JUNG	S.K.PARK	C.M.BAE

REVISION

1	PROJECT :	LINE PROJECT	JOB NO. :	15005
2	CLIENT :	PT LOTTE CHEMICAL INDONESIA	DOCU. NO. :	LINE-900-BC-4-0001
3	LOCATION :	CILEGON, INDONESIA	ITEM NO. :	**90-P-315A/B**
4	UNIT :	WP5	NO. REQUIRED :	2 (TWO)
5	SERVICE :	**C4 RAFFINATE EXPORT PUMPS**	SHEET :	3 OF 3

	FLUID		
7	LIQUID PUMPED		C4 Raffinate
8	OPERATING TEMPERATURE	(℃)	22.7 AMB
9	VISCOSITY @ OP. TEMP.	(cP)	0.163
10	VAPOR PRESS. @ OP. TEMP.	(kg/cm2A)	2.8
11	SP. GR. @ OP. TEMP.	(-)	0.586
12			
13	NORMAL CAPACITY (200 t/h)	(m3/hr)	341
14	EXCESS RATIO	(%)	10
15	RATED CAPACITY	(m3/hr)	375
16	**SUCTION**		
17	PRESS. @ EQUIPMENT	(kg/cm2A) (kg/cm2G)	
18	MIN. STATIC HEAD	(m)	
19	PIPE FRICTION	(kg/cm2)	
20		(kg/cm2)	
21		(kg/cm2)	
22		(kg/cm2)	
23			
24	NET SUC. PRESS.	(kg/cm2A) (kg/cm2G)	
25	NPSH a @ Suction Nozzle Center	(m)	
26	**DISCHARGE**		
27	PRESS. @ EQUIP. or BL	(kg/cm2A) (kg/cm2G)	
28	STATIC HEAD	(m)	
29	PIPE FRICTION	(kg/cm2)	
30		(kg/cm2)	
31		(kg/cm2)	
32		(kg/cm2)	
33		(kg/cm2)	
34		(kg/cm2)	
35		(kg/cm2)	
36		(kg/cm2)	
37			
38	TOTAL DISCH. PRESS.	(kg/cm2A) (kg/cm2G)	
39	SUC. PRESS.	(kg/cm2A) (kg/cm2G)	
40	DIFF. PRESS. (ΔP)	(kg/cm2)	
41	TOTAL HEAD (NET)	(m)	
42	TOTAL HEAD (TAKE)	(m)	
43	DIFF. PRESS. (ΔP) (TAKE)	(kg/cm2)	
44	TOTAL DISCH. PRESS. (TAKE)	(kg/cm2G)	
45			
46			
47			
48	**MAX SHUT OFF PRESSURE (NOTE 1)**		
49	MAX. SUC. STATIC HEAD	(m)	
50	SUC. EQUIP. DESIGN PRESS.	(kg/cm2G)	
51	MAX. SUC. PRESS.	(kg/cm2G)	
52	DIFF. PRESS. (ΔP) (TAKE)	(kg/cm2)	
53	SHUTOFF COEFF.	(%)	
54	MAX. SHUTOFF PRESS.	(kg/cm2G)	

SKETCH

PUMP MINIMUM FLOW LINE

2 OPERATION + 0 STANDBY, TYPE : VERTICAL CAN

MINIMUM FLOWRATE IS VENDOR DATA.

PUMP MINIMUM FLOWRATE =	320	m3/hr	
PUMP DISCH. P. AS PER CURVE =	12.3	kg/cm2g	(1)
SUCTION EQUIPMENT PRESS. =	1.77	kg/cm2g	(2)
SUCTION EQUIPMENT HEAD =	21.7	m	
	1.27	kg/cm2	(3)
PIPE FRICTION =	0.33	kg/cm2	(4)
FE-3029 DEL P =	0.36	kg/cm2	(5)
OTHERS DEL P =		kg/cm2	(6)
OTHERS DEL P =		kg/cm2	(7)
FV-3029 DEL P =	**8.6**	**kg/cm2**	(8)

(8) = (1) - (2) - (3) - (4) - (5) - (6) - (7)

PIPE PRESSURE DROP

PIPING MATERIAL (C.S. or SUS.) : C.S. (1C1P)

		Suction		Discharge			
SECTION				**a**			
FLOW RATE	(m^3/h)			320			
PIPE ID	(in)			8			
PIPE SCH.	(in)			40			
PIPE ID	(mm)			202.72			
ROUGHNESS	(mm)			0.046			
VELOCITY	(m/s)			**2.754**			
REYNOLDS NO.	(-)			2007105			
FRICTION FACTOR	(-)			0.004			
ΔP / 100m	(kg/cm^2)			**0.163**			
STRAIGHT LENGTH	(m)			200			
NO. OF PIPE ENTRANCE							
NO. OF PIPE EXIT							
NO. OF 90 ELBOW							
NO. OF TEE							
NO. OF GLOBE VALVE							
NO. OF GATE VALVE							
NO. OF CHECK VALVE							
NO. OF BUTTER VALVE							
NO. OF BALL VALVE							
NO. OF CONTRACT							
NO. OF ENLARGER							
OTHER Ks							
PIPE ΔP	(kg/cm^2)			0.3253			
FITTING ΔP	(kg/cm^2)			0.0000			
TOTAL ΔP	(kg/cm^2)			**0.3253**			

NOTES

1. Differential shut off pressure at max impeller size shall be lower than pump differential pressure X 1.25.
   Max suction pressure = Max suction static head + Suction equipment design pressure

PUMP HYDRAULIC CALCULATION SHEET

LOTTE E&C

REV	DATE	BY	CHK'D	APP'D
2	07-Mar-2024	J.H.JUNG	S.K.PARK	C.M.BAE
1	06-Feb-2023	J.H.JUNG	S.K.PARK	C.M.BAE
0	30-Jun-2022	J.H.JUNG	S.K.PARK	C.M.BAE
3	14-Jun-2024	J.H.JUNG	S.K.PARK	C.M.BAE

REVISION

1	PROJECT :	LINE PROJECT	JOB NO. :	15005
2	CLIENT :	PT LOTTE CHEMICAL INDONESIA	DOCU. NO. :	LINE-900-BC-4-0001
3	LOCATION :	CILEGON, INDONESIA	ITEM NO. :	**90-P-331A/B**
4	UNIT :	WP5	NO. REQUIRED :	2 (TWO)
5	SERVICE :	**OFF-SPEC ETHYLENE RETURN PUMPS**	SHEET :	1 OF 2

	FLUID			
7	LIQUID PUMPED		Off-spec Ethylene	
8	OPERATING TEMPERATURE	(℃)	-30.3	
9	VISCOSITY @ OP. TEMP.	(cP)	0.063	
10	VAPOR PRESS. @ OP. TEMP.	(kg/cm2A)	19.6	
11	SP. GR. @ OP. TEMP.	(-)	0.435	
12				
13	NORMAL CAPACITY (10 t/h)	(m3/hr)	23	
14	EXCESS RATIO	(%)	10	
15	RATED CAPACITY	(m3/hr)	25	
16	**SUCTION**			
17	PRESS. @ EQUIPMENT	(kg/cm2A) (kg/cm2G)	19.63	18.6
18	MIN. STATIC HEAD	(m)	2.5	
19	PIPE FRICTION	(kg/cm2)	0.008	
20	STRAINER	(kg/cm2)	0.07	
21		(kg/cm2)		
22		(kg/cm2)		
23				
24	NET SUC. PRESS.	(kg/cm2A) (kg/cm2G)	19.663	18.6
25	NPSH a @ Suction Nozzle Center	(m)	0.7	
26	**DISCHARGE**			
27	PRESS. @ EQUIP. or BL	(kg/cm2A) (kg/cm2G)	24.53	23.5
28	STATIC HEAD	(m)	5.0	
29	PIPE FRICTION	(kg/cm2)	0.513	
30	FE-3004	(kg/cm2)	0.2	
31	FE-3005	(kg/cm2)	0.2	
32		(kg/cm2)		
33		(kg/cm2)		
34		(kg/cm2)		
35		(kg/cm2)		
36		(kg/cm2)		
37				
38	TOTAL DISCH. PRESS.	(kg/cm2A) (kg/cm2G)	25.7	24.6
39	SUC. PRESS.	(kg/cm2A) (kg/cm2G)	19.7	18.6
40	DIFF. PRESS. (ΔP)	(kg/cm2)	6.0	
41	TOTAL HEAD (NET)	(m)	138	
42	TOTAL HEAD (TAKE)	(m)	138	
43	DIFF. PRESS. (ΔP) (TAKE)	(kg/cm2)	6.0	
44	TOTAL DISCH. PRESS. (TAKE)	(kg/cm2G)	24.6	
45				
46				
47				
48	**MAX SHUT OFF PRESSURE (NOTE 1)**			
49	MAX. SUC. STATIC HEAD	(m)	21.7	
50	SUC. EQUIP. DESIGN PRESS.	(kg/cm2G)	21.9	
51	MAX. SUC. PRESS.	(kg/cm2G)	22.8	
52	DIFF. PRESS. (ΔP) (TAKE)	(kg/cm2)	6.0	
53	SHUTOFF COEFF.	(%)	125	
54	MAX. SHUTOFF PRESS.	(kg/cm2G)	30.3	

SKETCH

CASE : OFFSPEC ETHYLENE RETURN TO NCC

1 OPERATION + 1 STANDBY, TYPE : VERTICAL CAN

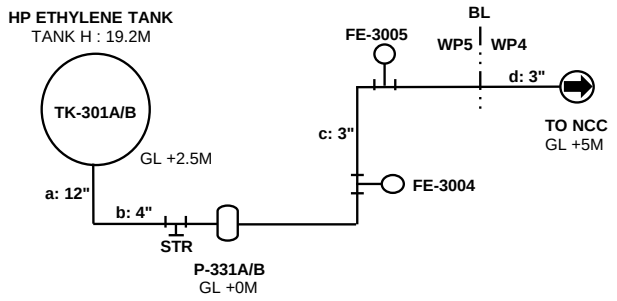

PIPE PRESSURE DROP

PIPING MATERIAL (C.S. or SUS.) : C.S. (3L1P)

		Suction		Discharge			
SECTION		**a**	**b**	**c**	**d**		
FLOW RATE	(m^3/h)	25	25	25	25		
PIPE ID	(in)	**12**	**4**	**3**	**3**		
PIPE SCH.	(in)	40	40	40	40		
PIPE ID	(mm)	303.22	102.26	77.93	77.93		
ROUGHNESS	(mm)	0.046	0.046	0.046	0.046		
VELOCITY	(m/s)	**0.097**	**0.856**	**1.473**	**1.473**		
REYNOLDS NO.	(-)	203760	604185	792814	792814		
FRICTION FACTOR	(-)	0.004	0.004	0.004	0.004		
ΔP / 100m	(kg/cm^2)	**0.000**	**0.027**	**0.111**	**0.111**		
STRAIGHT LENGTH	(m)	180	30	194	265		
NO. OF PIPE ENTRANCE							
NO. OF PIPE EXIT							
NO. OF 90 ELBOW							
NO. OF TEE							
NO. OF GLOBE VALVE							
NO. OF GATE VALVE		3		2			
NO. OF CHECK VALVE				1			
NO. OF BUTTER VALVE							
NO. OF BALL VALVE							
NO. OF CONTRACT							
NO. OF ENLARGER							
OTHER Ks							
PIPE ΔP	(kg/cm^2)	0.0002	0.0082	0.2149	0.2925		
FITTING ΔP	(kg/cm^2)	0.0000	0.0000	0.0055	0.0000		
TOTAL ΔP	(kg/cm^2)	**0.0002**	**0.0082**	**0.2204**	**0.2925**		

NOTES

1. Differential shut off pressure at max impeller size shall be lower than pump differential pressure X 1.25.
   Max suction pressure = Max suction static head + Suction equipment design pressure

PUMP HYDRAULIC CALCULATION SHEET

LOTTE E&C

REV	DATE	BY	CHK'D	APP'D
2	07-Mar-2024	J.H.JUNG	S.K.PARK	C.M.BAE
1	06-Feb-2023	J.H.JUNG	S.K.PARK	C.M.BAE
0	30-Jun-2022	J.H.JUNG	S.K.PARK	C.M.BAE
3	14-Jun-2024	J.H.JUNG	S.K.PARK	C.M.BAE

REVISION

1	PROJECT :	LINE PROJECT	JOB NO. :	15005
2	CLIENT :	PT LOTTE CHEMICAL INDONESIA	DOCU. NO. :	LINE-900-BC-4-0001
3	LOCATION :	CILEGON, INDONESIA	ITEM NO. :	**90-P-331A/B**
4	UNIT :	WP5	NO. REQUIRED :	2 (TWO)
5	SERVICE :	**OFF-SPEC ETHYLENE RETURN PUMPS**	SHEET :	2 OF 2

6	**FLUID**		
7	LIQUID PUMPED		Off-spec Ethylene
8	OPERATING TEMPERATURE	(℃)	-30.3
9	VISCOSITY @ OP. TEMP.	(cP)	0.063
10	VAPOR PRESS. @ OP. TEMP.	(kg/cm2A)	19.6
11	SP. GR. @ OP. TEMP.	(-)	0.435
12			
13	NORMAL CAPACITY (10 t/h)	(m3/hr)	23
14	EXCESS RATIO	(%)	10
15	RATED CAPACITY	(m3/hr)	25
16	**SUCTION**		
17	PRESS. @ EQUIPMENT	(kg/cm2A) (kg/cm2G)	
18	MIN. STATIC HEAD	(m)	
19	PIPE FRICTION	(kg/cm2)	
20		(kg/cm2)	
21		(kg/cm2)	
22		(kg/cm2)	
23			
24	NET SUC. PRESS.	(kg/cm2A) (kg/cm2G)	
25	NPSH a @ Suction Nozzle Center	(m)	
26	**DISCHARGE**		
27	PRESS. @ EQUIP. or BL	(kg/cm2A) (kg/cm2G)	
28	STATIC HEAD	(m)	
29	PIPE FRICTION	(kg/cm2)	
30		(kg/cm2)	
31		(kg/cm2)	
32		(kg/cm2)	
33		(kg/cm2)	
34		(kg/cm2)	
35		(kg/cm2)	
36		(kg/cm2)	
37			
38	TOTAL DISCH. PRESS.	(kg/cm2A) (kg/cm2G)	
39	SUC. PRESS.	(kg/cm2A) (kg/cm2G)	
40	DIFF. PRESS. (ΔP)	(kg/cm2)	
41	TOTAL HEAD (NET)	(m)	
42	TOTAL HEAD (TAKE)	(m)	
43	DIFF. PRESS. (ΔP) (TAKE)	(kg/cm2)	
44	TOTAL DISCH. PRESS. (TAKE)	(kg/cm2G)	
45			
46			
47			
48	**MAX SHUT OFF PRESSURE (NOTE 1)**		
49	MAX. SUC. STATIC HEAD	(m)	
50	SUC. EQUIP. DESIGN PRESS.	(kg/cm2G)	
51	MAX. SUC. PRESS.	(kg/cm2G)	
52	DIFF. PRESS. (ΔP) (TAKE)	(kg/cm2)	
53	SHUTOFF COEFF.	(%)	
54	MAX. SHUTOFF PRESS.	(kg/cm2G)	

SKETCH

PUMP MINIMUM FLOW LINE

1 OPERATION + 1 STANDBY, TYPE : VERTICAL CAN

MINIMUM FLOWRATE IS VENDOR DATA.

PUMP MINIMUM FLOWRATE =	8	m3/hr	
PUMP DISCH. P. AS PER CURVE =	26.0	kg/cm2g	(1)
SUCTION EQUIPMENT PRESS. =	18.60	kg/cm2g	(2)
SUCTION EQUIPMENT HEAD =	21.7	m	
	0.94	kg/cm2	(3)
PIPE FRICTION =	0.18	kg/cm2	(4)
FE-3004 DEL P =	0.20	kg/cm2	(5)
OTHERS DEL P =		kg/cm2	(6)
OTHERS DEL P =		kg/cm2	(7)
FV-3004 DEL P =	**6.1**	**kg/cm2**	(8)

(8) = (1) - (2) - (3) - (4) - (5) - (6) - (7)

PIPE PRESSURE DROP

PIPING MATERIAL (C.S. or SUS.) : C.S. (3L1P)

		Suction		Discharge			
SECTION				**a**			
FLOW RATE	(m^3/h)			8			
PIPE ID	(in)			2			
PIPE SCH.	(in)			40			
PIPE ID	(mm)			52.50			
ROUGHNESS	(mm)			0.046			
VELOCITY	(m/s)			**1.027**			
REYNOLDS NO.	(-)			372123			
FRICTION FACTOR	(-)			0.005			
ΔP / 100m	(kg/cm^2)			**0.088**			
STRAIGHT LENGTH	(m)			200			
NO. OF PIPE ENTRANCE							
NO. OF PIPE EXIT							
NO. OF 90 ELBOW							
NO. OF TEE							
NO. OF GLOBE VALVE							
NO. OF GATE VALVE							
NO. OF CHECK VALVE							
NO. OF BUTTER VALVE							
NO. OF BALL VALVE							
NO. OF CONTRACT							
NO. OF ENLARGER							
OTHER Ks							
PIPE ΔP	(kg/cm^2)			0.1770			
FITTING ΔP	(kg/cm^2)			0.0000			
TOTAL ΔP	(kg/cm^2)			**0.1770**			

NOTES

1. Differential shut off pressure at max impeller size shall be lower than pump differential pressure X 1.25.
   Max suction pressure = Max suction static head + Suction equipment design pressure

PUMP HYDRAULIC CALCULATION SHEET

LOTTE E&C

REV	DATE	BY	CHK'D	APP'D
2	07-Mar-2024	J.H.JUNG	S.K.PARK	C.M.BAE
1	06-Feb-2023	J.H.JUNG	S.K.PARK	C.M.BAE
0	30-Jun-2022	J.H.JUNG	S.K.PARK	C.M.BAE
3	14-Jun-2024	J.H.JUNG	S.K.PARK	C.M.BAE

REVISION

1	PROJECT :	LINE PROJECT	JOB NO. :	15005
2	CLIENT :	PT LOTTE CHEMICAL INDONESIA	DOCU. NO. :	LINE-900-BC-4-0001
3	LOCATION :	CILEGON, INDONESIA	ITEM NO. :	**90-P-332A/B**
4	UNIT :	WP5	NO. REQUIRED :	2 (TWO)
5	SERVICE :	**OFF-SPEC PROPYLENE RETURN PUMPS**	SHEET :	1 OF 4

	FLUID			
7	LIQUID PUMPED		Off-spec Propylene	
8	OPERATING TEMPERATURE	(℃)	22.7	AMB
9	VISCOSITY @ OP. TEMP.	(cP)	0.095	
10	VAPOR PRESS. @ OP. TEMP.	(kg/cm2A)	11.23	
11	SP. GR. @ OP. TEMP.	(-)	0.510	
12				
13	NORMAL CAPACITY (10 t/h)	(m3/hr)	20	
14	EXCESS RATIO	(%)	10	
15	RATED CAPACITY	(m3/hr)	22	
16	**SUCTION**			
17	PRESS. @ EQUIPMENT	(kg/cm2A) (kg/cm2G)	11.23	10.2
18	MIN. STATIC HEAD	(m)	3.0	
19	PIPE FRICTION	(kg/cm2)	0.038	
20	STRAINER	(kg/cm2)	0.07	
21		(kg/cm2)		
22		(kg/cm2)		
23				
24	NET SUC. PRESS.	(kg/cm2A) (kg/cm2G)	11.275	10.2
25	NPSH a @ Suction Nozzle Center	(m)	0.9	
26	**DISCHARGE**			
27	PRESS. @ EQUIP. or BL	(kg/cm2A) (kg/cm2G)	19.93	18.9
28	STATIC HEAD	(m)	5.0	
29	PIPE FRICTION	(kg/cm2)	0.454	
30	FE-3015	(kg/cm2)	0.2	
31	FE-3016	(kg/cm2)	0.2	
32	MARGIN	(kg/cm2)	1.0	
33		(kg/cm2)		
34		(kg/cm2)		
35		(kg/cm2)		
36		(kg/cm2)		
37				
38	TOTAL DISCH. PRESS.	(kg/cm2A) (kg/cm2G)	22.0	21.0
39	SUC. PRESS.	(kg/cm2A) (kg/cm2G)	11.3	10.2
40	DIFF. PRESS. (ΔP)	(kg/cm2)	10.8	
41	TOTAL HEAD (NET)	(m)	211	
42	TOTAL HEAD (TAKE)	(m)	211	
43	DIFF. PRESS. (ΔP) (TAKE)	(kg/cm2)	10.8	
44	TOTAL DISCH. PRESS. (TAKE)	(kg/cm2G)	21.0	
45				
46				
47				
48	**MAX SHUT OFF PRESSURE (NOTE 1)**			
49	MAX. SUC. STATIC HEAD	(m)	22.2	
50	SUC. EQUIP. DESIGN PRESS.	(kg/cm2G)	20.3	
51	MAX. SUC. PRESS.	(kg/cm2G)	21.4	
52	DIFF. PRESS. (ΔP) (TAKE)	(kg/cm2)	10.8	
53	SHUTOFF COEFF.	(%)	125	
54	MAX. SHUTOFF PRESS.	(kg/cm2G)	34.9	

SKETCH

CASE 1 : OFFSPEC PROPYLENE RETURN TO NCC (GOVERNING)

1 OPERATION + 1 STANDBY, TYPE : VERTICAL CAN

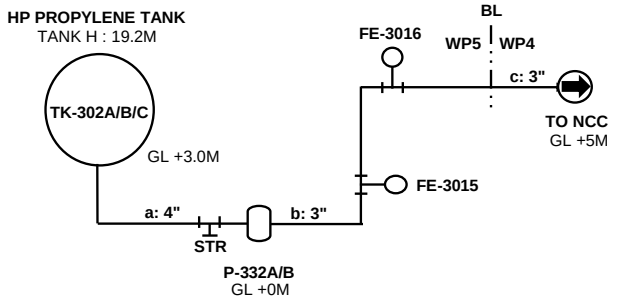

PIPE PRESSURE DROP

PIPING MATERIAL (C.S. or SUS.) : C.S. (3L1P)

		Suction		Discharge			
SECTION		**a**		**b**	**c**		
FLOW RATE	(m^3/h)	22		22	22		
PIPE ID	(in)	4		3	3		
PIPE SCH.	(in)	40		40	40		
PIPE ID	(mm)	102.26		77.93	77.93		
ROUGHNESS	(mm)	0.046		0.046	0.046		
VELOCITY	(m/s)	**0.744**		**1.281**	**1.281**		
REYNOLDS NO.	(-)	408479		536008	536008		
FRICTION FACTOR	(-)	0.004		0.005	0.005		
ΔP / 100m	(kg/cm^2)	**0.025**		**0.099**	**0.099**		
STRAIGHT LENGTH	(m)	151		222	231		
NO. OF PIPE ENTRANCE							
NO. OF PIPE EXIT							
NO. OF 90 ELBOW							
NO. OF TEE							
NO. OF GLOBE VALVE							
NO. OF GATE VALVE		5		1			
NO. OF CHECK VALVE				1			
NO. OF BUTTER VALVE							
NO. OF BALL VALVE							
NO. OF CONTRACT							
NO. OF ENLARGER							
OTHER Ks							
PIPE ΔP	(kg/cm^2)	0.0372		0.2206	0.2295		
FITTING ΔP	(kg/cm^2)	0.0010		0.0043	0.0000		
TOTAL ΔP	(kg/cm^2)	**0.0382**		**0.2249**	**0.2295**		

NOTES

1. Differential shut off pressure at max impeller size shall be lower than pump differential pressure X 1.25.
   Max suction pressure = Max suction static head + Suction equipment design pressure

: SELECTED DATA FOR PUMP DATASHEET

PUMP HYDRAULIC CALCULATION SHEET

LOTTE E&C

REV	DATE	BY	CHK'D	APP'D
2	07-Mar-2024	J.H.JUNG	S.K.PARK	C.M.BAE
1	06-Feb-2023	J.H.JUNG	S.K.PARK	C.M.BAE
0	30-Jun-2022	J.H.JUNG	S.K.PARK	C.M.BAE
3	14-Jun-2024	J.H.JUNG	S.K.PARK	C.M.BAE

REVISION

1	PROJECT :	LINE PROJECT	JOB NO. :	15005
2	CLIENT :	PT LOTTE CHEMICAL INDONESIA	DOCU. NO. :	LINE-900-BC-4-0001
3	LOCATION :	CILEGON, INDONESIA	ITEM NO. :	**90-P-332A/B**
4	UNIT :	WP5	NO. REQUIRED :	2 (TWO)
5	SERVICE :	**OFF-SPEC PROPYLENE RETURN PUMPS**	SHEET :	2 OF 4

6	**FLUID**			
7	LIQUID PUMPED	**(NOTE 2)**		Off-spec Mixed C4
8	OPERATING TEMPERATURE		(℃)	22.7 AMB
9	VISCOSITY @ OP. TEMP.		(cP)	0.156
10	VAPOR PRESS. @ OP. TEMP.		(kg/cm2A)	2.63
11	SP. GR. @ OP. TEMP.		(-)	0.604
12				
13	NORMAL CAPACITY	(12 t/h)	(m3/hr)	20
14	EXCESS RATIO		(%)	10
15	RATED CAPACITY		(m3/hr)	22
16	**SUCTION**			
17	PRESS. @ EQUIPMENT	(kg/cm2A)	(kg/cm2G)	2.63 1.6
18	MIN. STATIC HEAD		(m)	2.5
19	PIPE FRICTION		(kg/cm2)	0.024
20	STRAINER		(kg/cm2)	0.07
21			(kg/cm2)	
22			(kg/cm2)	
23				
24	NET SUC. PRESS.	(kg/cm2A)	(kg/cm2G)	2.687 1.7
25	NPSH a @ Suction Nozzle Center		(m)	0.9
26	**DISCHARGE**			
27	PRESS. @ EQUIP. or BL	(kg/cm2A)	(kg/cm2G)	12.03 11.0
28	STATIC HEAD		(m)	5.0
29	PIPE FRICTION		(kg/cm2)	0.546
30	FE-3015		(kg/cm2)	0.2
31	FE-3016		(kg/cm2)	0.2
32			(kg/cm2)	
33			(kg/cm2)	
34			(kg/cm2)	
35			(kg/cm2)	
36			(kg/cm2)	
37				
38	TOTAL DISCH. PRESS.	(kg/cm2A)	(kg/cm2G)	13.3 12.2
39	SUC. PRESS.	(kg/cm2A)	(kg/cm2G)	2.7 1.7
40	DIFF. PRESS. (ΔP)		(kg/cm2)	10.6
41	TOTAL HEAD (NET)		(m)	175
42	TOTAL HEAD (TAKE)		(m)	
43	DIFF. PRESS. (ΔP) (TAKE)		(kg/cm2)	
44	TOTAL DISCH. PRESS. (TAKE)		(kg/cm2G)	
45				
46				
47				
48	**MAX SHUT OFF PRESSURE (NOTE 1)**			
49	MAX. SUC. STATIC HEAD		(m)	
50	SUC. EQUIP. DESIGN PRESS.		(kg/cm2G)	
51	MAX. SUC. PRESS.		(kg/cm2G)	
52	DIFF. PRESS. (ΔP) (TAKE)		(kg/cm2)	
53	SHUTOFF COEFF.		(%)	
54	MAX. SHUTOFF PRESS.		(kg/cm2G)	

SKETCH

CASE 2 : OFFSPEC MIXED C4 RETURN TO NCC

1 OPERATION + 1 STANDBY, TYPE : VERTICAL CAN

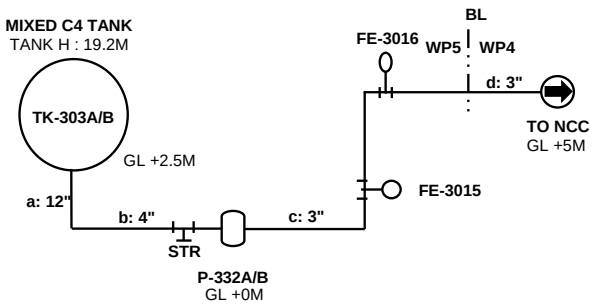

PIPE PRESSURE DROP

PIPING MATERIAL (C.S. or SUS.) : C.S. (3C1P / 3L1P)

		Suction		Discharge			
SECTION		**a**	**b**	**c**	**d**		
FLOW RATE	(m^3/h)	22	22	22	22		
PIPE ID	(in)	**12**	**4**	**3**	**3**		
PIPE SCH.	(in)	STD	40	40	40		
PIPE ID	(mm)	304.80	102.26	77.93	77.93		
ROUGHNESS	(mm)	0.046	0.046	0.046	0.046		
VELOCITY	(m/s)	**0.084**	**0.744**	**1.281**	**1.281**		
REYNOLDS NO.	(-)	98839	294602	386578	386578		
FRICTION FACTOR	(-)	0.005	0.004	0.005	0.005		
ΔP / 100m	(kg/cm^2)	**0.000**	**0.030**	**0.120**	**0.120**		
STRAIGHT LENGTH	(m)	107	73	222	231		
NO. OF PIPE ENTRANCE							
NO. OF PIPE EXIT							
NO. OF 90 ELBOW							
NO. OF TEE							
NO. OF GLOBE VALVE							
NO. OF GATE VALVE		2	3	1			
NO. OF CHECK VALVE			1	1			
NO. OF BUTTER VALVE							
NO. OF BALL VALVE							
NO. OF CONTRACT							
NO. OF ENLARGER							
OTHER Ks							
PIPE ΔP	(kg/cm^2)	0.0001	0.0219	0.2653	0.2761		
FITTING ΔP	(kg/cm^2)	0.0000	0.0021	0.0051	0.0000		
TOTAL ΔP	(kg/cm^2)	**0.0001**	**0.0240**	**0.2704**	**0.2761**		

NOTES

1. Differential shut off pressure at max impeller size shall be lower than pump differential pressure X 1.25.
   Max suction pressure = Max suction static head + Suction equipment design pressure
2. Offspec Mixed C4 is returned to NCC via 90-P-332A/B Off-spec Propylene Return Pumps.

PUMP HYDRAULIC CALCULATION SHEET

LOTTE E&C

REV	DATE	BY	CHK'D	APP'D
2	07-Mar-2024	J.H.JUNG	S.K.PARK	C.M.BAE
1	06-Feb-2023	J.H.JUNG	S.K.PARK	C.M.BAE
0	30-Jun-2022	J.H.JUNG	S.K.PARK	C.M.BAE
3	14-Jun-2024	J.H.JUNG	S.K.PARK	C.M.BAE

REVISION

1	PROJECT :	LINE PROJECT	JOB NO. :	15005
2	CLIENT :	PT LOTTE CHEMICAL INDONESIA	DOCU. NO. :	LINE-900-BC-4-0001
3	LOCATION :	CILEGON, INDONESIA	ITEM NO. :	**90-P-332A/B**
4	UNIT :	WP5	NO. REQUIRED :	2 (TWO)
5	SERVICE :	**OFF-SPEC PROPYLENE RETURN PUMPS**	SHEET :	3 OF 4

	FLUID		
7	LIQUID PUMPED		Off-spec Propylene
8	OPERATING TEMPERATURE	(℃)	22.7 AMB
9	VISCOSITY @ OP. TEMP.	(cP)	0.095
10	VAPOR PRESS. @ OP. TEMP.	(kg/cm2A)	11.23
11	SP. GR. @ OP. TEMP.	(-)	0.510
12			
13	NORMAL CAPACITY (10 t/h)	(m3/hr)	20
14	EXCESS RATIO	(%)	10
15	RATED CAPACITY	(m3/hr)	22
16	**SUCTION**		
17	PRESS. @ EQUIPMENT	(kg/cm2A) (kg/cm2G)	
18	MIN. STATIC HEAD	(m)	
19	PIPE FRICTION	(kg/cm2)	
20		(kg/cm2)	
21		(kg/cm2)	
22		(kg/cm2)	
23			
24	NET SUC. PRESS.	(kg/cm2A) (kg/cm2G)	
25	NPSH a @ Suction Nozzle Center	(m)	
26	**DISCHARGE**		
27	PRESS. @ EQUIP. or BL	(kg/cm2A) (kg/cm2G)	
28	STATIC HEAD	(m)	
29	PIPE FRICTION	(kg/cm2)	
30		(kg/cm2)	
31		(kg/cm2)	
32		(kg/cm2)	
33		(kg/cm2)	
34		(kg/cm2)	
35		(kg/cm2)	
36		(kg/cm2)	
37			
38	TOTAL DISCH. PRESS.	(kg/cm2A) (kg/cm2G)	
39	SUC. PRESS.	(kg/cm2A) (kg/cm2G)	
40	DIFF. PRESS. (ΔP)	(kg/cm2)	
41	TOTAL HEAD (NET)	(m)	
42	TOTAL HEAD (TAKE)	(m)	
43	DIFF. PRESS. (ΔP) (TAKE)	(kg/cm2)	
44	TOTAL DISCH. PRESS. (TAKE)	(kg/cm2G)	
45			
46			
47			
48	**MAX SHUT OFF PRESSURE (NOTE 1)**		
49	MAX. SUC. STATIC HEAD	(m)	
50	SUC. EQUIP. DESIGN PRESS.	(kg/cm2G)	
51	MAX. SUC. PRESS.	(kg/cm2G)	
52	DIFF. PRESS. (ΔP) (TAKE)	(kg/cm2)	
53	SHUTOFF COEFF.	(%)	
54	MAX. SHUTOFF PRESS.	(kg/cm2G)	

SKETCH

PUMP MINIMUM FLOW LINE **(PROPYLENE CASE)**

1 OPERATION + 1 STANDBY, TYPE : VERTICAL CAN

MINIMUM FLOWRATE IS VENDOR DATA.

PUMP MINIMUM FLOWRATE =	8	m3/hr	
PUMP DISCH. P. AS PER CURVE =	22.5	kg/cm2g	(1)
SUCTION EQUIPMENT PRESS. =	10.20	kg/cm2g	(2)
SUCTION EQUIPMENT HEAD =	22.2	m	
	1.13	kg/cm2	(3)
PIPE FRICTION =	0.29	kg/cm2	(4)
FE-3015 DEL P =	0.20	kg/cm2	(5)
OTHERS DEL P =		kg/cm2	(6)
OTHERS DEL P =		kg/cm2	(7)
FV-3015 DEL P =	**10.7**	**kg/cm2**	(8)

(8) = (1) - (2) - (3) - (4) - (5) - (6) - (7)

PIPE PRESSURE DROP

PIPING MATERIAL (C.S. or SUS.) : C.S. (3L1P)

		Suction		Discharge			
SECTION				**a**			
FLOW RATE	(m^3/h)			8			
PIPE ID	(in)			2			
PIPE SCH.	(in)			80			
PIPE ID	(mm)			49.25			
ROUGHNESS	(mm)			0.046			
VELOCITY	(m/s)			**1.166**			
REYNOLDS NO.	(-)			308416			
FRICTION FACTOR	(-)			0.005			
ΔP / 100m	(kg/cm^2)			**0.146**			
STRAIGHT LENGTH	(m)			200			
NO. OF PIPE ENTRANCE							
NO. OF PIPE EXIT							
NO. OF 90 ELBOW							
NO. OF TEE							
NO. OF GLOBE VALVE							
NO. OF GATE VALVE							
NO. OF CHECK VALVE							
NO. OF BUTTER VALVE							
NO. OF BALL VALVE							
NO. OF CONTRACT							
NO. OF ENLARGER							
OTHER Ks							
PIPE ΔP	(kg/cm^2)			0.2916			
FITTING ΔP	(kg/cm^2)			0.0000			
TOTAL ΔP	(kg/cm^2)			**0.2916**			

NOTES

1. Differential shut off pressure at max impeller size shall be lower than pump differential pressure X 1.25.
   Max suction pressure = Max suction static head + Suction equipment design pressure

PUMP HYDRAULIC CALCULATION SHEET

LOTTE E&C

REV	DATE	BY	CHK'D	APP'D
2	07-Mar-2024	J.H.JUNG	S.K.PARK	C.M.BAE
1	06-Feb-2023	J.H.JUNG	S.K.PARK	C.M.BAE
0	30-Jun-2022	J.H.JUNG	S.K.PARK	C.M.BAE
3	14-Jun-2024	J.H.JUNG	S.K.PARK	C.M.BAE

REVISION

1	PROJECT :	LINE PROJECT	JOB NO. :	15005
2	CLIENT :	PT LOTTE CHEMICAL INDONESIA	DOCU. NO. :	LINE-900-BC-4-0001
3	LOCATION :	CILEGON, INDONESIA	ITEM NO. :	**90-P-332A/B**
4	UNIT :	WP5	NO. REQUIRED :	2 (TWO)
5	SERVICE :	**OFF-SPEC PROPYLENE RETURN PUMPS**	SHEET :	4 OF 4

	FLUID		
7	LIQUID PUMPED		Off-spec Mixed C4
8	OPERATING TEMPERATURE	(℃)	22.7 AMB
9	VISCOSITY @ OP. TEMP.	(cP)	0.156
10	VAPOR PRESS. @ OP. TEMP.	(kg/cm2A)	2.63
11	SP. GR. @ OP. TEMP.	(-)	0.604
12			
13	NORMAL CAPACITY (11 t/h)	(m3/hr)	18
14	EXCESS RATIO	(%)	10
15	RATED CAPACITY	(m3/hr)	20
16	**SUCTION**		
17	PRESS. @ EQUIPMENT	(kg/cm2A) (kg/cm2G)	
18	MIN. STATIC HEAD	(m)	
19	PIPE FRICTION	(kg/cm2)	
20		(kg/cm2)	
21		(kg/cm2)	
22		(kg/cm2)	
23			
24	NET SUC. PRESS.	(kg/cm2A) (kg/cm2G)	
25	NPSH a @ Suction Nozzle Center	(m)	
26	**DISCHARGE**		
27	PRESS. @ EQUIP. or BL	(kg/cm2A) (kg/cm2G)	
28	STATIC HEAD	(m)	
29	PIPE FRICTION	(kg/cm2)	
30		(kg/cm2)	
31		(kg/cm2)	
32		(kg/cm2)	
33		(kg/cm2)	
34		(kg/cm2)	
35		(kg/cm2)	
36		(kg/cm2)	
37			
38	TOTAL DISCH. PRESS.	(kg/cm2A) (kg/cm2G)	
39	SUC. PRESS.	(kg/cm2A) (kg/cm2G)	
40	DIFF. PRESS. (ΔP)	(kg/cm2)	
41	TOTAL HEAD (NET)	(m)	
42	TOTAL HEAD (TAKE)	(m)	
43	DIFF. PRESS. (ΔP) (TAKE)	(kg/cm2)	
44	TOTAL DISCH. PRESS. (TAKE)	(kg/cm2G)	
45			
46			
47			
48	**MAX SHUT OFF PRESSURE (NOTE 1)**		
49	MAX. SUC. STATIC HEAD	(m)	
50	SUC. EQUIP. DESIGN PRESS.	(kg/cm2G)	
51	MAX. SUC. PRESS.	(kg/cm2G)	
52	DIFF. PRESS. (ΔP) (TAKE)	(kg/cm2)	
53	SHUTOFF COEFF.	(%)	
54	MAX. SHUTOFF PRESS.	(kg/cm2G)	

SKETCH

PUMP MINIMUM FLOW LINE **(MIXED C4 CASE)**

1 OPERATION + 1 STANDBY, TYPE : VERTICAL CAN

MINIMUM FLOWRATE IS VENDOR DATA.

PUMP MINIMUM FLOWRATE =	8	m3/hr	
PUMP DISCH. P. AS PER CURVE =	16.1	kg/cm2g	(1)
SUCTION EQUIPMENT PRESS. =	1.60	kg/cm2g	(2)
SUCTION EQUIPMENT HEAD =	21.7	m	
	1.31	kg/cm2	(3)
PIPE FRICTION =	0.35	kg/cm2	(4)
FE-3015 DEL P =	0.20	kg/cm2	(5)
OTHERS DEL P =		kg/cm2	(6)
OTHERS DEL P =		kg/cm2	(7)
FV-3015 DEL P =	**12.7**	**kg/cm2**	(8)

(8) = (1) - (2) - (3) - (4) - (5) - (6) - (7)

PIPE PRESSURE DROP

PIPING MATERIAL (C.S. or SUS.) : C.S. (3L1P)

		Suction		Discharge			
SECTION				**a**			
FLOW RATE	(m^3/h)			8			
PIPE ID	(in)			2			
PIPE SCH.	(in)			80			
PIPE ID	(mm)			49.25			
ROUGHNESS	(mm)			0.046			
VELOCITY	(m/s)			**1.166**			
REYNOLDS NO.	(-)			222435			
FRICTION FACTOR	(-)			0.005			
ΔP / 100m	(kg/cm^2)			**0.176**			
STRAIGHT LENGTH	(m)			200			
NO. OF PIPE ENTRANCE							
NO. OF PIPE EXIT							
NO. OF 90 ELBOW							
NO. OF TEE							
NO. OF GLOBE VALVE							
NO. OF GATE VALVE							
NO. OF CHECK VALVE							
NO. OF BUTTER VALVE							
NO. OF BALL VALVE							
NO. OF CONTRACT							
NO. OF ENLARGER							
OTHER Ks							
PIPE ΔP	(kg/cm^2)			0.3511			
FITTING ΔP	(kg/cm^2)			0.0000			
TOTAL ΔP	(kg/cm^2)			**0.3511**			

NOTES

1. Differential shut off pressure at max impeller size shall be lower than pump differential pressure X 1.25.
   Max suction pressure = Max suction static head + Suction equipment design pressure

PUMP HYDRAULIC CALCULATION SHEET

LOTTE E&C

REV	DATE	BY	CHK'D	APP'D
2	07-Mar-2024	J.H.JUNG	S.K.PARK	C.M.BAE
1	06-Feb-2023	J.H.JUNG	S.K.PARK	C.M.BAE
0	30-Jun-2022	J.H.JUNG	S.K.PARK	C.M.BAE
3	14-Jun-2024	J.H.JUNG	S.K.PARK	C.M.BAE

REVISION

1	PROJECT :	LINE PROJECT	JOB NO. :	15005
2	CLIENT :	PT LOTTE CHEMICAL INDONESIA	DOCU. NO. :	LINE-900-BC-4-0001
3	LOCATION :	CILEGON, INDONESIA	ITEM NO. :	**90-P-341AB**
4	UNIT :	WP5	NO. REQUIRED :	2 (TWO)
5	SERVICE :	**HP ETHYLENE HEATER CONDENSATE PUMPS**	SHEET :	1 OF 2

6	**FLUID**			
7	LIQUID PUMPED		Steam Condensate	
8	OPERATING TEMPERATURE	(℃)	140	
9	VISCOSITY @ OP. TEMP.	(cP)	0.2	
10	VAPOR PRESS. @ OP. TEMP.	(kg/cm2A)	3.7	
11	SP. GR. @ OP. TEMP.	(-)	0.926	
12				
13	NORMAL CAPACITY	(m3/hr)	5	
14	EXCESS RATIO	(%)	10	
15	RATED CAPACITY	(m3/hr)	6	
16	**SUCTION**			
17	PRESS. @ EQUIPMENT	(kg/cm2A) (kg/cm2G)	3.70	2.7
18	MIN. STATIC HEAD	(m)	3.5	
19	PIPE FRICTION	(kg/cm2)	0.007	
20	STRAINER	(kg/cm2)	0.07	
21		(kg/cm2)		
22		(kg/cm2)		
23				
24	NET SUC. PRESS.	(kg/cm2A) (kg/cm2G)	3.947	2.9
25	NPSH a @ Suction Nozzle Center	(m)	2.7	
26	**DISCHARGE**			
27	PRESS. @ EQUIP. or BL	(kg/cm2A) (kg/cm2G)	4.81	3.8
28	STATIC HEAD	(m)	4.7	
29	PIPE FRICTION	(kg/cm2)	0.029	
30	FE-3008	(kg/cm2)	0.20	
31	LV-3003	(kg/cm2)	1.43	
32		(kg/cm2)		
33		(kg/cm2)		
34		(kg/cm2)		
35		(kg/cm2)		
36		(kg/cm2)		
37				
38	TOTAL DISCH. PRESS.	(kg/cm2A) (kg/cm2G)	6.9	5.9
39	SUC. PRESS.	(kg/cm2A) (kg/cm2G)	3.9	2.9
40	DIFF. PRESS. (ΔP)	(kg/cm2)	3.0	
41	TOTAL HEAD (NET)	(m)	32	
42	TOTAL HEAD (TAKE)	(m)	32	
43	DIFF. PRESS. (ΔP) (TAKE)	(kg/cm2)	3.0	
44	TOTAL DISCH. PRESS. (TAKE)	(kg/cm2G)	5.9	
45				
46				
47				
48	**MAX SHUT OFF PRESSURE (NOTE 1)**			
49	MAX. SUC. STATIC HEAD	(m)	6.0	(NOTE 2)
50	SUC. EQUIP. DESIGN PRESS.	(kg/cm2G)	6.0	
51	MAX. SUC. PRESS.	(kg/cm2G)	6.6	
52	DIFF. PRESS. (ΔP) (TAKE)	(kg/cm2)	3.0	
53	SHUTOFF COEFF.	(%)	125	
54	MAX. SHUTOFF PRESS.	(kg/cm2G)	10.3	

SKETCH

CASE : CONDENSATE TRANSFER TO HEADER

1 OPERATION + 1 STANDBY, TYPE : HORIZONTAL CENTRIFUGAL

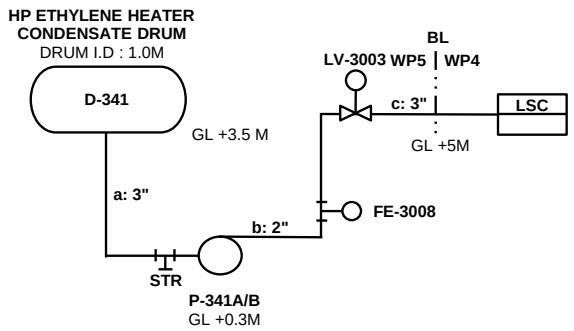

PIPE PRESSURE DROP

PIPING MATERIAL (C.S. or SUS.) : C.S. (1C1W)

		Suction		Discharge			
SECTION		**a**		**b**	**c**		
FLOW RATE	(m^3/h)	6		6	6		
PIPE ID	(in)	3		2	3		
PIPE SCH.	(in)	40		40	40		
PIPE ID	(mm)	77.93		52.50	77.93		
ROUGHNESS	(mm)	0.046		0.046	0.046		
VELOCITY	(m/s)	**0.320**		**0.706**	**0.320**		
REYNOLDS NO.	(-)	115570		171550	115570		
FRICTION FACTOR	(-)	0.005		0.005	0.005		
ΔP / 100m	(kg/cm^2)	**0.013**		**0.093**	**0.013**		
STRAIGHT LENGTH	(m)	50		20	60		
NO. OF PIPE ENTRANCE							
NO. OF PIPE EXIT							
NO. OF 90 ELBOW		5					
NO. OF TEE							
NO. OF GLOBE VALVE							
NO. OF GATE VALVE		3		3			
NO. OF CHECK VALVE				1			
NO. OF BUTTER VALVE							
NO. OF BALL VALVE							
NO. OF CONTRACT							
NO. OF ENLARGER							
OTHER Ks							
PIPE ΔP	(kg/cm^2)	0.0063		0.0186	0.0076		
FITTING ΔP	(kg/cm^2)	0.0009		0.0033	0.0000		
TOTAL ΔP	(kg/cm^2)	**0.0073**		**0.0219**	**0.0076**		

NOTES

1. Differential shut off pressure at max impeller size shall be lower than pump differential pressure X 1.25.
   Max suction pressure = Max suction static head + Suction equipment design pressure
2. Max suction static head is assumed as 6.0m for max shut off pressure.

: SELECTED DATA FOR PUMP DATASHEET

PUMP HYDRAULIC CALCULATION SHEET

LOTTE E&C

REV	DATE	BY	CHK'D	APP'D
2	07-Mar-2024	J.H.JUNG	S.K.PARK	C.M.BAE
1	06-Feb-2023	J.H.JUNG	S.K.PARK	C.M.BAE
0	30-Jun-2022	J.H.JUNG	S.K.PARK	C.M.BAE
3	14-Jun-2024	J.H.JUNG	S.K.PARK	C.M.BAE

REVISION

PROJECT	:	LINE PROJECT	JOB NO.	: 15005
CLIENT	:	PT LOTTE CHEMICAL INDONESIA	DOCU. NO.	: LINE-900-BC-4-0001
LOCATION	:	CILEGON, INDONESIA	ITEM NO.	: **90-P-341AB**
UNIT	:	WP5	NO. REQUIRED	: 2 (TWO)
SERVICE	:	**HP ETHYLENE HEATER CONDENSATE PUMPS**	SHEET	: 2 OF 2

FLUID

LIQUID PUMPED		Steam Condensate
OPERATING TEMPERATURE	(℃)	140
VISCOSITY @ OP. TEMP.	(cP)	0.2
VAPOR PRESS. @ OP. TEMP.	(kg/cm2A)	3.7
SP. GR. @ OP. TEMP.	(-)	0.926
NORMAL CAPACITY	(m3/hr)	5
EXCESS RATIO	(%)	10
RATED CAPACITY	(m3/hr)	6

SUCTION

PRESS. @ EQUIPMENT	(kg/cm2A) (kg/cm2G)	
MIN. STATIC HEAD	(m)	
PIPE FRICTION	(kg/cm2)	
	(kg/cm2)	
	(kg/cm2)	
	(kg/cm2)	
NET SUC. PRESS.	(kg/cm2A) (kg/cm2G)	
NPSH a @ Suction Nozzle Center	(m)	

DISCHARGE

PRESS. @ EQUIP. or BL	(kg/cm2A) (kg/cm2G)	
STATIC HEAD	(m)	
PIPE FRICTION	(kg/cm2)	
	(kg/cm2)	
	(kg/cm2)	
	(kg/cm2)	
	(kg/cm2)	
	(kg/cm2)	
	(kg/cm2)	
TOTAL DISCH. PRESS.	(kg/cm2A) (kg/cm2G)	
SUC. PRESS.	(kg/cm2A) (kg/cm2G)	
DIFF. PRESS. (ΔP)	(kg/cm2)	
TOTAL HEAD (NET)	(m)	
TOTAL HEAD (TAKE)	(m)	
DIFF. PRESS. (ΔP) (TAKE)	(kg/cm2)	
TOTAL DISCH. PRESS. (TAKE)	(kg/cm2G)	

MAX SHUT OFF PRESSURE (NOTE 1)

MAX. SUC. STATIC HEAD	(m)	
SUC. EQUIP. DESIGN PRESS.	(kg/cm2G)	
MAX. SUC. PRESS.	(kg/cm2G)	
DIFF. PRESS. (ΔP) (TAKE)	(kg/cm2)	
SHUTOFF COEFF.	(%)	
MAX. SHUTOFF PRESS.	(kg/cm2G)	

SKETCH

PUMP MINIMUM FLOW LINE

1 OPERATION + 1 STANDBY, TYPE : HORIZONTAL CENTRIFUGAL

MINIMUM FLOWRATE IS VENDOR DATA.

PUMP MINIMUM FLOWRATE =	1.9	m3/hr	
PUMP DISCH. P. AS PER CURVE =	6.0	kg/cm2g	(1)
SUCTION EQUIPMENT PRESS. =	2.67	kg/cm2g	(2)
SUCTION EQUIPMENT HEAD =	5.3	m	
	0.49	kg/cm2	(3)
PIPE FRICTION =	0.03	kg/cm2	(4)
FE-3008 DEL P =	0.20	kg/cm2	(5)
OTHERS DEL P =		kg/cm2	(6)
OTHERS DEL P =		kg/cm2	(7)
FV-3008 DEL P =	**2.6**	**kg/cm2**	(8)

(8) = (1) - (2) - (3) - (4) - (5) - (6) - (7)

PIPE PRESSURE DROP

PIPING MATERIAL (C.S. or SUS.) : C.S. (1C1W)

		Suction		Discharge			
SECTION				**a**			
FLOW RATE	(m^3/h)			1.9			
PIPE ID	(in)			2			
PIPE SCH.	(in)			80			
PIPE ID	(mm)			49.25			
ROUGHNESS	(mm)			0.046			
VELOCITY	(m/s)			**0.274**			
REYNOLDS NO.	(-)			62509			
FRICTION FACTOR	(-)			0.006			
ΔP / 100m	(kg/cm^2)			**0.017**			
STRAIGHT LENGTH	(m)			200			
NO. OF PIPE ENTRANCE							
NO. OF PIPE EXIT							
NO. OF 90 ELBOW							
NO. OF TEE							
NO. OF GLOBE VALVE							
NO. OF GATE VALVE							
NO. OF CHECK VALVE							
NO. OF BUTTER VALVE							
NO. OF BALL VALVE							
NO. OF CONTRACT							
NO. OF ENLARGER							
OTHER Ks							
PIPE ΔP	(kg/cm^2)			0.0333			
FITTING ΔP	(kg/cm^2)			0.0000			
TOTAL ΔP	(kg/cm^2)			**0.0333**			

NOTES

1. Differential shut off pressure at max impeller size shall be lower than pump differential pressure X 1.25.
   Max suction pressure = Max suction static head + Suction equipment design pressure

PUMP HYDRAULIC CALCULATION SHEET

LOTTE E&C

REV	DATE	BY	CHK'D	APP'D
2	07-Mar-2024	J.H.JUNG	S.K.PARK	C.M.BAE
1	06-Feb-2023	J.H.JUNG	S.K.PARK	C.M.BAE
0	30-Jun-2022	J.H.JUNG	S.K.PARK	C.M.BAE
3	14-Jun-2024	J.H.JUNG	S.K.PARK	C.M.BAE

REVISION

1	PROJECT :	LINE PROJECT	JOB NO. :	15005
2	CLIENT :	PT LOTTE CHEMICAL INDONESIA	DOCU. NO. :	LINE-900-BC-4-0001
3	LOCATION :	CILEGON, INDONESIA	ITEM NO. :	**90-P-344A/B**
4	UNIT :	WP5	NO. REQUIRED :	2 (TWO)
5	SERVICE :	**BUTADIENE CIRCULATION PUMPS**	SHEET :	1 OF 3

6	**FLUID**			
7	LIQUID PUMPED		Butadiene	
8	OPERATING TEMPERATURE	(℃)	5.0	
9	VISCOSITY @ OP. TEMP.	(cP)	0.168	
10	VAPOR PRESS. @ OP. TEMP.	(kg/cm2A)	1.47	
11	SP. GR. @ OP. TEMP.	(-)	0.640	
12				
13	NORMAL CAPACITY (58 t/h)	(m3/hr)	91	
14	EXCESS RATIO	(%)	10	
15	RATED CAPACITY	(m3/hr)	100	
16	**SUCTION**			
17	PRESS. @ EQUIPMENT	(kg/cm2A) (kg/cm2G)	1.47	0.44
18	MIN. STATIC HEAD	(m)	3.5	(NOTE 4)
19	PIPE FRICTION	(kg/cm2)	0.093	
20	STRAINER	(kg/cm2)	0.07	
21		(kg/cm2)		
22		(kg/cm2)		
23				
24	NET SUC. PRESS.	(kg/cm2A) (kg/cm2G)	1.531	0.5
25	NPSH a @ Suction Nozzle Center	(m)	1.0	
26	**DISCHARGE**			
27	PRESS. @ EQUIP. or BL	(kg/cm2A) (kg/cm2G)	1.97	0.94
28	STATIC HEAD	(m)	21.7	
29	PIPE FRICTION	(kg/cm2)	2.605	
30	FE-3024	(kg/cm2)	0.24	
31	FE-3027	(kg/cm2)	0.48	
32	FE-6007	(kg/cm2)	0.35	
33	FE-3025	(kg/cm2)	0.2	
34	FV-3025	(kg/cm2)	3.0	
35	E-304 (BD COOLER)	(kg/cm2)	0.7	
36	-	(kg/cm2)	-	
37				
38	TOTAL DISCH. PRESS.	(kg/cm2A) (kg/cm2G)	10.9	9.9
39	SUC. PRESS.	(kg/cm2A) (kg/cm2G)	1.5	0.5
40	DIFF. PRESS. (ΔP)	(kg/cm2)	9.4	
41	TOTAL HEAD (NET)	(m)	147	
42	TOTAL HEAD (TAKE)	(m)	147	
43	DIFF. PRESS. (ΔP) (TAKE)	(kg/cm2)	9.4	
44	TOTAL DISCH. PRESS. (TAKE)	(kg/cm2G)	9.9	
45				
46				
47				
48	**MAX SHUT OFF PRESSURE (NOTE 1)**			
49	MAX. SUC. STATIC HEAD	(m)	21.7	
50	SUC. EQUIP. DESIGN PRESS.	(kg/cm2G)	6.0	
51	MAX. SUC. PRESS.	(kg/cm2G)	7.4	
52	DIFF. PRESS. (ΔP) (TAKE)	(kg/cm2)	9.4	
53	SHUTOFF COEFF.	(%)	125	
54	MAX. SHUTOFF PRESS.	(kg/cm2G)	19.1	

SKETCH

CASE 1 : COLD CIRCULATION FOR NEW JETTY (GOVERNING)

1 OPERATION + 1 STANDBY, TYPE : VERTICAL CAN

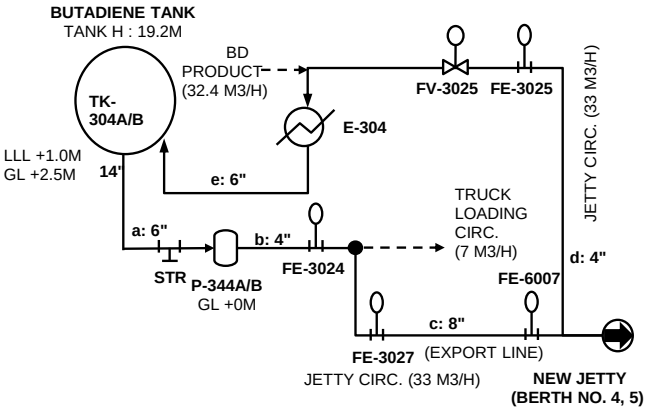

PIPE PRESSURE DROP

PIPING MATERIAL (C.S. or SUS.) : C.S. (3C1P)

		Suction		Discharge			
SECTION		**a**		**b**	**c**	**d**	**e**
FLOW RATE	(m^3/h)	100		100	33	33	100
PIPE ID	(in)	**6**		**4**	**8**	**4**	**6**
PIPE SCH.	(in)	40		40	40	40	40
PIPE ID	(mm)	154.05		102.26	202.72	102.26	154.05
ROUGHNESS	(mm)	0.046		0.046	0.046	0.046	0.046
VELOCITY	(m/s)	**1.492**		**3.386**	**0.284**	**1.116**	**1.492**
REYNOLDS NO.	(-)	875487		1318881	219328	434796	874803
FRICTION FACTOR	(-)	0.004		0.004	0.004	0.004	0.004
ΔP / 100m	(kg/cm^2)	**0.074**		**0.612**	**0.002**	**0.069**	**0.074**
STRAIGHT LENGTH	(m)	120		78	2682	2664	171
NO. OF PIPE ENTRANCE							
NO. OF PIPE EXIT							
NO. OF 90 ELBOW							
NO. OF TEE							
NO. OF GLOBE VALVE							
NO. OF GATE VALVE		4		3	1	3	5
NO. OF CHECK VALVE				2		1	1
NO. OF BUTTER VALVE							
NO. OF BALL VALVE							
NO. OF CONTRACT							
NO. OF ENLARGER							
OTHER Ks							
PIPE ΔP	(kg/cm^2)	0.0890		0.4771	0.0595	1.8506	0.1268
FITTING ΔP	(kg/cm^2)	0.0037		0.0759	0.0000	0.0050	0.0100
TOTAL ΔP	(kg/cm^2)	**0.0927**		**0.5530**	**0.0595**	**1.8555**	**0.1368**

NOTES

1. Differential shut off pressure at max impeller size shall be lower than pump differential pressure X 1.25.
   Max suction pressure = Max suction static head + Suction equipment design pressure
2. BD is exported by truck via 90-P-344A/B, Butadiene Circulation Pumps.
3. BD is not circulated from/to jetty during export.
4. LLL is considered for NPSHa.

: SELECTED DATA FOR PUMP DATASHEET

PUMP HYDRAULIC CALCULATION SHEET

LOTTE E&C

REV	DATE	BY	CHK'D	APP'D
2	07-Mar-2024	J.H.JUNG	S.K.PARK	C.M.BAE
1	06-Feb-2023	J.H.JUNG	S.K.PARK	C.M.BAE
0	30-Jun-2022	J.H.JUNG	S.K.PARK	C.M.BAE
3	14-Jun-2024	J.H.JUNG	S.K.PARK	C.M.BAE

REVISION

1	PROJECT :	LINE PROJECT	JOB NO. :	15005
2	CLIENT :	PT LOTTE CHEMICAL INDONESIA	DOCU. NO. :	LINE-900-BC-4-0001
3	LOCATION :	CILEGON, INDONESIA	ITEM NO. :	**90-P-344A/B**
4	UNIT :	WP5	NO. REQUIRED :	2 (TWO)
5	SERVICE :	**BUTADIENE CIRCULATION PUMPS**	SHEET :	2 OF 3

	FLUID			
7	LIQUID PUMPED		Butadiene	
8	OPERATING TEMPERATURE	(℃)	5.0	
9	VISCOSITY @ OP. TEMP.	(cP)	0.168	
10	VAPOR PRESS. @ OP. TEMP.	(kg/cm2A)	1.47	
11	SP. GR. @ OP. TEMP.	(-)	0.640	
12				
13	NORMAL CAPACITY (51.2 t/h)	(m3/hr)	80	
14	EXCESS RATIO	(%)	10	
15	RATED CAPACITY	(m3/hr)	88	
16	**SUCTION**			
17	PRESS. @ EQUIPMENT	(kg/cm2A) (kg/cm2G)	1.47	0.44
18	MIN. STATIC HEAD	(m)	3.5	(NOTE 4)
19	PIPE FRICTION	(kg/cm2)	0.072	
20	STRAINER	(kg/cm2)	0.07	
21		(kg/cm2)		
22		(kg/cm2)		
23				
24	NET SUC. PRESS.	(kg/cm2A) (kg/cm2G)	1.552	0.5
25	NPSH a @ Suction Nozzle Center	(m)	1.3	
26	**DISCHARGE**			
27	PRESS. @ EQUIP. or BL	(kg/cm2A) (kg/cm2G)	1.97	0.94
28	STATIC HEAD	(m)	5.0	
29	PIPE FRICTION	(kg/cm2)	3.261	
30	FE-3024	(kg/cm2)	0.24	
31	LOADING ARM △P	(kg/cm2)	1.0	
32		(kg/cm2)		
33		(kg/cm2)		
34		(kg/cm2)		
35		(kg/cm2)		
36		(kg/cm2)		
37				
38	TOTAL DISCH. PRESS.	(kg/cm2A) (kg/cm2G)	6.79	5.8
39	SUC. PRESS.	(kg/cm2A) (kg/cm2G)	1.55	0.5
40	DIFF. PRESS. (ΔP)	(kg/cm2)	5.2	
41	TOTAL HEAD (NET)	(m)	82	
42	TOTAL HEAD (TAKE)	(m)		
43	DIFF. PRESS. (ΔP) (TAKE)	(kg/cm2)		
44	TOTAL DISCH. PRESS. (TAKE)	(kg/cm2G)		
45				
46				
47				
48	**MAX SHUT OFF PRESSURE (NOTE 1)**			
49	MAX. SUC. STATIC HEAD	(m)		
50	SUC. EQUIP. DESIGN PRESS.	(kg/cm2G)		
51	MAX. SUC. PRESS.	(kg/cm2G)		
52	DIFF. PRESS. (ΔP) (TAKE)	(kg/cm2)		
53	SHUTOFF COEFF.	(%)		
54	MAX. SHUTOFF PRESS.	(kg/cm2G)		

SKETCH

CASE 2 : TRUCK LOADING

1 OPERATION + 1 STANDBY, TYPE : VERTICAL CAN

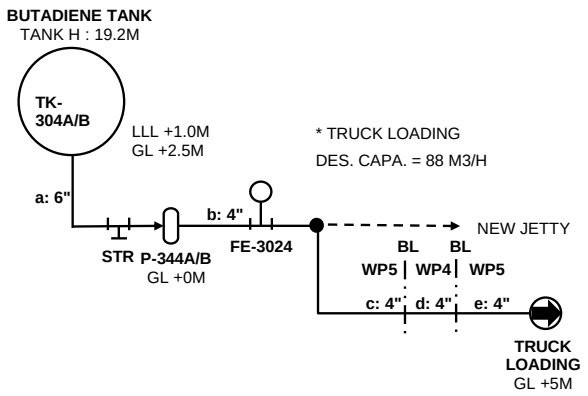

PIPE PRESSURE DROP

PIPING MATERIAL (C.S. or SUS.) : C.S. (3C1P)

		Suction		Discharge			
SECTION		**a**		**b**	**c**	**d**	**e**
FLOW RATE	(m^3/h)	88		88	88	88	88
PIPE ID	(in)	**6**		**4**	**4**	**4**	**4**
PIPE SCH.	(in)	40		40	40	40	40
PIPE ID	(mm)	154.05		102.26	102.26	102.26	
ROUGHNESS	(mm)	0.046		0.046	0.046	0.046	0.046
VELOCITY	(m/s)	**1.311**		**2.976**	**2.976**	**2.976**	**2.976**
REYNOLDS NO.	(-)	769659		1159456	1159456	1352966	1158550
FRICTION FACTOR	(-)	0.004		0.004	0.004	0.004	0.004
ΔP / 100m	(kg/cm^2)	**0.058**		**0.474**	**0.474**	**0.456**	**0.474**
STRAIGHT LENGTH	(m)	120		42	90	66	480
NO. OF PIPE ENTRANCE							
NO. OF PIPE EXIT							
NO. OF 90 ELBOW							
NO. OF TEE							
NO. OF GLOBE VALVE							
NO. OF GATE VALVE		4		3	1		5
NO. OF CHECK VALVE				1			
NO. OF BUTTER VALVE							
NO. OF BALL VALVE							
NO. OF CONTRACT							
NO. OF ENLARGER							
OTHER Ks							
PIPE ΔP	(kg/cm^2)	0.0693		0.1992	0.4269	0.3010	2.275
FITTING ΔP	(kg/cm^2)	0.0028		0.0353	0.0040	0.0000	0.020
TOTAL ΔP	(kg/cm^2)	**0.0721**		**0.2345**	**0.4308**	**0.3010**	**2.295**

NOTES

1. Differential shut off pressure at max impeller size shall be lower than pump differential pressure X 1.25.
   Max suction pressure = Max suction static head + Suction equipment design pressure
2. BD is exported by truck via 90-P-344A/B, Butadiene Circulation Pumps.
3. BD is not circulated from/to jetty during export.
4. LLL is considered for NPSHa.

PUMP HYDRAULIC CALCULATION SHEET

LOTTE E&C

REV	DATE	BY	CHK'D	APP'D
2	07-Mar-2024	J.H.JUNG	S.K.PARK	C.M.BAE
1	06-Feb-2023	J.H.JUNG	S.K.PARK	C.M.BAE
0	30-Jun-2022	J.H.JUNG	S.K.PARK	C.M.BAE
3	14-Jun-2024	J.H.JUNG	S.K.PARK	C.M.BAE

REVISION

1	PROJECT :	LINE PROJECT	JOB NO. :	15005
2	CLIENT :	PT LOTTE CHEMICAL INDONESIA	DOCU. NO. :	LINE-900-BC-4-0001
3	LOCATION :	CILEGON, INDONESIA	ITEM NO. :	**90-P-344A/B**
4	UNIT :	WP5	NO. REQUIRED :	2 (TWO)
5	SERVICE :	**BUTADIENE CIRCULATION PUMPS**	SHEET :	3 OF 3

	FLUID		
7	LIQUID PUMPED		Butadiene
8	OPERATING TEMPERATURE	(℃)	5.0
9	VISCOSITY @ OP. TEMP.	(cP)	0.168
10	VAPOR PRESS. @ OP. TEMP.	(kg/cm2A)	1.47
11	SP. GR. @ OP. TEMP.	(-)	0.640
12			
13	NORMAL CAPACITY (58 t/h)	(m3/hr)	91
14	EXCESS RATIO	(%)	10
15	RATED CAPACITY	(m3/hr)	100
16	**SUCTION**		
17	PRESS. @ EQUIPMENT (kg/cm2A)	(kg/cm2G)	
18	MIN. STATIC HEAD	(m)	
19	PIPE FRICTION	(kg/cm2)	
20		(kg/cm2)	
21		(kg/cm2)	
22		(kg/cm2)	
23			
24	NET SUC. PRESS. (kg/cm2A)	(kg/cm2G)	
25	NPSH a @ Suction Nozzle Center	(m)	
26	**DISCHARGE**		
27	PRESS. @ EQUIP. or BL (kg/cm2A)	(kg/cm2G)	
28	STATIC HEAD	(m)	
29	PIPE FRICTION	(kg/cm2)	
30		(kg/cm2)	
31		(kg/cm2)	
32		(kg/cm2)	
33		(kg/cm2)	
34		(kg/cm2)	
35		(kg/cm2)	
36		(kg/cm2)	
37			
38	TOTAL DISCH. PRESS. (kg/cm2A)	(kg/cm2G)	
39	SUC. PRESS. (kg/cm2A)	(kg/cm2G)	
40	DIFF. PRESS. (ΔP)	(kg/cm2)	
41	TOTAL HEAD (NET)	(m)	
42	TOTAL HEAD (TAKE)	(m)	
43	DIFF. PRESS. (ΔP) (TAKE)	(kg/cm2)	
44	TOTAL DISCH. PRESS. (TAKE)	(kg/cm2G)	
45			
46			
47			
48	**MAX SHUT OFF PRESSURE (NOTE 1)**		
49	MAX. SUC. STATIC HEAD	(m)	
50	SUC. EQUIP. DESIGN PRESS.	(kg/cm2G)	
51	MAX. SUC. PRESS.	(kg/cm2G)	
52	DIFF. PRESS. (ΔP) (TAKE)	(kg/cm2)	
53	SHUTOFF COEFF.	(%)	
54	MAX. SHUTOFF PRESS.	(kg/cm2G)	

SKETCH

PUMP MINIMUM FLOW LINE

1 OPERATION + 1 STANDBY, TYPE : VERTICAL CAN

MINIMUM FLOWRATE IS VENDOR DATA.

PUMP MINIMUM FLOWRATE =	38	m3/hr	
PUMP DISCH. P. AS PER CURVE =	11.6	kg/cm2g	(1)
SUCTION EQUIPMENT PRESS. =	0.44	kg/cm2g	(2)
SUCTION EQUIPMENT HEAD =	21.7	m	
	1.39	kg/cm2	(3)
PIPE FRICTION =	0.74	kg/cm2	(4)
FE-3024 DEL P =	0.24	kg/cm2	(5)
OTHERS DEL P =		kg/cm2	(6)
OTHERS DEL P =		kg/cm2	(7)
FV-3024 DEL P =	**8.8**	**kg/cm2**	(8)

(8) = (1) - (2) - (3) - (4) - (5) - (6) - (7)

PIPE PRESSURE DROP

PIPING MATERIAL (C.S. or SUS.) : C.S. (3C1P)

		Suction		Discharge			
SECTION				**a**			
FLOW RATE	(m^3/h)			38			
PIPE ID	(in)			3			
PIPE SCH.	(in)			40			
PIPE ID	(mm)			77.93			
ROUGHNESS	(mm)			0.046			
VELOCITY	(m/s)			**2.213**			
REYNOLDS NO.	(-)			656986			
FRICTION FACTOR	(-)			0.005			
ΔP / 100m	(kg/cm^2)			**0.369**			
STRAIGHT LENGTH	(m)			200			
NO. OF PIPE ENTRANCE							
NO. OF PIPE EXIT							
NO. OF 90 ELBOW							
NO. OF TEE							
NO. OF GLOBE VALVE							
NO. OF GATE VALVE							
NO. OF CHECK VALVE							
NO. OF BUTTER VALVE							
NO. OF BALL VALVE							
NO. OF CONTRACT							
NO. OF ENLARGER							
OTHER Ks							
PIPE ΔP	(kg/cm^2)			0.7383			
FITTING ΔP	(kg/cm^2)			0.0000			
TOTAL ΔP	(kg/cm^2)			**0.7383**			

NOTES

1. Differential shut off pressure at max impeller size shall be lower than pump differential pressure X 1.25.
   Max suction pressure = Max suction static head + Suction equipment design pressure

PUMP HYDRAULIC CALCULATION SHEET

LOTTE E&C

REV	DATE	BY	CHK'D	APP'D
2	07-Mar-2024	J.H.JUNG	S.K.PARK	C.M.BAE
1	06-Feb-2023	J.H.JUNG	S.K.PARK	C.M.BAE
0	30-Jun-2022	J.H.JUNG	S.K.PARK	C.M.BAE
3	14-Jun-2024	J.H.JUNG	S.K.PARK	C.M.BAE

REVISION

1	PROJECT :	LINE PROJECT	JOB NO. :	15005
2	CLIENT :	PT LOTTE CHEMICAL INDONESIA	DOCU. NO. :	LINE-900-BC-4-0001
3	LOCATION :	CILEGON, INDONESIA	ITEM NO. :	**90-P-350**
4	UNIT :	WP5	NO. REQUIRED :	1 (ONE)
5	SERVICE :	**OWS PUMP FOR SPHERE TANK AREA**	SHEET :	1 OF 1

6	**FLUID**			
7	LIQUID PUMPED		OILY WATER	
8	OPERATING TEMPERATURE	(℃)	22.7	AMB
9	VISCOSITY @ OP. TEMP.	(cP)	0.89	
10	VAPOR PRESS. @ OP. TEMP.	(kg/cm2A)	0.032	
11	SP. GR. @ OP. TEMP.	(-)	0.997	
12				
13	NORMAL CAPACITY (300 t/h)	(m3/hr)	-	
14	EXCESS RATIO	(%)	-	
15	RATED CAPACITY	(m3/hr)	40	
16	**SUCTION**			
17	PRESS. @ EQUIPMENT	(kg/cm2A) (kg/cm2G)	1.03	0.00
18	MIN. STATIC HEAD	(m)	0.5	(NOTE 3)
19	PIPE FRICTION	(kg/cm2)	0.000	
20	STRAINER	(kg/cm2)	0.05	assumed
21		(kg/cm2)		
22		(kg/cm2)		
23				
24	NET SUC. PRESS.	(kg/cm2A) (kg/cm2G)	1.033	0.0
25	NPSH a @Suction Nozzle Center	(m)	10.0	
26	**DISCHARGE**			
27	PRESS. @ EQUIP. or BL	(kg/cm2A) (kg/cm2G)	1.03	0.00
28	STATIC HEAD	(m)	13.5	
29	PIPE FRICTION	(kg/cm2)	1.422	
30	FT-3150	(kg/cm2)	0.20	
31	MARGIN	(kg/cm2)	0.52	
32		(kg/cm2)		
33		(kg/cm2)		
34		(kg/cm2)		
35		(kg/cm2)		
36		(kg/cm2)		
37				
38	TOTAL DISCH. PRESS.	(kg/cm2A) (kg/cm2G)	4.5	3.5
39	SUC. PRESS.	(kg/cm2A) (kg/cm2G)	1.0	0.0
40	DIFF. PRESS. (ΔP)	(kg/cm2)	3.5	
41	TOTAL HEAD (NET)	(m)	35	
42	TOTAL HEAD (TAKE)	(m)	35	
43	DIFF. PRESS. (ΔP) (TAKE)	(kg/cm2)	3.5	
44	TOTAL DISCH. PRESS. (TAKE)	(kg/cm2G)	3.5	(NOTE 2)
45				
46				
47				
48	**MAX SHUT OFF PRESSURE (NOTE 1)**			
49	MAX. SUC. STATIC HEAD	(m)	3.5	
50	SUC. EQUIP. DESIGN PRESS.	(kg/cm2G)	3.5	
51	MAX. SUC. PRESS.	(kg/cm2G)	3.8	
52	DIFF. PRESS. (ΔP) (TAKE)	(kg/cm2)	3.5	
53	SHUTOFF COEFF.	(%)	125	
54	MAX. SHUTOFF PRESS.	(kg/cm2G)	8.2	

SKETCH

CASE : OWS TRANSFER TO OWS TANK

1 OPERATION + 1 COMMON WAREHOUSE SPARE, TYPE : VERTICAL SUMP (VS4)

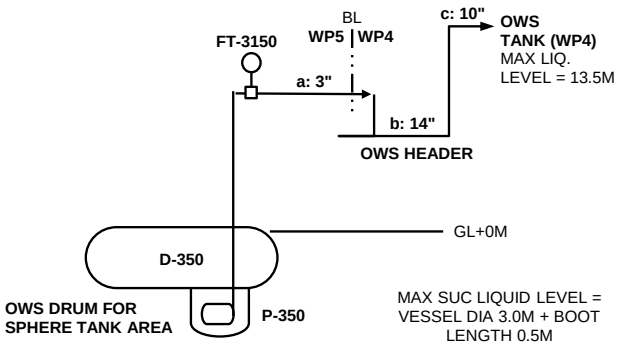

* P-150B IS WAREHOUSE SPARE

PIPE PRESSURE DROP

PIPING MATERIAL (C.S. or SUS.) : C.S. (1C1W)

		Suction		Discharge		
SECTION				**a**	**b**	**c**
FLOW RATE	(m^3/h)			40	600	600
PIPE ID	(in)			3	14	10
PIPE SCH.	(in)			40	STD	40
PIPE ID	(mm)			77.93	336.55	254.51
ROUGHNESS	(mm)			0.046	0.046	0.046
VELOCITY	(m/s)			**2.329**	**1.874**	**3.276**
REYNOLDS NO.	(-)			203361	706339	934024
FRICTION FACTOR	(-)			0.005	0.004	0.004
ΔP / 100m	(kg/cm^2)			**0.681**	**0.076**	**0.311**
STRAIGHT LENGTH	(m)			60	1128	50
NO. OF PIPE ENTRANCE						
NO. OF PIPE EXIT						
NO. OF 90 ELBOW						
NO. OF TEE						
NO. OF GLOBE VALVE						
NO. OF GATE VALVE						
NO. OF CHECK VALVE						
NO. OF BUTTER VALVE						
NO. OF BALL VALVE						
NO. OF CONTRACT						
NO. OF ENLARGER						
OTHER Ks						
PIPE ΔP	(kg/cm^2)			0.4086	0.8572	0.1557
FITTING ΔP	(kg/cm^2)			0.0000	0.0000	0.0000
TOTAL ΔP	(kg/cm^2)			**0.4086**	**0.8572**	**0.1557**

NOTES

1. Differential shut off pressure at max impeller size shall be lower than pump differential pressure X 1.25.
   Max suction pressure = Max suction static head + Suction equipment design pressure
2. Discharge pressure at the outlet nozzle (grade)
3. LLL is considered for NPSHa.

: SELECTED DATA FOR PUMP DATASHEET

PUMP HYDRAULIC CALCULATION SHEET

LOTTE E&C

REV	DATE	BY	CHK'D	APP'D
2	07-Mar-2024	J.H.JUNG	S.K.PARK	C.M.BAE
1	06-Feb-2023	J.H.JUNG	S.K.PARK	C.M.BAE
0	30-Jun-2022	J.H.JUNG	S.K.PARK	C.M.BAE
3	14-Jun-2024	J.H.JUNG	S.K.PARK	C.M.BAE

REVISION

1	PROJECT :	LINE PROJECT	JOB NO. :	15005
2	CLIENT :	PT LOTTE CHEMICAL INDONESIA	DOCU. NO. :	LINE-900-BC-4-0001
3	LOCATION :	CILEGON, INDONESIA	ITEM NO. :	**90-P-401A/B/C**
4	UNIT :	WP5	NO. REQUIRED :	3 (THREE)
5	SERVICE :	**RPG FEED PUMPS**	SHEET :	1 OF 5

	FLUID			
7	LIQUID PUMPED		RPG	
8	OPERATING TEMPERATURE	(℃)	22.7	AMB
9	VISCOSITY @ OP. TEMP.	(cP)	0.482	
10	VAPOR PRESS. @ OP. TEMP.	(kg/cm2A)	0.318	
11	SP. GR. @ OP. TEMP.	(-)	0.810	
12				
13	NORMAL CAPACITY (50 t/h)	(m3/hr)	62	
14	EXCESS RATIO	(%)	10	
15	RATED CAPACITY	(m3/hr)	68	
16	**SUCTION**			
17	PRESS. @ EQUIPMENT	(kg/cm2A) (kg/cm2G)	1.03	0.00
18	MIN. STATIC HEAD	(m)	-0.30	
19	PIPE FRICTION	(kg/cm2)	0.171	
20	STRAINER	(kg/cm2)	0.07	
21		(kg/cm2)		
22		(kg/cm2)		
23				
24	NET SUC. PRESS.	(kg/cm2A) (kg/cm2G)	0.767	-0.3
25	NPSH a @ Suction Nozzle Center	(m)	5.5	
26	**DISCHARGE**			
27	PRESS. @ EQUIP. or BL	(kg/cm2A) (kg/cm2G)	8.03	7.0
28	STATIC HEAD	(m)	4.7	
29	PIPE FRICTION	(kg/cm2)	1.688	
30	FE-4002	(kg/cm2)	0.20	
31	FE-4003	(kg/cm2)	0.20	
32	MARGIN	(kg/cm2)	0.55	
33		(kg/cm2)		
34		(kg/cm2)		
35		(kg/cm2)		
36		(kg/cm2)		
37				
38	TOTAL DISCH. PRESS.	(kg/cm2A) (kg/cm2G)	11.1	10.0
39	SUC. PRESS.	(kg/cm2A) (kg/cm2G)	0.8	-0.3
40	DIFF. PRESS. (ΔP)	(kg/cm2)	10.3	
41	TOTAL HEAD (NET)	(m)	127	
42	TOTAL HEAD (TAKE)	(m)	127	
43	DIFF. PRESS. (ΔP) (TAKE)	(kg/cm2)	10.3	
44	TOTAL DISCH. PRESS. (TAKE)	(kg/cm2G)	10.0	
45				
46				
47				
48	**MAX SHUT OFF PRESSURE (NOTE 1)**			
49	MAX. SUC. STATIC HEAD	(m)	14.2	
50	SUC. EQUIP. DESIGN PRESS.	(kg/cm2G)	0.015	
51	MAX. SUC. PRESS.	(kg/cm2G)	1.2	
52	DIFF. PRESS. (ΔP) (TAKE)	(kg/cm2)	10.3	
53	SHUTOFF COEFF.	(%)	125	
54	MAX. SHUTOFF PRESS.	(kg/cm2G)	14.0	

SKETCH

CASE 1 : FEED TO BTX (GOVERNING)

2 OPERATION + 1 STANDBY, TYPE : HORIZONTAL CENTRIFUGAL

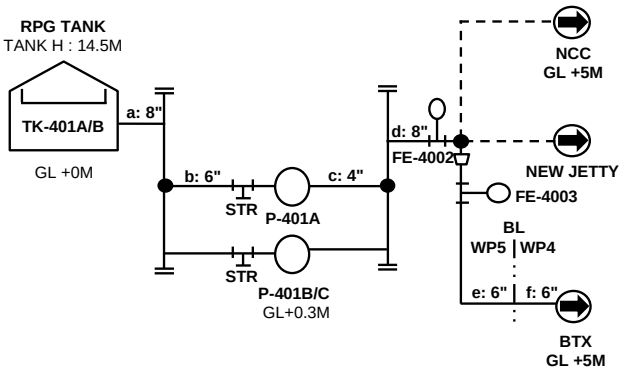

PIPE PRESSURE DROP

PIPING MATERIAL (C.S. or SUS.) : C.S. (1C1P)

		Suction		Discharge			
SECTION		**a**	**b**	**c**	**d**	**e**	**f**
FLOW RATE	(m^3/h)	204	68	68	136	136	136
PIPE ID	(in)	**8**	**6**	**4**	**8**	**6**	**6**
PIPE SCH.	(in)	40	40	40	40	40	40
PIPE ID	(mm)	202.72	154.05	102.26	202.72	154.05	154.05
ROUGHNESS	(mm)	0.046	0.046	0.046	0.046	0.046	0.046
VELOCITY	(m/s)	**1.752**	**1.011**	**2.295**	**1.168**	**2.023**	**2.023**
REYNOLDS NO.	(-)	596963	261855	394472	397975	523710	523710
FRICTION FACTOR	(-)	0.004	0.004	0.004	0.004	0.004	0.004
ΔP / 100m	(kg/cm^2)	**0.097**	**0.047**	**0.374**	**0.044**	**0.178**	**0.178**
STRAIGHT LENGTH	(m)	158	29	29	66	312	547
NO. OF PIPE ENTRANCE							
NO. OF PIPE EXIT							
NO. OF 90 ELBOW							
NO. OF TEE							
NO. OF GLOBE VALVE							
NO. OF GATE VALVE		3	1	1		1	
NO. OF CHECK VALVE				1			
NO. OF BUTTER VALVE							
NO. OF BALL VALVE							
NO. OF CONTRACT							
NO. OF ENLARGER							
OTHER Ks							
PIPE ΔP	(kg/cm^2)	0.1526	0.0136	0.1077	0.0293	0.5549	0.9732
FITTING ΔP	(kg/cm^2)	0.0046	0.0005	0.0206	0.0000	0.0021	0.0000
TOTAL ΔP	(kg/cm^2)	**0.1572**	**0.0141**	**0.1283**	**0.0293**	**0.5570**	**0.9732**

NOTES

1. Differential shut off pressure at max impeller size shall be lower than pump differential pressure X 1.25.
   Max suction pressure = Max suction static head + Suction equipment design pressure
2. Two pumps are operating to feed to process unit.
   Three pumps are operating to export to jetty.

: SELECTED DATA FOR PUMP DATASHEET

PUMP HYDRAULIC CALCULATION SHEET

LOTTE E&C

REV	DATE	BY	CHK'D	APP'D
2	07-Mar-2024	J.H.JUNG	S.K.PARK	C.M.BAE
1	06-Feb-2023	J.H.JUNG	S.K.PARK	C.M.BAE
0	30-Jun-2022	J.H.JUNG	S.K.PARK	C.M.BAE
3	14-Jun-2024	J.H.JUNG	S.K.PARK	C.M.BAE

REVISION

1	PROJECT :	LINE PROJECT	JOB NO. :	15005
2	CLIENT :	PT LOTTE CHEMICAL INDONESIA	DOCU. NO. :	LINE-900-BC-4-0001
3	LOCATION :	CILEGON, INDONESIA	ITEM NO. :	**90-P-401A/B/C**
4	UNIT :	WP5	NO. REQUIRED :	3 (THREE)
5	SERVICE :	**RPG FEED PUMPS**	SHEET :	2 OF 5

	FLUID			
7	LIQUID PUMPED		RPG	
8	OPERATING TEMPERATURE	(℃)	22.7	AMB
9	VISCOSITY @ OP. TEMP.	(cP)	0.482	
10	VAPOR PRESS. @ OP. TEMP.	(kg/cm2A)	0.318	
11	SP. GR. @ OP. TEMP.	(-)	0.810	
12				
13	NORMAL CAPACITY (50 t/h)	(m3/hr)	62	
14	EXCESS RATIO	(%)	10	
15	RATED CAPACITY	(m3/hr)	68	
16	**SUCTION**			
17	PRESS. @ EQUIPMENT	(kg/cm2A) (kg/cm2G)	1.03	0.00
18	MIN. STATIC HEAD	(m)	-0.30	
19	PIPE FRICTION	(kg/cm2)	0.171	
20	STRAINER	(kg/cm2)	0.07	
21		(kg/cm2)		
22		(kg/cm2)		
23				
24	NET SUC. PRESS.	(kg/cm2A) (kg/cm2G)	0.767	-0.3
25	NPSH a @ Suction Nozzle Center	(m)	5.5	
26	**DISCHARGE**			
27	PRESS. @ EQUIP. or BL	(kg/cm2A) (kg/cm2G)	1.53	0.50
28	STATIC HEAD	(m)	9.7	
29	PIPE FRICTION	(kg/cm2)	3.170	
30	FE-4002	(kg/cm2)	0.20	
31	FE-4004	(kg/cm2)	0.20	
32	FE-6012	(kg/cm2)	0.20	
33	LOADING ARM ΔP	(kg/cm2)	1.00	
34		(kg/cm2)		
35		(kg/cm2)		
36		(kg/cm2)		
37				
38	TOTAL DISCH. PRESS.	(kg/cm2A) (kg/cm2G)	7.1	6.1
39	SUC. PRESS.	(kg/cm2A) (kg/cm2G)	0.8	-0.3
40	DIFF. PRESS. (ΔP)	(kg/cm2)	6.3	
41	TOTAL HEAD (NET)	(m)	78	
42	TOTAL HEAD (TAKE)	(m)		
43	DIFF. PRESS. (ΔP) (TAKE)	(kg/cm2)		
44	TOTAL DISCH. PRESS. (TAKE)	(kg/cm2G)		
45				
46				
47				
48	**MAX SHUT OFF PRESSURE (NOTE 1)**			
49	MAX. SUC. STATIC HEAD	(m)		
50	SUC. EQUIP. DESIGN PRESS.	(kg/cm2G)		
51	MAX. SUC. PRESS.	(kg/cm2G)		
52	DIFF. PRESS. (ΔP) (TAKE)	(kg/cm2)		
53	SHUTOFF COEFF.	(%)		
54	MAX. SHUTOFF PRESS.	(kg/cm2G)		

SKETCH

CASE 2 : EXPORT TO NEW JETTY

3 OPERATION + 0 STANDBY, TYPE : HORIZONTAL CENTRIFUGAL

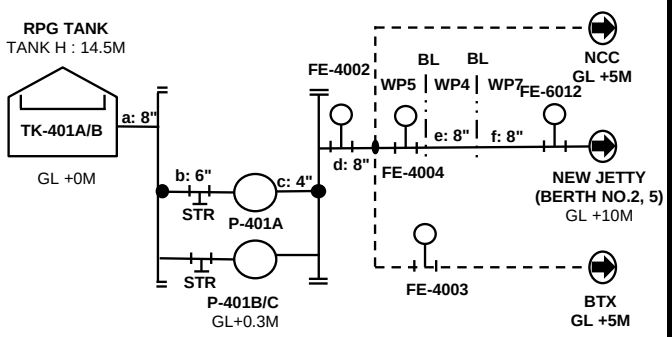

PIPE PRESSURE DROP

PIPING MATERIAL (C.S. or SUS.) : C.S. (1C1P)

		Suction		Discharge			
SECTION		**a**	**b**	**c**	**d**	**e**	**f**
FLOW RATE	(m^3/h)	204	68	68	204	204	204
PIPE ID	(in)	**8**	**6**	**4**	**8**	**8**	**8**
PIPE SCH.	(in)	40	40	40	40	40	40
PIPE ID	(mm)	202.72	154.05	102.26	202.72	40.00	202.72
ROUGHNESS	(mm)	0.046	0.046	0.046	0.046	0.046	0.046
VELOCITY	(m/s)	**1.752**	**1.011**	**2.295**	**1.752**	**1.752**	**1.752**
REYNOLDS NO.	(-)	596963	261855	394472	596963	596963	596963
FRICTION FACTOR	(-)	0.004	0.004	0.004	0.004	0.004	0.004
ΔP / 100m	(kg/cm^2)	**0.097**	**0.047**	**0.374**	**0.097**	**0.097**	**0.097**
STRAIGHT LENGTH	(m)	158	29	29	378	1044	1692
NO. OF PIPE ENTRANCE							
NO. OF PIPE EXIT							
NO. OF 90 ELBOW							
NO. OF TEE							
NO. OF GLOBE VALVE							
NO. OF GATE VALVE		3	1	1	4		4
NO. OF CHECK VALVE				1	1		1
NO. OF BUTTER VALVE							
NO. OF BALL VALVE							
NO. OF CONTRACT							
NO. OF ENLARGER							
OTHER Ks							
PIPE ΔP	(kg/cm^2)	0.1526	0.0136	0.1077	0.3655	1.0094	1.6360
FITTING ΔP	(kg/cm^2)	0.0046	0.0005	0.0206	0.0152	0.0000	0.0152
TOTAL ΔP	(kg/cm^2)	**0.1572**	**0.0141**	**0.1283**	**0.3806**	**1.0094**	**1.6511**

NOTES

1. Differential shut off pressure at max impeller size shall be lower than pump differential pressure X 1.25.
   Max suction pressure = Max suction static head + Suction equipment design pressure
2. Two pumps are operating to feed to process unit.
   Three pumps are operating to export to jetty.

PUMP HYDRAULIC CALCULATION SHEET

LOTTE E&C

REV	DATE	BY	CHK'D	APP'D
2	07-Mar-2024	J.H.JUNG	S.K.PARK	C.M.BAE
1	06-Feb-2023	J.H.JUNG	S.K.PARK	C.M.BAE
0	30-Jun-2022	J.H.JUNG	S.K.PARK	C.M.BAE
3	14-Jun-2024	J.H.JUNG	S.K.PARK	C.M.BAE

REVISION

1	PROJECT :	LINE PROJECT	JOB NO. :	15005
2	CLIENT :	PT LOTTE CHEMICAL INDONESIA	DOCU. NO. :	LINE-900-BC-4-0001
3	LOCATION :	CILEGON, INDONESIA	ITEM NO. :	**90-P-401A/B/C**
4	UNIT :	WP5	NO. REQUIRED :	3 (THREE)
5	SERVICE :	**RPG FEED PUMPS**	SHEET :	3 OF 5

	FLUID			
7	LIQUID PUMPED		QUENCH WATER	
8	OPERATING TEMPERATURE	(℃)	40.0	
9	VISCOSITY @ OP. TEMP.	(cP)	0.546	
10	VAPOR PRESS. @ OP. TEMP.	(kg/cm2A)	0.075	
11	SP. GR. @ OP. TEMP.	(-)	0.992	
12				
13	NORMAL CAPACITY (50 t/h)	(m3/hr)	50	
14	EXCESS RATIO	(%)	10	
15	RATED CAPACITY	(m3/hr)	55	
16	**SUCTION**			
17	PRESS. @ EQUIPMENT	(kg/cm2A) (kg/cm2G)	1.03	0.00
18	MIN. STATIC HEAD	(m)	-0.30	
19	PIPE FRICTION	(kg/cm2)	0.070	
20	STRAINER	(kg/cm2)	0.07	
21		(kg/cm2)		
22		(kg/cm2)		
23				
24	NET SUC. PRESS.	(kg/cm2A) (kg/cm2G)	0.863	-0.2
25	NPSH a @ Suction Nozzle Center	(m)	7.9	
26	**DISCHARGE**			
27	PRESS. @ EQUIP. or BL	(kg/cm2A) (kg/cm2G)	11.83	10.80
28	STATIC HEAD	(m)	4.7	
29	PIPE FRICTION	(kg/cm2)	1.135	
30	FE-4002	(kg/cm2)	0.20	
31	MARGIN	(kg/cm2)	0.50	
32		(kg/cm2)		
33		(kg/cm2)		
34		(kg/cm2)		
35		(kg/cm2)		
36		(kg/cm2)		
37				
38	TOTAL DISCH. PRESS.	(kg/cm2A) (kg/cm2G)	14.1	13.1
39	SUC. PRESS.	(kg/cm2A) (kg/cm2G)	0.9	-0.2
40	DIFF. PRESS. (ΔP)	(kg/cm2)	13.3	
41	TOTAL HEAD (NET)	(m)	134	(NOTE 3)
42	TOTAL HEAD (TAKE)	(m)		
43	DIFF. PRESS. (ΔP) (TAKE)	(kg/cm2)		
44	TOTAL DISCH. PRESS. (TAKE)	(kg/cm2G)		
45				
46				
47				
48	**MAX SHUT OFF PRESSURE (NOTE 1)**			
49	MAX. SUC. STATIC HEAD	(m)		
50	SUC. EQUIP. DESIGN PRESS.	(kg/cm2G)		
51	MAX. SUC. PRESS.	(kg/cm2G)		
52	DIFF. PRESS. (ΔP) (TAKE)	(kg/cm2)		
53	SHUTOFF COEFF.	(%)		
54	MAX. SHUTOFF PRESS.	(kg/cm2G)		

SKETCH

CASE 3 : QUENCH WATER RETEURN TO NCC

2 OPERATION + 1 STANDBY, TYPE : HORIZONTAL CENTRIFUGAL

*** QUENCH WATER FLOWRATE
(1) REQUIRED = 110 T/H (NCC BL SUMMARY)
(2) AS PER PUMP CAPA. = 136 T/H
NCC BL PRESSURE AS PER PUMP RATED HEAD

TANK H : 14.5M

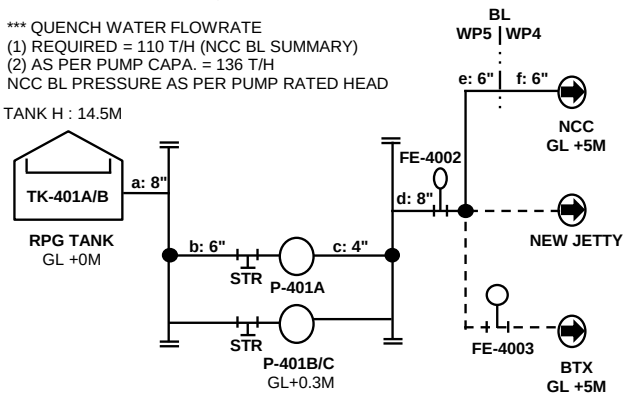

PIPE PRESSURE DROP

PIPING MATERIAL (C.S. or SUS.) : C.S. (1C1P)

		Suction		Discharge			
SECTION		**a**	**b**	**c**	**d**	**e**	**f**
FLOW RATE	(m^3/h)	110	55	55	110	110	110
PIPE ID	(in)	**8**	**6**	**4**	**8**	**6**	**6**
PIPE SCH.	(in)	40	40	40	40	40	40
PIPE ID	(mm)	202.72	154.05	102.26	202.72	154.05	154.05
ROUGHNESS	(mm)	0.046	0.046	0.046	0.046	0.046	0.046
VELOCITY	(m/s)	**0.947**	**0.820**	**1.860**	**0.947**	**1.639**	**1.639**
REYNOLDS NO.	(-)	348781	229487	345712	348781	458974	458974
FRICTION FACTOR	(-)	0.004	0.004	0.004	0.004	0.004	0.004
ΔP / 100m	(kg/cm^2)	**0.036**	**0.038**	**0.304**	**0.036**	**0.144**	**0.144**
STRAIGHT LENGTH	(m)	158	29	29	378	168	450
NO. OF PIPE ENTRANCE							
NO. OF PIPE EXIT							
NO. OF 90 ELBOW							
NO. OF TEE							
NO. OF GLOBE VALVE							
NO. OF GATE VALVE		3	1	1		1	
NO. OF CHECK VALVE				1			
NO. OF BUTTER VALVE							
NO. OF BALL VALVE							
NO. OF CONTRACT							
NO. OF ENLARGER							
OTHER Ks							
PIPE ΔP	(kg/cm^2)	0.0572	0.0111	0.0874	0.1370	0.2426	0.6499
FITTING ΔP	(kg/cm^2)	0.0016	0.0004	0.0166	0.0000	0.0017	0.0000
TOTAL ΔP	(kg/cm^2)	**0.0588**	**0.0115**	**0.1040**	**0.1370**	**0.2444**	**0.6499**

NOTES

1. Differential shut off pressure at max impeller size shall be lower than pump differential pressure X 1.25.
   Max suction pressure = Max suction static head + Suction equipment design pressure
2. Two pumps are operating to feed to process unit.
   Three pumps are operating to export to jetty.
3. Total Head is applied as per pump performance curve.

PUMP HYDRAULIC CALCULATION SHEET

LOTTE E&C

REV	DATE	BY	CHK'D	APP'D
2	07-Mar-2024	J.H.JUNG	S.K.PARK	C.M.BAE
1	06-Feb-2023	J.H.JUNG	S.K.PARK	C.M.BAE
0	30-Jun-2022	J.H.JUNG	S.K.PARK	C.M.BAE
3	14-Jun-2024	J.H.JUNG	S.K.PARK	C.M.BAE

REVISION

1	PROJECT :	LINE PROJECT	JOB NO. :	15005
2	CLIENT :	PT LOTTE CHEMICAL INDONESIA	DOCU. NO. :	LINE-900-BC-4-0001
3	LOCATION :	CILEGON, INDONESIA	ITEM NO. :	**90-P-401A/B/C**
4	UNIT :	WP5	NO. REQUIRED :	3 (THREE)
5	SERVICE :	**RPG FEED PUMPS**	SHEET :	4 OF 5

	FLUID			
7	LIQUID PUMPED		RPG	
8	OPERATING TEMPERATURE	(℃)	22.7	AMB
9	VISCOSITY @ OP. TEMP.	(cP)	0.482	
10	VAPOR PRESS. @ OP. TEMP.	(kg/cm2A)	0.318	
11	SP. GR. @ OP. TEMP.	(-)	0.810	
12				
13	NORMAL CAPACITY (30 t/h)	(m3/hr)	37	
14	EXCESS RATIO	(%)	10	
15	RATED CAPACITY	(m3/hr)	41	
16	**SUCTION**			
17	PRESS. @ EQUIPMENT	(kg/cm2A) (kg/cm2G)	1.03	0.00
18	MIN. STATIC HEAD	(m)	-0.30	
19	PIPE FRICTION	(kg/cm2)	0.013	
20	STRAINER	(kg/cm2)	0.07	
21		(kg/cm2)		
22		(kg/cm2)		
23				
24	NET SUC. PRESS.	(kg/cm2A) (kg/cm2G)	0.926	-0.1
25	NPSH a @ Suction Nozzle Center	(m)	7.5	
26	**DISCHARGE**			
27	PRESS. @ EQUIP. or BL	(kg/cm2A) (kg/cm2G)	4.03	3.0
28	STATIC HEAD	(m)	4.7	
29	PIPE FRICTION	(kg/cm2)	0.814	
30	FE-4005	(kg/cm2)	0.20	
31		(kg/cm2)		
32		(kg/cm2)		
33		(kg/cm2)		
34		(kg/cm2)		
35		(kg/cm2)		
36		(kg/cm2)		
37				
38	TOTAL DISCH. PRESS.	(kg/cm2A) (kg/cm2G)	5.4	4.4
39	SUC. PRESS.	(kg/cm2A) (kg/cm2G)	0.9	-0.1
40	DIFF. PRESS. (ΔP)	(kg/cm2)	4.5	
41	TOTAL HEAD (NET)	(m)	56	
42	TOTAL HEAD (TAKE)	(m)		
43	DIFF. PRESS. (ΔP) (TAKE)	(kg/cm2)		
44	TOTAL DISCH. PRESS. (TAKE)	(kg/cm2G)		
45				
46				
47				
48	**MAX SHUT OFF PRESSURE (NOTE 1)**			
49	MAX. SUC. STATIC HEAD	(m)		
50	SUC. EQUIP. DESIGN PRESS.	(kg/cm2G)		
51	MAX. SUC. PRESS.	(kg/cm2G)		
52	DIFF. PRESS. (ΔP) (TAKE)	(kg/cm2)		
53	SHUTOFF COEFF.	(%)		
54	MAX. SHUTOFF PRESS.	(kg/cm2G)		

SKETCH

CASE 4 : RPG START UP AND OFF SPEC RETURN TO NCC

1 OPERATION + 2 STANDBY, TYPE : HORIZONTAL CENTRIFUGAL

*** REQUIRED FLOWRATE 33 T/H AS PER NCC BL SUMMARY

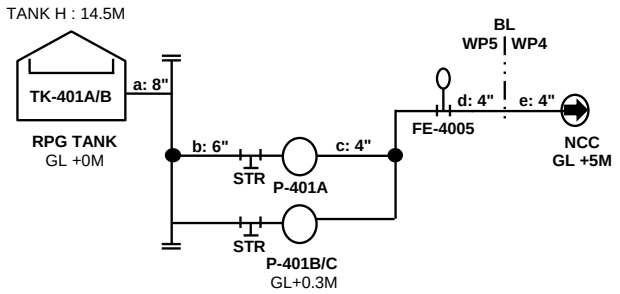

PIPE PRESSURE DROP

PIPING MATERIAL (C.S. or SUS.) : C.S. (1C1P)

		Suction		Discharge		
SECTION		**a**	**b**	**c**	**d**	**e**
FLOW RATE	(m^3/h)	41	41	41	41	41
PIPE ID	(in)	**8**	**6**	**4**	**4**	**4**
PIPE SCH.	(in)	40	40	40	40	40
PIPE ID	(mm)	202.72	154.05	102.26	102.26	102.26
ROUGHNESS	(mm)	0.046	0.046	0.046	0.046	0.046
VELOCITY	(m/s)	**0.351**	**0.607**	**1.378**	**1.378**	**1.378**
REYNOLDS NO.	(-)	119447	157185	236792	236792	236792
FRICTION FACTOR	(-)	0.005	0.005	0.005	0.005	0.005
ΔP / 100m	(kg/cm^2)	**0.005**	**0.018**	**0.140**	**0.140**	**0.140**
STRAIGHT LENGTH	(m)	158	29	29	378	168
NO. OF PIPE ENTRANCE						
NO. OF PIPE EXIT						
NO. OF 90 ELBOW						
NO. OF TEE						
NO. OF GLOBE VALVE						
NO. OF GATE VALVE		3	1	1	1	
NO. OF CHECK VALVE				1		
NO. OF BUTTER VALVE						
NO. OF BALL VALVE						
NO. OF CONTRACT						
NO. OF ENLARGER						
OTHER Ks						
PIPE ΔP	(kg/cm^2)	0.0074	0.0052	0.0403	0.5296	0.2354
FITTING ΔP	(kg/cm^2)	0.0002	0.0002	0.0074	0.0011	0.0000
TOTAL ΔP	(kg/cm^2)	**0.0075**	**0.0054**	**0.0478**	**0.5307**	**0.2354**

NOTES

1. Differential shut off pressure at max impeller size shall be lower than pump differential pressure X 1.25.
   Max suction pressure = Max suction static head + Suction equipment design pressure
2. Two pumps are operating to feed to process unit.
   Three pumps are operating to export to jetty.

PUMP HYDRAULIC CALCULATION SHEET

LOTTE E&C

REV	DATE	BY	CHK'D	APP'D
2	07-Mar-2024	J.H.JUNG	S.K.PARK	C.M.BAE
1	06-Feb-2023	J.H.JUNG	S.K.PARK	C.M.BAE
0	30-Jun-2022	J.H.JUNG	S.K.PARK	C.M.BAE
3	14-Jun-2024	J.H.JUNG	S.K.PARK	C.M.BAE

REVISION

PROJECT	:	LINE PROJECT	JOB NO.	: 15005
CLIENT	:	PT LOTTE CHEMICAL INDONESIA	DOCU. NO.	: LINE-900-BC-4-0001
LOCATION	:	CILEGON, INDONESIA	ITEM NO.	: **90-P-401A/B/C**
UNIT	:	WP5	NO. REQUIRED	: 3 (THREE)
SERVICE	:	**RPG FEED PUMPS**	SHEET	: 5 OF 5

FLUID

LIQUID PUMPED			RPG
OPERATING TEMPERATURE		(℃)	22.7 AMB
VISCOSITY @ OP. TEMP.		(cP)	0.482
VAPOR PRESS. @ OP. TEMP.		(kg/cm2A)	0.318
SP. GR. @ OP. TEMP.		(-)	0.810
NORMAL CAPACITY	(50 t/h)	(m3/hr)	62
EXCESS RATIO		(%)	10
RATED CAPACITY		(m3/hr)	68

SUCTION

PRESS. @ EQUIPMENT	(kg/cm2A)	(kg/cm2G)	
MIN. STATIC HEAD		(m)	
PIPE FRICTION		(kg/cm2)	
		(kg/cm2)	
		(kg/cm2)	
		(kg/cm2)	
NET SUC. PRESS.	(kg/cm2A)	(kg/cm2G)	
NPSH a @ Suction Nozzle Center		(m)	

DISCHARGE

PRESS. @ EQUIP. or BL	(kg/cm2A)	(kg/cm2G)	
STATIC HEAD		(m)	
PIPE FRICTION		(kg/cm2)	
		(kg/cm2)	
		(kg/cm2)	
		(kg/cm2)	
		(kg/cm2)	
		(kg/cm2)	
		(kg/cm2)	
TOTAL DISCH. PRESS.	(kg/cm2A)	(kg/cm2G)	
SUC. PRESS.	(kg/cm2A)	(kg/cm2G)	
DIFF. PRESS. (ΔP)		(kg/cm2)	
TOTAL HEAD (NET)		(m)	
TOTAL HEAD (TAKE)		(m)	
DIFF. PRESS. (ΔP) (TAKE)		(kg/cm2)	
TOTAL DISCH. PRESS. (TAKE)		(kg/cm2G)	

MAX SHUT OFF PRESSURE (NOTE 1)

MAX. SUC. STATIC HEAD		(m)	
SUC. EQUIP. DESIGN PRESS.		(kg/cm2G)	
MAX. SUC. PRESS.		(kg/cm2G)	
DIFF. PRESS. (ΔP) (TAKE)		(kg/cm2)	
SHUTOFF COEFF.		(%)	
MAX. SHUTOFF PRESS.		(kg/cm2G)	

SKETCH

PUMP MINIMUM FLOW LINE

3 OPERATION + 0 STANDBY, TYPE : HORIZONTAL CENTRIFUGAL

MINIMUM FLOWRATE IS VENDOR DATA.

PUMP MINIMUM FLOWRATE =	60	m3/hr	
PUMP DISCH. P. AS PER CURVE =	11.0	kg/cm2g	(1)
SUCTION EQUIPMENT PRESS. =	0.00	kg/cm2g	(2)
SUCTION EQUIPMENT HEAD =	14.5	m	
	1.17	kg/cm2	(3)
PIPE FRICTION =	0.07	kg/cm2	(4)
FE-4002 DEL P =	0.20	kg/cm2	(5)
OTHERS DEL P =		kg/cm2	(6)
OTHERS DEL P =		kg/cm2	(7)
FV-4002 DEL P =	**9.5**	**kg/cm2**	(8)

(8) = (1) - (2) - (3) - (4) - (5) - (6) - (7)

PIPE PRESSURE DROP

PIPING MATERIAL (C.S. or SUS.) : C.S. (1C1P)

		Suction		Discharge			
SECTION				**a**			
FLOW RATE	(m^3/h)			60			
PIPE ID	(in)			6			
PIPE SCH.	(in)			40			
PIPE ID	(mm)			154.05			
ROUGHNESS	(mm)			0.046			
VELOCITY	(m/s)			**0.894**			
REYNOLDS NO.	(-)			231491			
FRICTION FACTOR	(-)			0.004			
ΔP / 100m	(kg/cm^2)			**0.037**			
STRAIGHT LENGTH	(m)			200			
NO. OF PIPE ENTRANCE							
NO. OF PIPE EXIT							
NO. OF 90 ELBOW							
NO. OF TEE							
NO. OF GLOBE VALVE							
NO. OF GATE VALVE							
NO. OF CHECK VALVE							
NO. OF BUTTER VALVE							
NO. OF BALL VALVE							
NO. OF CONTRACT							
NO. OF ENLARGER							
OTHER Ks							
PIPE ΔP	(kg/cm^2)			0.0747			
FITTING ΔP	(kg/cm^2)			0.0000			
TOTAL ΔP	(kg/cm^2)			**0.0747**			

NOTES

1. Differential shut off pressure at max impeller size shall be lower than pump differential pressure X 1.25.
   Max suction pressure = Max suction static head + Suction equipment design pressure
2. Two pumps are operating to feed to process unit.
   Three pumps are operating to export to jetty.

PUMP HYDRAULIC CALCULATION SHEET

LOTTE E&C

REV	DATE	BY	CHK'D	APP'D
2	07-Mar-2024	J.H.JUNG	S.K.PARK	C.M.BAE
1	06-Feb-2023	J.H.JUNG	S.K.PARK	C.M.BAE
0	30-Jun-2022	J.H.JUNG	S.K.PARK	C.M.BAE
3	14-Jun-2024	J.H.JUNG	S.K.PARK	C.M.BAE

REVISION

1	PROJECT :	LINE PROJECT	JOB NO. :	15005
2	CLIENT :	PT LOTTE CHEMICAL INDONESIA	DOCU. NO. :	LINE-900-BC-4-0001
3	LOCATION :	CILEGON, INDONESIA	ITEM NO. :	**90-P-412**
4	UNIT :	WP5	NO. REQUIRED :	1 (ONE)
5	SERVICE :	**C5 EXPORT PUMP**	SHEET :	1 OF 2

6	**FLUID**			
7	LIQUID PUMPED		C5	
8	OPERATING TEMPERATURE	(℃)	22.7	AMB
9	VISCOSITY @ OP. TEMP.	(cP)	0.26	
10	VAPOR PRESS. @ OP. TEMP.	(kg/cm2A)	1.06	
11	SP. GR. @ OP. TEMP.	(-)	0.664	
12				
13	NORMAL CAPACITY (300 t/h)	(m3/hr)	452	
14	EXCESS RATIO	(%)	10	
15	RATED CAPACITY	(m3/hr)	497	
16	**SUCTION**			
17	PRESS. @ EQUIPMENT	(kg/cm2A) (kg/cm2G)	1.06	0.03
18	MIN. STATIC HEAD	(m)	4.7	(NOTE 2)
19	PIPE FRICTION	(kg/cm2)	0.021	
20	STRAINER	(kg/cm2)	0.07	
21		(kg/cm2)		
22		(kg/cm2)		
23				
24	NET SUC. PRESS.	(kg/cm2A) (kg/cm2G)	1.28	0.25
25	NPSH a @ Suction Nozzle Center	(m)	3.3	
26	**DISCHARGE**			
27	PRESS. @ EQUIP. or BL	(kg/cm2A) (kg/cm2G)	1.56	0.53
28	STATIC HEAD	(m)	9.7	
29	PIPE FRICTION	(kg/cm2)	4.243	
30	FE-4007	(kg/cm2)	0.20	
31	FE-4008	(kg/cm2)	0.20	
32	FE-6011	(kg/cm2)	0.20	
33	LOADING ARM ΔP	(kg/cm2)	1.00	
34	MARGIN	(kg/cm2)	0.55	
35		(kg/cm2)		
36		(kg/cm2)		
37				
38	TOTAL DISCH. PRESS.	(kg/cm2A) (kg/cm2G)	8.6	7.6
39	SUC. PRESS.	(kg/cm2A) (kg/cm2G)	1.3	0.2
40	DIFF. PRESS. (ΔP)	(kg/cm2)	7.3	
41	TOTAL HEAD (NET)	(m)	110	
42	TOTAL HEAD (TAKE)	(m)	110	
43	DIFF. PRESS. (ΔP) (TAKE)	(kg/cm2)	7.3	
44	TOTAL DISCH. PRESS. (TAKE)	(kg/cm2G)	7.6	
45				
46				
47				
48	**MAX SHUT OFF PRESSURE (NOTE 1)**			
49	MAX. SUC. STATIC HEAD	(m)	22.5	
50	SUC. EQUIP. DESIGN PRESS.	(kg/cm2G)	3.90	
51	MAX. SUC. PRESS.	(kg/cm2G)	5.4	
52	DIFF. PRESS. (ΔP) (TAKE)	(kg/cm2)	7.30	
53	SHUTOFF COEFF.	(%)	125	
54	MAX. SHUTOFF PRESS.	(kg/cm2G)	14.5	

SKETCH

CASE : EXPORT TO NEW JETTY

1 OPERATION + 0 STANDBY, TYPE : HORIZONTAL CENTRIFUGAL

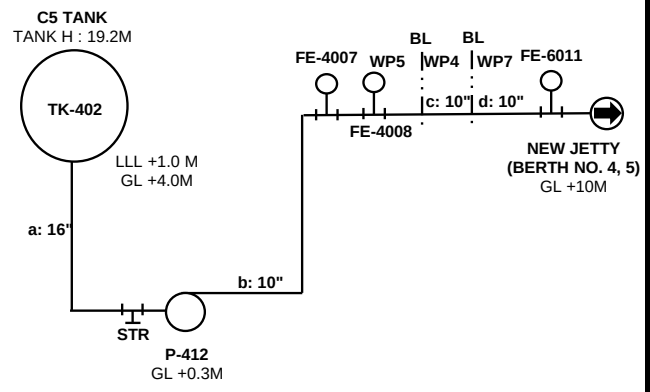

PIPE PRESSURE DROP

PIPING MATERIAL (C.S. or SUS.) : C.S. (1C1P)

		Suction		Discharge		
SECTION		**a**		**b**	**c**	**d**
FLOW RATE	(m^3/h)	497		497	497	497
PIPE ID	(in)	**16**		**10**	**10**	**10**
PIPE SCH.	(in)	STD		40	40	40
PIPE ID	(mm)	387.35		254.51	254.51	254.51
ROUGHNESS	(mm)	0.046		0.046	0.046	0.046
VELOCITY	(m/s)	**1.172**		**2.714**	**2.714**	**2.714**
REYNOLDS NO.	(-)	1158894		1763772	1763772	1763772
FRICTION FACTOR	(-)	0.003		0.004	0.004	0.004
ΔP / 100m	(kg/cm^2)	**0.016**		**0.138**	**0.138**	**0.138**
STRAIGHT LENGTH	(m)	115		319	1032	1692
NO. OF PIPE ENTRANCE						
NO. OF PIPE EXIT						
NO. OF 90 ELBOW						
NO. OF TEE						
NO. OF GLOBE VALVE						
NO. OF GATE VALVE		4		2		4
NO. OF CHECK VALVE				1		1
NO. OF BUTTER VALVE						
NO. OF BALL VALVE						
NO. OF CONTRACT						
NO. OF ENLARGER						
OTHER Ks						
PIPE ΔP	(kg/cm^2)	0.0187		0.4397	1.4215	2.3306
FITTING ΔP	(kg/cm^2)	0.0020		0.0228	0.0000	0.0287
TOTAL ΔP	(kg/cm^2)	**0.0207**		**0.4625**	**1.4215**	**2.3593**

NOTES

1. Differential shut off pressure at max impeller size shall be lower than pump differential pressure X 1.25.
   Max suction pressure = Max suction static head + Suction equipment design pressure
2. LLL is considered for NPSHa.

: SELECTED DATA FOR PUMP DATASHEET

PUMP HYDRAULIC CALCULATION SHEET

LOTTE E&C

REV	DATE	BY	CHK'D	APP'D
2	07-Mar-2024	J.H.JUNG	S.K.PARK	C.M.BAE
1	06-Feb-2023	J.H.JUNG	S.K.PARK	C.M.BAE
0	30-Jun-2022	J.H.JUNG	S.K.PARK	C.M.BAE
3	14-Jun-2024	J.H.JUNG	S.K.PARK	C.M.BAE

REVISION

1	PROJECT :	LINE PROJECT	JOB NO. :	15005
2	CLIENT :	PT LOTTE CHEMICAL INDONESIA	DOCU. NO. :	LINE-900-BC-4-0001
3	LOCATION :	CILEGON, INDONESIA	ITEM NO. :	**90-P-412**
4	UNIT :	WP5	NO. REQUIRED :	1 (ONE)
5	SERVICE :	**C5 EXPORT PUMP**	SHEET :	2 OF 2

	FLUID		
7	LIQUID PUMPED		C5
8	OPERATING TEMPERATURE	(℃)	22.7 AMB
9	VISCOSITY @ OP. TEMP.	(cP)	0.26
10	VAPOR PRESS. @ OP. TEMP.	(kg/cm2A)	1.06
11	SP. GR. @ OP. TEMP.	(-)	0.664
12			
13	NORMAL CAPACITY (300 t/h)	(m3/hr)	452
14	EXCESS RATIO	(%)	10
15	RATED CAPACITY	(m3/hr)	497
16	**SUCTION**		
17	PRESS. @ EQUIPMENT	(kg/cm2A) (kg/cm2G)	
18	MIN. STATIC HEAD	(m)	
19	PIPE FRICTION	(kg/cm2)	
20		(kg/cm2)	
21		(kg/cm2)	
22		(kg/cm2)	
23			
24	NET SUC. PRESS.	(kg/cm2A) (kg/cm2G)	
25	NPSH a @ Suction Nozzle Center	(m)	
26	**DISCHARGE**		
27	PRESS. @ EQUIP. or BL	(kg/cm2A) (kg/cm2G)	
28	STATIC HEAD	(m)	
29	PIPE FRICTION	(kg/cm2)	
30		(kg/cm2)	
31		(kg/cm2)	
32		(kg/cm2)	
33		(kg/cm2)	
34		(kg/cm2)	
35		(kg/cm2)	
36		(kg/cm2)	
37			
38	TOTAL DISCH. PRESS.	(kg/cm2A) (kg/cm2G)	
39	SUC. PRESS.	(kg/cm2A) (kg/cm2G)	
40	DIFF. PRESS. (ΔP)	(kg/cm2)	
41	TOTAL HEAD (NET)	(m)	
42	TOTAL HEAD (TAKE)	(m)	
43	DIFF. PRESS. (ΔP) (TAKE)	(kg/cm2)	
44	TOTAL DISCH. PRESS. (TAKE)	(kg/cm2G)	
45			
46			
47			
48	**MAX SHUT OFF PRESSURE (NOTE 1)**		
49	MAX. SUC. STATIC HEAD	(m)	
50	SUC. EQUIP. DESIGN PRESS.	(kg/cm2G)	
51	MAX. SUC. PRESS.	(kg/cm2G)	
52	DIFF. PRESS. (ΔP) (TAKE)	(kg/cm2)	
53	SHUTOFF COEFF.	(%)	
54	MAX. SHUTOFF PRESS.	(kg/cm2G)	

SKETCH

PUMP MINIMUM FLOW LINE

1 OPERATION + 0 STANDBY, TYPE : HORIZONTAL CENTRIFUGAL

MINIMUM FLOWRATE IS VENDOR DATA.

PUMP MINIMUM FLOWRATE =	140	m3/hr	
PUMP DISCH. P. AS PER CURVE =	8.3	kg/cm2g	(1)
SUCTION EQUIPMENT PRESS. =	0.03	kg/cm2g	(2)
SUCTION EQUIPMENT HEAD =	23.2	m	
	1.54	kg/cm2	(3)
PIPE FRICTION =	0.30	kg/cm2	(4)
FE-4007 DEL P =	0.20	kg/cm2	(5)
OTHERS DEL P =		kg/cm2	(6)
OTHERS DEL P =		kg/cm2	(7)
FV-4007 DEL P =	**6.3**	**kg/cm2**	(8)

(8) = (1) - (2) - (3) - (4) - (5) - (6) - (7)

PIPE PRESSURE DROP

PIPING MATERIAL (C.S. or SUS.) : C.S. (1C1P)

		Suction		Discharge			
SECTION				**a**			
FLOW RATE	(m^3/h)			140			
PIPE ID	(in)			**6**			
PIPE SCH.	(in)			40			
PIPE ID	(mm)			154.05			
ROUGHNESS	(mm)			0.046			
VELOCITY	(m/s)			**2.086**			
REYNOLDS NO.	(-)			820857			
FRICTION FACTOR	(-)			0.004			
ΔP / 100m	(kg/cm^2)			**0.151**			
STRAIGHT LENGTH	(m)			200			
NO. OF PIPE ENTRANCE							
NO. OF PIPE EXIT							
NO. OF 90 ELBOW							
NO. OF TEE							
NO. OF GLOBE VALVE							
NO. OF GATE VALVE							
NO. OF CHECK VALVE							
NO. OF BUTTER VALVE							
NO. OF BALL VALVE							
NO. OF CONTRACT							
NO. OF ENLARGER							
OTHER Ks							
PIPE ΔP	(kg/cm^2)			0.3021			
FITTING ΔP	(kg/cm^2)			0.0000			
TOTAL ΔP	(kg/cm^2)			**0.3021**			

NOTES

1. Differential shut off pressure at max impeller size shall be lower than pump differential pressure X 1.25.
   Max suction pressure = Max suction static head + Suction equipment design pressure

PUMP HYDRAULIC CALCULATION SHEET

LOTTE E&C

REV	DATE	BY	CHK'D	APP'D
2	07-Mar-2024	J.H.JUNG	S.K.PARK	C.M.BAE
1	06-Feb-2023	J.H.JUNG	S.K.PARK	C.M.BAE
0	30-Jun-2022	J.H.JUNG	S.K.PARK	C.M.BAE
3	14-Jun-2024	J.H.JUNG	S.K.PARK	C.M.BAE

REVISION

1	PROJECT :	LINE PROJECT	JOB NO. :	15005
2	CLIENT :	PT LOTTE CHEMICAL INDONESIA	DOCU. NO. :	LINE-900-BC-4-0001
3	LOCATION :	CILEGON, INDONESIA	ITEM NO. :	**90-P-414A/B**
4	UNIT :	WP5	NO. REQUIRED :	2 (TWO)
5	SERVICE :	**GC5C6 EXPORT PUMPS**	SHEET :	1 OF 2

6	**FLUID**			
7	LIQUID PUMPED		GC5C6	
8	OPERATING TEMPERATURE	(℃)	22.7	AMB
9	VISCOSITY @ OP. TEMP.	(cP)	0.26	
10	VAPOR PRESS. @ OP. TEMP.	(kg/cm2A)	0.64	
11	SP. GR. @ OP. TEMP.	(-)	0.681	
12				
13	NORMAL CAPACITY (300 t/h)	(m3/hr)	441	
14	EXCESS RATIO	(%)	10	
15	RATED CAPACITY	(m3/hr)	485	
16	**SUCTION**			
17	PRESS. @ EQUIPMENT	(kg/cm2A) (kg/cm2G)	1.03	0.00
18	MIN. STATIC HEAD	(m)	0.36	(NOTE 2)
19	PIPE FRICTION	(kg/cm2)	0.092	
20	STRAINER	(kg/cm2)	0.07	
21		(kg/cm2)		
22		(kg/cm2)		
23				
24	NET SUC. PRESS.	(kg/cm2A) (kg/cm2G)	0.896	-0.1
25	NPSH a @ Suction Nozzle Center	(m)	3.7	
26	**DISCHARGE**			
27	PRESS. @ EQUIP. or BL	(kg/cm2A) (kg/cm2G)	1.53	0.50
28	STATIC HEAD	(m)	9.7	
29	PIPE FRICTION	(kg/cm2)	6.484	
30	FE-4013	(kg/cm2)	0.20	
31	FE-4014	(kg/cm2)	0.20	
32	FE-6010	(kg/cm2)	0.21	
33	LOADING ARM ΔP	(kg/cm2)	0.95	
34	-	(kg/cm2)		
35		(kg/cm2)		
36		(kg/cm2)		
37				
38	TOTAL DISCH. PRESS.	(kg/cm2A) (kg/cm2G)	10.2	9.2
39	SUC. PRESS.	(kg/cm2A) (kg/cm2G)	0.9	-0.1
40	DIFF. PRESS. (ΔP)	(kg/cm2)	9.3	
41	TOTAL HEAD (NET)	(m)	137	
42	TOTAL HEAD (TAKE)	(m)	137	
43	DIFF. PRESS. (ΔP) (TAKE)	(kg/cm2)	9.3	
44	TOTAL DISCH. PRESS. (TAKE)	(kg/cm2G)	9.2	
45				
46				
47				
48	**MAX SHUT OFF PRESSURE (NOTE 1)**			
49	MAX. SUC. STATIC HEAD	(m)	14.2	
50	SUC. EQUIP. DESIGN PRESS.	(kg/cm2G)	0.015	
51	MAX. SUC. PRESS.	(kg/cm2G)	1.0	
52	DIFF. PRESS. (ΔP) (TAKE)	(kg/cm2)	9.33	
53	SHUTOFF COEFF.	(%)	125	
54	MAX. SHUTOFF PRESS.	(kg/cm2G)	12.6	

SKETCH

CASE : EXPORT TO NEW JETTY

2 OPERATION + 0 STANDBY, TYPE : HORIZONTAL CENTRIFUGAL

*** GC5C6 EXPORT FLOWRATE = 600 T/H

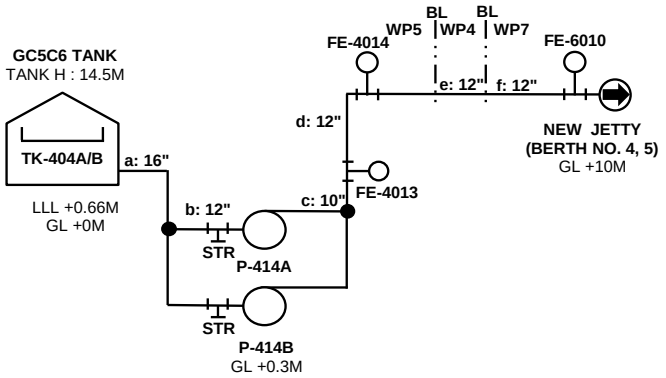

PIPE PRESSURE DROP

PIPING MATERIAL (C.S. or SUS.) : C.S. (1C1P)

		Suction		Discharge			
SECTION		**a**	**b**	**c**	**d**	**e**	**f**
FLOW RATE	(m^3/h)	969	485	485	969	969	969
PIPE ID	(in)	**16**	**12**	**10**	**12**	**12**	**12**
PIPE SCH.	(in)	STD	STD	40	STD	STD	STD
PIPE ID	(mm)	387.35	304.80	254.51	304.80	304.80	304.80
ROUGHNESS	(mm)	0.046	0.046	0.046	0.046	0.046	0.046
VELOCITY	(m/s)	**2.284**	**1.845**	**2.646**	**3.689**	**3.689**	**3.689**
REYNOLDS NO.	(-)	2317637	1472665	1763657	2945330	2945330	2945330
FRICTION FACTOR	(-)	0.003	0.003	0.004	0.003	0.003	0.003
ΔP / 100m	(kg/cm^2)	**0.061**	**0.053**	**0.134**	**0.208**	**0.208**	**0.208**
STRAIGHT LENGTH	(m)	86	60	26	343	1032	1692
NO. OF PIPE ENTRANCE							
NO. OF PIPE EXIT							
NO. OF 90 ELBOW							
NO. OF TEE							
NO. OF GLOBE VALVE							
NO. OF GATE VALVE		3	1	1			4
NO. OF CHECK VALVE				1			1
NO. OF BUTTER VALVE							
NO. OF BALL VALVE							
NO. OF CONTRACT							
NO. OF ENLARGER							
OTHER Ks							
PIPE ΔP	(kg/cm^2)	0.0526	0.0321	0.0355	0.7135	2.1453	3.5174
FITTING ΔP	(kg/cm^2)	0.0059	0.0013	0.0194	0.0000	0.0000	0.0527
TOTAL ΔP	(kg/cm^2)	**0.0585**	**0.0334**	**0.0549**	**0.7135**	**2.1453**	**3.5700**

NOTES

1. Differential shut off pressure at max impeller size shall be lower than pump differential pressure X 1.25.
   Max suction pressure = Max suction static head + Suction equipment design pressure
2. LLL considered for NPSHa.

: SELECTED DATA FOR PUMP DATASHEET

PUMP HYDRAULIC CALCULATION SHEET

LOTTE E&C

REV	DATE	BY	CHK'D	APP'D
2	07-Mar-2024	J.H.JUNG	S.K.PARK	C.M.BAE
1	06-Feb-2023	J.H.JUNG	S.K.PARK	C.M.BAE
0	30-Jun-2022	J.H.JUNG	S.K.PARK	C.M.BAE
3	14-Jun-2024	J.H.JUNG	S.K.PARK	C.M.BAE

REVISION

PROJECT	:	LINE PROJECT	JOB NO.	: 15005
CLIENT	:	PT LOTTE CHEMICAL INDONESIA	DOCU. NO.	: LINE-900-BC-4-0001
LOCATION	:	CILEGON, INDONESIA	ITEM NO.	: **90-P-414A/B**
UNIT	:	WP5	NO. REQUIRED	: 2 (TWO)
SERVICE	:	**GC5C6 EXPORT PUMPS**	SHEET	: 2 OF 2

FLUID

LIQUID PUMPED		GC5C6
OPERATING TEMPERATURE	(℃)	22.7 AMB
VISCOSITY @ OP. TEMP.	(cP)	0.26
VAPOR PRESS. @ OP. TEMP.	(kg/cm2A)	0.64
SP. GR. @ OP. TEMP.	(-)	0.681
NORMAL CAPACITY (300 t/h)	(m3/hr)	441
EXCESS RATIO	(%)	10
RATED CAPACITY	(m3/hr)	485

SUCTION

PRESS. @ EQUIPMENT	(kg/cm2A) (kg/cm2G)	
MIN. STATIC HEAD	(m)	
PIPE FRICTION	(kg/cm2)	
	(kg/cm2)	
	(kg/cm2)	
	(kg/cm2)	
NET SUC. PRESS.	(kg/cm2A) (kg/cm2G)	
NPSH a @ Suction Nozzle Center	(m)	

DISCHARGE

PRESS. @ EQUIP. or BL	(kg/cm2A) (kg/cm2G)	
STATIC HEAD	(m)	
PIPE FRICTION	(kg/cm2)	
	(kg/cm2)	
	(kg/cm2)	
	(kg/cm2)	
	(kg/cm2)	
	(kg/cm2)	
	(kg/cm2)	
TOTAL DISCH. PRESS.	(kg/cm2A) (kg/cm2G)	
SUC. PRESS.	(kg/cm2A) (kg/cm2G)	
DIFF. PRESS. (ΔP)	(kg/cm2)	
TOTAL HEAD (NET)	(m)	
TOTAL HEAD (TAKE)	(m)	
DIFF. PRESS. (ΔP) (TAKE)	(kg/cm2)	
TOTAL DISCH. PRESS. (TAKE)	(kg/cm2G)	

MAX SHUT OFF PRESSURE (NOTE 1)

MAX. SUC. STATIC HEAD	(m)	
SUC. EQUIP. DESIGN PRESS.	(kg/cm2G)	
MAX. SUC. PRESS.	(kg/cm2G)	
DIFF. PRESS. (ΔP) (TAKE)	(kg/cm2)	
SHUTOFF COEFF.	(%)	
MAX. SHUTOFF PRESS.	(kg/cm2G)	

SKETCH

PUMP MINIMUM FLOW LINE - GC5C6

2 OPERATION + 0 STANDBY, TYPE : HORIZONTAL CENTRIFUGAL

MINIMUM FLOWRATE IS VENDOR DATA.

PUMP MINIMUM FLOWRATE =	480	m3/hr	
PUMP DISCH. P. AS PER CURVE =	9.9	kg/cm2g	(1)
SUCTION EQUIPMENT PRESS. =	0.00	kg/cm2g	(2)
SUCTION EQUIPMENT HEAD =	14.5	m	
	0.99	kg/cm2	(3)
PIPE FRICTION =	0.85	kg/cm2	(4)
FE-4013 DEL P =	0.20	kg/cm2	(5)
JET NOZZLE TIP DEL P =	0.41	kg/cm2	(6)
OTHERS DEL P =		kg/cm2	(7)
FV-4013 DEL P =	**7.5**	**kg/cm2**	(8)

(8) = (1) - (2) - (3) - (4) - (5) - (6) - (7)

PIPE PRESSURE DROP

PIPING MATERIAL (C.S. or SUS.) : C.S. (1C1P)

		Suction		Discharge			
SECTION				**a**			
FLOW RATE	(m^3/h)			480			
PIPE ID	(in)			8			
PIPE SCH.	(in)			40			
PIPE ID	(mm)			202.72			
ROUGHNESS	(mm)			0.046			
VELOCITY	(m/s)			**4.131**			
REYNOLDS NO.	(-)			2193436			
FRICTION FACTOR	(-)			0.004			
ΔP / 100m	(kg/cm^2)			**0.424**			
STRAIGHT LENGTH	(m)			200			
NO. OF PIPE ENTRANCE							
NO. OF PIPE EXIT							
NO. OF 90 ELBOW							
NO. OF TEE							
NO. OF GLOBE VALVE							
NO. OF GATE VALVE							
NO. OF CHECK VALVE							
NO. OF BUTTER VALVE							
NO. OF BALL VALVE							
NO. OF CONTRACT							
NO. OF ENLARGER							
OTHER Ks							
PIPE ΔP	(kg/cm^2)			0.8483			
FITTING ΔP	(kg/cm^2)			0.0000			
TOTAL ΔP	(kg/cm^2)			**0.8483**			

NOTES

1. Differential shut off pressure at max impeller size shall be lower than pump differential pressure X 1.25.
   Max suction pressure = Max suction static head + Suction equipment design pressure

PUMP HYDRAULIC CALCULATION SHEET

LOTTE E&C

REV	DATE	BY	CHK'D	APP'D
2	07-Mar-2024	J.H.JUNG	S.K.PARK	C.M.BAE
1	06-Feb-2023	J.H.JUNG	S.K.PARK	C.M.BAE
0	30-Jun-2022	J.H.JUNG	S.K.PARK	C.M.BAE
3	14-Jun-2024	J.H.JUNG	S.K.PARK	C.M.BAE

REVISION

1	PROJECT :	LINE PROJECT	JOB NO. :	15005
2	CLIENT :	PT LOTTE CHEMICAL INDONESIA	DOCU. NO. :	LINE-900-BC-4-0001
3	LOCATION :	CILEGON, INDONESIA	ITEM NO. :	**90-P-415A/B**
4	UNIT :	WP5	NO. REQUIRED :	2 (TWO)
5	SERVICE :	**BENZENE EXPORT PUMPS**	SHEET :	1 OF 2

6	**FLUID**			
7	LIQUID PUMPED		Benzene	
8	OPERATING TEMPERATURE	(℃)	22.7	AMB
9	VISCOSITY @ OP. TEMP.	(cP)	0.623	
10	VAPOR PRESS. @ OP. TEMP.	(kg/cm2A)	0.118	
11	SP. GR. @ OP. TEMP.	(-)	0.872	
12				
13	NORMAL CAPACITY (300 t/h)	(m3/hr)	344	
14	EXCESS RATIO	(%)	10	
15	RATED CAPACITY	(m3/hr)	378	
16	**SUCTION**			
17	PRESS. @ EQUIPMENT	(kg/cm2A) (kg/cm2G)	1.03	0.00
18	MIN. STATIC HEAD	(m)	0.00	(NOTE 4)
19	PIPE FRICTION	(kg/cm2)	0.114	
20	STRAINER	(kg/cm2)	0.07	
21		(kg/cm2)		
22		(kg/cm2)		
23				
24	NET SUC. PRESS.	(kg/cm2A) (kg/cm2G)	0.85	-0.2
25	NPSH a @ Suction Nozzle Center	(m)	8.4	
26	**DISCHARGE**			
27	PRESS. @ EQUIP. or BL	(kg/cm2A) (kg/cm2G)	1.53	0.50
28	STATIC HEAD	(m)	9.7	
29	PIPE FRICTION	(kg/cm2)	5.357	
30	FE-4016	(kg/cm2)	0.175	
31	FE-4017	(kg/cm2)	0.175	
32	FE-6013	(kg/cm2)	0.182	
33	LOADING ARM ΔP	(kg/cm2)	0.80	
34		(kg/cm2)		
35		(kg/cm2)		
36		(kg/cm2)		
37				
38	TOTAL DISCH. PRESS.	(kg/cm2A) (kg/cm2G)	9.1	8.0
39	SUC. PRESS.	(kg/cm2A) (kg/cm2G)	0.8	-0.2
40	DIFF. PRESS. (ΔP)	(kg/cm2)	8.2	
41	TOTAL HEAD (NET)	(m)	94	
42	TOTAL HEAD (TAKE)	(m)	94	
43	DIFF. PRESS. (ΔP) (TAKE)	(kg/cm2)	8.2	
44	TOTAL DISCH. PRESS. (TAKE)	(kg/cm2G)	8.0	
45				
46				
47				
48	**MAX SHUT OFF PRESSURE (NOTE 1)**			
49	MAX. SUC. STATIC HEAD	(m)	14.2	
50	SUC. EQUIP. DESIGN PRESS.	(kg/cm2G)	0.015	
51	MAX. SUC. PRESS.	(kg/cm2G)	1.3	
52	DIFF. PRESS. (ΔP) (TAKE)	(kg/cm2)	9.0	
53	SHUTOFF COEFF.	(%)		
54	MAX. SHUTOFF PRESS.	(kg/cm2G)	10.3	(NOTE 3)

SKETCH

CASE : EXPORT TO NEW JETTY

2 OPERATION + 0 STANDBY, TYPE : HORIZONTAL CENTRIFUGAL

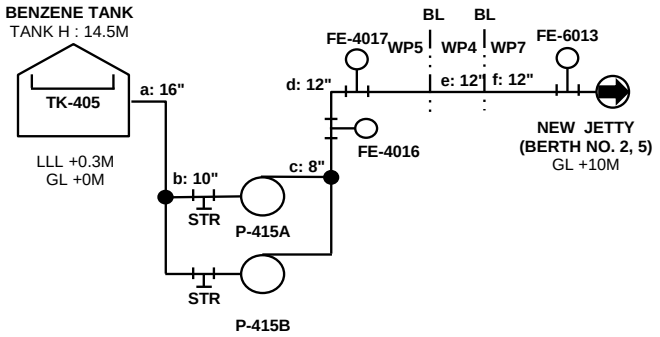

PIPE PRESSURE DROP

PIPING MATERIAL (C.S. or SUS.) : C.S. (1C1P1)

		Suction		Discharge			
SECTION		**a**	**b**	**c**	**d**	**e**	**f**
FLOW RATE	(m^3/h)	757	378	378	757	757	757
PIPE ID	(in)	**16**	**10**	**8**	**12**	**12**	**12**
PIPE SCH.	(in)	STD	40	40	STD	STD	STD
PIPE ID	(mm)	387.35	254.51	202.72	304.80	304.80	304.80
ROUGHNESS	(mm)	0.046	0.046	0.046	0.046	0.046	0.046
VELOCITY	(m/s)	**1.784**	**2.066**	**3.257**	**2.881**	**2.881**	**2.881**
REYNOLDS NO.	(-)	967192	736006	924037	1229140	1229140	1229140
FRICTION FACTOR	(-)	0.003	0.004	0.004	0.003	0.003	0.003
ΔP / 100m	(kg/cm^2)	**0.050**	**0.110**	**0.350**	**0.169**	**0.169**	**0.169**
STRAIGHT LENGTH	(m)	182	14	14	372	1032	1692
NO. OF PIPE ENTRANCE							
NO. OF PIPE EXIT							
NO. OF 90 ELBOW							
NO. OF TEE							
NO. OF GLOBE VALVE							
NO. OF GATE VALVE		3	1	1	1		4
NO. OF CHECK VALVE				1			1
NO. OF BUTTER VALVE							
NO. OF BALL VALVE							
NO. OF CONTRACT							
NO. OF ENLARGER							
OTHER Ks							
PIPE ΔP	(kg/cm^2)	0.0912	0.0159	0.0503	0.6275	1.7407	2.8540
FITTING ΔP	(kg/cm^2)	0.0046	0.0022	0.0392	0.0042	0.0000	0.0411
TOTAL ΔP	(kg/cm^2)	**0.0959**	**0.0181**	**0.0896**	**0.6317**	**1.7407**	**2.8951**

NOTES

1. Differential shut off pressure at max impeller size shall be lower than pump differential pressure X 1.25.
   Max suction pressure = Max suction static head + Suction equipment design pressure
   For this pump, Max shut off pressure is calculated as below;
   Differential shut off pressure = vendor shut off head (103.7m)
2. No feed to process
3. Downstream design pressure is applied as 11.3 kg/cm2g.
4. LLL is considered for NPSHa.

: SELECTED DATA FOR PUMP DATASHEET

PUMP HYDRAULIC CALCULATION SHEET

LOTTE E&C

REV	DATE	BY	CHK'D	APP'D
2	07-Mar-2024	J.H.JUNG	S.K.PARK	C.M.BAE
1	06-Feb-2023	J.H.JUNG	S.K.PARK	C.M.BAE
0	30-Jun-2022	J.H.JUNG	S.K.PARK	C.M.BAE
3	14-Jun-2024	J.H.JUNG	S.K.PARK	C.M.BAE

REVISION

1	PROJECT :	LINE PROJECT	JOB NO. :	15005
2	CLIENT :	PT LOTTE CHEMICAL INDONESIA	DOCU. NO. :	LINE-900-BC-4-0001
3	LOCATION :	CILEGON, INDONESIA	ITEM NO. :	**90-P-415A/B**
4	UNIT :	WP5	NO. REQUIRED :	2 (TWO)
5	SERVICE :	**BENZENE EXPORT PUMPS**	SHEET :	2 OF 2

6	**FLUID**		
7	LIQUID PUMPED		Benzene
8	OPERATING TEMPERATURE	(℃)	22.7 AMB
9	VISCOSITY @ OP. TEMP.	(cP)	0.623
10	VAPOR PRESS. @ OP. TEMP.	(kg/cm2A)	0.118
11	SP. GR. @ OP. TEMP.	(-)	0.872
12			
13	NORMAL CAPACITY (300 t/h)	(m3/hr)	344
14	EXCESS RATIO	(%)	10
15	RATED CAPACITY	(m3/hr)	378
16	**SUCTION**		
17	PRESS. @ EQUIPMENT	(kg/cm2A) (kg/cm2G)	
18	MIN. STATIC HEAD	(m)	
19	PIPE FRICTION	(kg/cm2)	
20		(kg/cm2)	
21		(kg/cm2)	
22		(kg/cm2)	
23			
24	NET SUC. PRESS.	(kg/cm2A) (kg/cm2G)	
25	NPSH a @ Suction Nozzle Center	(m)	
26	**DISCHARGE**		
27	PRESS. @ EQUIP. or BL	(kg/cm2A) (kg/cm2G)	
28	STATIC HEAD	(m)	
29	PIPE FRICTION	(kg/cm2)	
30		(kg/cm2)	
31		(kg/cm2)	
32		(kg/cm2)	
33		(kg/cm2)	
34		(kg/cm2)	
35		(kg/cm2)	
36		(kg/cm2)	
37			
38	TOTAL DISCH. PRESS.	(kg/cm2A) (kg/cm2G)	
39	SUC. PRESS.	(kg/cm2A) (kg/cm2G)	
40	DIFF. PRESS. (ΔP)	(kg/cm2)	
41	TOTAL HEAD (NET)	(m)	
42	TOTAL HEAD (TAKE)	(m)	
43	DIFF. PRESS. (ΔP) (TAKE)	(kg/cm2)	
44	TOTAL DISCH. PRESS. (TAKE)	(kg/cm2G)	
45			
46			
47			
48	**MAX SHUT OFF PRESSURE (NOTE 1)**		
49	MAX. SUC. STATIC HEAD	(m)	
50	SUC. EQUIP. DESIGN PRESS.	(kg/cm2G)	
51	MAX. SUC. PRESS.	(kg/cm2G)	
52	DIFF. PRESS. (ΔP) (TAKE)	(kg/cm2)	
53	SHUTOFF COEFF.	(%)	
54	MAX. SHUTOFF PRESS.	(kg/cm2G)	

SKETCH

PUMP MINIMUM FLOW LINE

2 OPERATION + 0 STANDBY, TYPE : HORIZONTAL CENTRIFUGAL

MINIMUM FLOWRATE IS VENDOR DATA.

PUMP MINIMUM FLOWRATE =	340	m3/hr	
PUMP DISCH. P. AS PER CURVE =	8.8	kg/cm2g	(1)
SUCTION EQUIPMENT PRESS. =	0.00	kg/cm2g	(2)
SUCTION EQUIPMENT HEAD =	14.5	m	
	1.26	kg/cm2	(3)
PIPE FRICTION =	0.57	kg/cm2	(4)
FE-4016 DEL P =	0.175	kg/cm2	(5)
OTHERS DEL P =		kg/cm2	(6)
OTHERS DEL P =		kg/cm2	(7)
FV-4016 DEL P =	**6.8**	**kg/cm2**	(8)

(8) = (1) - (2) - (3) - (4) - (5) - (6) - (7)

PIPE PRESSURE DROP

PIPING MATERIAL (C.S. or SUS.) : C.S. (1C1P1)

		Suction		Discharge			
SECTION				**a**			
FLOW RATE	(m^3/h)			340			
PIPE ID	(in)			8			
PIPE SCH.	(in)			40			
PIPE ID	(mm)			202.72			
ROUGHNESS	(mm)			0.046			
VELOCITY	(m/s)			**2.926**			
REYNOLDS NO.	(-)			830266			
FRICTION FACTOR	(-)			0.004			
ΔP / 100m	(kg/cm^2)			**0.284**			
STRAIGHT LENGTH	(m)			200			
NO. OF PIPE ENTRANCE							
NO. OF PIPE EXIT							
NO. OF 90 ELBOW							
NO. OF TEE							
NO. OF GLOBE VALVE							
NO. OF GATE VALVE							
NO. OF CHECK VALVE							
NO. OF BUTTER VALVE							
NO. OF BALL VALVE							
NO. OF CONTRACT							
NO. OF ENLARGER							
OTHER Ks							
PIPE ΔP	(kg/cm^2)			0.5678			
FITTING ΔP	(kg/cm^2)			0.0000			
TOTAL ΔP	(kg/cm^2)			**0.5678**			

NOTES

1. Differential shut off pressure at max impeller size shall be lower than pump differential pressure X 1.25.
   Max suction pressure = Max suction static head + Suction equipment design pressure

PUMP HYDRAULIC CALCULATION SHEET

LOTTE E&C

REV	DATE	BY	CHK'D	APP'D
2	07-Mar-2024	J.H.JUNG	S.K.PARK	C.M.BAE
1	06-Feb-2023	J.H.JUNG	S.K.PARK	C.M.BAE
0	30-Jun-2022	J.H.JUNG	S.K.PARK	C.M.BAE
3	14-Jun-2024	J.H.JUNG	S.K.PARK	C.M.BAE

REVISION

1	PROJECT :	LINE PROJECT	JOB NO. :	15005
2	CLIENT :	PT LOTTE CHEMICAL INDONESIA	DOCU. NO. :	LINE-900-BC-4-0001
3	LOCATION :	CILEGON, INDONESIA	ITEM NO. :	**90-P-416A/B**
4	UNIT :	WP5	NO. REQUIRED :	2 (TWO)
5	SERVICE :	**TOLUENE EXPORT PUMPS**	SHEET :	1 OF 2

6	**FLUID**			
7	LIQUID PUMPED		Toluene	
8	OPERATING TEMPERATURE	(℃)	22.7	AMB
9	VISCOSITY @ OP. TEMP.	(cP)	0.562	
10	VAPOR PRESS. @ OP. TEMP.	(kg/cm2A)	0.034	
11	SP. GR. @ OP. TEMP.	(-)	0.866	
12				
13	NORMAL CAPACITY (125 t/h)	(m3/hr)	144	
14	EXCESS RATIO	(%)	10	
15	RATED CAPACITY	(m3/hr)	159	
16	**SUCTION**			
17	PRESS. @ EQUIPMENT	(kg/cm2A) (kg/cm2G)	1.03	0.00
18	MIN. STATIC HEAD	(m)	-0.30	
19	PIPE FRICTION	(kg/cm2)	0.125	
20	STRAINER	(kg/cm2)	0.07	
21		(kg/cm2)		
22		(kg/cm2)		
23				
24	NET SUC. PRESS.	(kg/cm2A) (kg/cm2G)	0.81	-0.2
25	NPSH a @ Suction Nozzle Center	(m)	9.0	
26	**DISCHARGE**			
27	PRESS. @ EQUIP. or BL	(kg/cm2A) (kg/cm2G)	1.53	0.50
28	STATIC HEAD	(m)	9.7	
29	PIPE FRICTION	(kg/cm2)	6.619	
30	FE-4019	(kg/cm2)	0.20	
31	FE-4020	(kg/cm2)	0.20	
32	FE-6014	(kg/cm2)	0.20	
33	LOADING ARM ΔP	(kg/cm2)	0.35	
34	MARGIN	(kg/cm2)	0.15	
35		(kg/cm2)		
36		(kg/cm2)		
37				
38	TOTAL DISCH. PRESS.	(kg/cm2A) (kg/cm2G)	10.1	9.1
39	SUC. PRESS.	(kg/cm2A) (kg/cm2G)	0.8	-0.2
40	DIFF. PRESS. (ΔP)	(kg/cm2)	9.3	
41	TOTAL HEAD (NET)	(m)	107	
42	TOTAL HEAD (TAKE)	(m)	107	
43	DIFF. PRESS. (ΔP) (TAKE)	(kg/cm2)	9.3	
44	TOTAL DISCH. PRESS. (TAKE)	(kg/cm2G)	9.1	
45				
46				
47				
48	**MAX SHUT OFF PRESSURE (NOTE 1)**			
49	MAX. SUC. STATIC HEAD	(m)	14.2	
50	SUC. EQUIP. DESIGN PRESS.	(kg/cm2G)	0.015	
51	MAX. SUC. PRESS.	(kg/cm2G)	1.2	
52	DIFF. PRESS. (ΔP) (TAKE)	(kg/cm2)	9.30	
53	SHUTOFF COEFF.	(%)	125	
54	MAX. SHUTOFF PRESS.	(kg/cm2G)	12.8	

SKETCH

CASE 1 : EXPORT TO NEW JETTY

2 OPERATION + 0 STANDBY, TYPE : HORIZONTAL CENTRIFUGAL

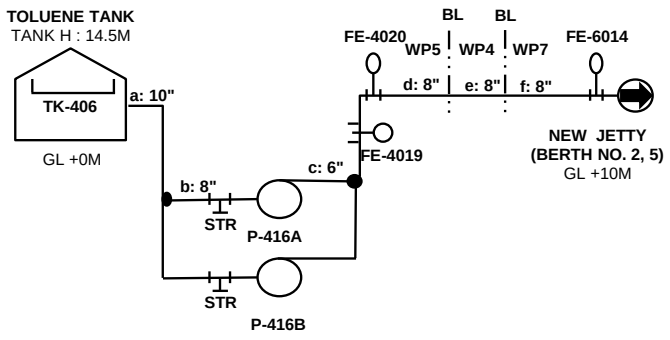

PIPE PRESSURE DROP

PIPING MATERIAL (C.S. or SUS.) : C.S. (1C1P)

		Suction		Discharge			
SECTION		**a**	**b**	**c**	**d**	**e**	**f**
FLOW RATE	(m^3/h)	317	159	159	317	317	317
PIPE ID	(in)	**10**	**8**	**6**	**8**	**8**	**8**
PIPE SCH.	(in)	40	40	40	40	40	40
PIPE ID	(mm)	254.51	202.72	154.05	202.72	202.72	202.72
ROUGHNESS	(mm)	0.046	0.046	0.046	0.046	0.046	0.046
VELOCITY	(m/s)	**1.733**	**1.366**	**2.366**	**2.732**	**2.732**	**2.732**
REYNOLDS NO.	(-)	679786	426727	561546	853455	853455	853455
FRICTION FACTOR	(-)	0.004	0.004	0.004	0.004	0.004	0.004
ΔP / 100m	(kg/cm^2)	**0.077**	**0.065**	**0.259**	**0.245**	**0.245**	**0.245**
STRAIGHT LENGTH	(m)	137	20	14	353	1032	1272
NO. OF PIPE ENTRANCE							
NO. OF PIPE EXIT							
NO. OF 90 ELBOW							
NO. OF TEE							
NO. OF GLOBE VALVE							
NO. OF GATE VALVE		3	1	1			4
NO. OF CHECK VALVE				1			1
NO. OF BUTTER VALVE							
NO. OF BALL VALVE							
NO. OF CONTRACT							
NO. OF ENLARGER							
OTHER Ks							
PIPE ΔP	(kg/cm^2)	0.1063	0.0129	0.0373	0.8659	2.5328	3.1218
FITTING ΔP	(kg/cm^2)	0.0047	0.0010	0.0217	0.0000	0.0000	0.0394
TOTAL ΔP	(kg/cm^2)	**0.1109**	**0.0139**	**0.0589**	**0.8659**	**2.5328**	**3.1612**

NOTES

1. Differential shut off pressure at max impeller size shall be lower than pump differential pressure X 1.25.
   Max suction pressure = Max suction static head + Suction equipment design pressure

: SELECTED DATA FOR PUMP DATASHEET

PUMP HYDRAULIC CALCULATION SHEET

LOTTE E&C

REV	DATE	BY	CHK'D	APP'D
2	07-Mar-2024	J.H.JUNG	S.K.PARK	C.M.BAE
1	06-Feb-2023	J.H.JUNG	S.K.PARK	C.M.BAE
0	30-Jun-2022	J.H.JUNG	S.K.PARK	C.M.BAE
3	14-Jun-2024	J.H.JUNG	S.K.PARK	C.M.BAE

REVISION

1	PROJECT :	LINE PROJECT	JOB NO. :	15005
2	CLIENT :	PT LOTTE CHEMICAL INDONESIA	DOCU. NO. :	LINE-900-BC-4-0001
3	LOCATION :	CILEGON, INDONESIA	ITEM NO. :	**90-P-416A/B**
4	UNIT :	WP5	NO. REQUIRED :	2 (TWO)
5	SERVICE :	**TOLUENE EXPORT PUMPS**	SHEET :	2 OF 3

	FLUID				
7	LIQUID PUMPED			Toluene	
8	OPERATING TEMPERATURE		(℃)	22.7	AMB
9	VISCOSITY @ OP. TEMP.		(cP)	0.562	
10	VAPOR PRESS. @ OP. TEMP.		(kg/cm2A)	0.034	
11	SP. GR. @ OP. TEMP.		(-)	0.866	
12					
13	NORMAL CAPACITY	(125 t/h)	(m3/hr)	53	
14	EXCESS RATIO		(%)	0	
15	RATED CAPACITY		(m3/hr)	53	
16	**SUCTION**				
17	PRESS. @ EQUIPMENT	(kg/cm2A)	(kg/cm2G)	1.03	0.00
18	MIN. STATIC HEAD		(m)	-0.30	
19	PIPE FRICTION		(kg/cm2)	0.006	
20	STRAINER		(kg/cm2)	0.07	
21			(kg/cm2)		
22			(kg/cm2)		
23					
24	NET SUC. PRESS.	(kg/cm2A)	(kg/cm2G)	0.93	-0.1
25	NPSH a @ Suction Nozzle Center		(m)	10.4	
26	**DISCHARGE**				
27	PRESS. @ EQUIP. or BL	(kg/cm2A)	(kg/cm2G)	1.53	0.50
28	STATIC HEAD		(m)	3.0	
29	PIPE FRICTION		(kg/cm2)	0.744	
30	FE-4019		(kg/cm2)	0.20	
31	RO-4001		(kg/cm2)	6.00	
32	LOADING ARM ΔP		(kg/cm2)	1.00	
33	MARGIN (GLOBE VALVE)		(kg/cm2)	0.50	
34			(kg/cm2)		
35			(kg/cm2)		
36			(kg/cm2)		
37					
38	TOTAL DISCH. PRESS.	(kg/cm2A)	(kg/cm2G)	10.2	9.2
39	SUC. PRESS.	(kg/cm2A)	(kg/cm2G)	0.9	-0.1
40	DIFF. PRESS. (ΔP)		(kg/cm2)	9.3	
41	TOTAL HEAD (NET)		(m)	107	
42	TOTAL HEAD (TAKE)		(m)	107	
43	DIFF. PRESS. (ΔP) (TAKE)		(kg/cm2)	9.3	
44	TOTAL DISCH. PRESS. (TAKE)		(kg/cm2G)	9.2	
45					
46					
47					
48	**MAX SHUT OFF PRESSURE (NOTE 1)**				
49	MAX. SUC. STATIC HEAD		(m)		
50	SUC. EQUIP. DESIGN PRESS.		(kg/cm2G)		
51	MAX. SUC. PRESS.		(kg/cm2G)		
52	DIFF. PRESS. (ΔP) (TAKE)		(kg/cm2)		
53	SHUTOFF COEFF.		(%)		
54	MAX. SHUTOFF PRESS.		(kg/cm2G)		

SKETCH

CASE 2 : TOLUENE TO TRUCK LOADING ARM

1 OPERATION + 1 STANDBY, TYPE : HORIZONTAL CENTRIFUGAL

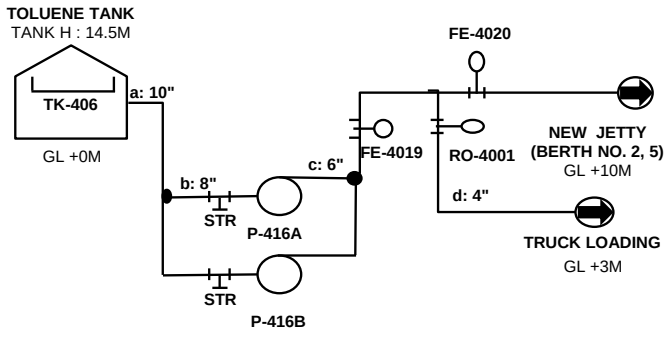

PIPE PRESSURE DROP

PIPING MATERIAL (C.S. or SUS.) : C.S. (1C1P)

		Suction		Discharge			
SECTION		**a**	**b**	**c**	**d**	**e**	**f**
FLOW RATE	(m^3/h)	53	53	53	48		
PIPE ID	(in)	**10**	**8**	**6**	**4**		
PIPE SCH.	(in)	40	40	40	40		
PIPE ID	(mm)	254.51	202.72	154.05	102.26		
ROUGHNESS	(mm)	0.046	0.046	0.046	0.046		
VELOCITY	(m/s)	**0.289**	**0.456**	**0.790**	**1.623**		
REYNOLDS NO.	(-)	113490	142484	187500	255814		
FRICTION FACTOR	(-)	0.005	0.005	0.004	0.005		
ΔP / 100m	(kg/cm^2)	**0.003**	**0.008**	**0.032**	**0.207**		
STRAIGNT LENGTH	(m)	137	20	14	324		
NO. OF PIPE ENTRANCE							
NO. OF PIPE EXIT							
NO. OF 90 ELBOW							
NO. OF TEE							
NO. OF GLOBE VALVE					1		
NO. OF GATE VALVE		3	1	1			
NO. OF CHECK VALVE				1			
NO. OF BUTTER VALVE							
NO. OF BALL VALVE							
NO. OF CONTRACT							
NO. OF ENLARGER							
OTHER Ks							
PIPE ΔP	(kg/cm^2)	0.0037	0.0016	0.0046	0.6692		
FiITTING ΔP	(kg/cm^2)	0.0001	0.0001	0.0024	0.0676		
TOTAL ΔP	(kg/cm^2)	**0.0038**	**0.0018**	**0.0070**	**0.7368**		

NOTES

1. Differential shut off pressure at max impeller size shall be lower than pump differential pressure X 1.25.
   Max suction pressure = Max suction static head + Suction equipment design pressure

PUMP HYDRAULIC CALCULATION SHEET

LOTTE E&C

REV	DATE	BY	CHK'D	APP'D
2	07-Mar-2024	J.H.JUNG	S.K.PARK	C.M.BAE
1	06-Feb-2023	J.H.JUNG	S.K.PARK	C.M.BAE
0	30-Jun-2022	J.H.JUNG	S.K.PARK	C.M.BAE
3	14-Jun-2024	J.H.JUNG	S.K.PARK	C.M.BAE

REVISION

1	PROJECT :	LINE PROJECT	JOB NO. :	15005
2	CLIENT :	PT LOTTE CHEMICAL INDONESIA	DOCU. NO. :	LINE-900-BC-4-0001
3	LOCATION :	CILEGON, INDONESIA	ITEM NO. :	**90-P-416A/B**
4	UNIT :	WP5	NO. REQUIRED :	2 (TWO)
5	SERVICE :	**TOLUENE EXPORT PUMPS**	SHEET :	2 OF 2

6	**FLUID**		
7	LIQUID PUMPED		Toluene
8	OPERATING TEMPERATURE	(℃)	22.7 AMB
9	VISCOSITY @ OP. TEMP.	(cP)	0.562
10	VAPOR PRESS. @ OP. TEMP.	(kg/cm2A)	0.034
11	SP. GR. @ OP. TEMP.	(-)	0.866
12			
13	NORMAL CAPACITY (125 t/h)	(m3/hr)	144
14	EXCESS RATIO	(%)	10
15	RATED CAPACITY	(m3/hr)	159
16	**SUCTION**		
17	PRESS. @ EQUIPMENT	(kg/cm2A) (kg/cm2G)	
18	MIN. STATIC HEAD	(m)	
19	PIPE FRICTION	(kg/cm2)	
20		(kg/cm2)	
21		(kg/cm2)	
22		(kg/cm2)	
23			
24	NET SUC. PRESS.	(kg/cm2A) (kg/cm2G)	
25	NPSH a @ Suction Nozzle Center	(m)	
26	**DISCHARGE**		
27	PRESS. @ EQUIP. or BL	(kg/cm2A) (kg/cm2G)	
28	STATIC HEAD	(m)	
29	PIPE FRICTION	(kg/cm2)	
30		(kg/cm2)	
31		(kg/cm2)	
32		(kg/cm2)	
33		(kg/cm2)	
34		(kg/cm2)	
35		(kg/cm2)	
36		(kg/cm2)	
37			
38	TOTAL DISCH. PRESS.	(kg/cm2A) (kg/cm2G)	
39	SUC. PRESS.	(kg/cm2A) (kg/cm2G)	
40	DIFF. PRESS. (ΔP)	(kg/cm2)	
41	TOTAL HEAD (NET)	(m)	
42	TOTAL HEAD (TAKE)	(m)	
43	DIFF. PRESS. (ΔP) (TAKE)	(kg/cm2)	
44	TOTAL DISCH. PRESS. (TAKE)	(kg/cm2G)	
45			
46			
47			
48	**MAX SHUT OFF PRESSURE (NOTE 1)**		
49	MAX. SUC. STATIC HEAD	(m)	
50	SUC. EQUIP. DESIGN PRESS.	(kg/cm2G)	
51	MAX. SUC. PRESS.	(kg/cm2G)	
52	DIFF. PRESS. (ΔP) (TAKE)	(kg/cm2)	
53	SHUTOFF COEFF.	(%)	
54	MAX. SHUTOFF PRESS.	(kg/cm2G)	

SKETCH

CASE 1 : EXPORT TO NEW JETTY

2 OPERATION + 0 STANDBY, TYPE : HORIZONTAL CENTRIFUGAL

MINIMUM FLOWRATE IS VENDOR DATA.

PUMP MINIMUM FLOWRATE =	106	m3/hr	
PUMP DISCH. P. AS PER CURVE =	11.3	kg/cm2g	(1)
SUCTION EQUIPMENT PRESS. =	0.00	kg/cm2g	(2)
SUCTION EQUIPMENT HEAD =	14.5	m	
	1.26	kg/cm2	(3)
PIPE FRICTION =	0.24	kg/cm2	(4)
FE-4019 DEL P =	0.20	kg/cm2	(5)
OTHERS DEL P =		kg/cm2	(6)
OTHERS DEL P =		kg/cm2	(7)
FV-4019 DEL P =	**9.6**	**kg/cm2**	(8)

(8) = (1) - (2) - (3) - (4) - (5) - (6) - (7)

PIPE PRESSURE DROP

PIPING MATERIAL (C.S. or SUS.) : C.S. (1C1P)

		Suction		Discharge			
SECTION				**a**			
FLOW RATE	(m^3/h)			106			
PIPE ID	(in)			**6**			
PIPE SCH.	(in)			40			
PIPE ID	(mm)			154.05			
ROUGHNESS	(mm)			0.046			
VELOCITY	(m/s)			**1.580**			
REYNOLDS NO.	(-)			375001			
FRICTION FACTOR	(-)			0.004			
ΔP / 100m	(kg/cm^2)			**0.119**			
STRAIGHT LENGTH	(m)			200			
NO. OF PIPE ENTRANCE							
NO. OF PIPE EXIT							
NO. OF 90 ELBOW							
NO. OF TEE							
NO. OF GLOBE VALVE							
NO. OF GATE VALVE							
NO. OF CHECK VALVE							
NO. OF BUTTER VALVE							
NO. OF BALL VALVE							
NO. OF CONTRACT							
NO. OF ENLARGER							
OTHER Ks							
PIPE ΔP	(kg/cm^2)			0.2379			
FITTING ΔP	(kg/cm^2)			0.0000			
TOTAL ΔP	(kg/cm^2)			**0.2379**			

NOTES

1. Differential shut off pressure at max impeller size shall be lower than pump differential pressure X 1.25.
   Max suction pressure = Max suction static head + Suction equipment design pressure

PUMP HYDRAULIC CALCULATION SHEET

LOTTE E&C

REV	DATE	BY	CHK'D	APP'D
2	07-Mar-2024	J.H.JUNG	S.K.PARK	C.M.BAE
1	06-Feb-2023	J.H.JUNG	S.K.PARK	C.M.BAE
0	30-Jun-2022	J.H.JUNG	S.K.PARK	C.M.BAE
3	14-Jun-2024	J.H.JUNG	S.K.PARK	C.M.BAE

REVISION

1	PROJECT :	LINE PROJECT	JOB NO. :	15005
2	CLIENT :	PT LOTTE CHEMICAL INDONESIA	DOCU. NO. :	LINE-900-BC-4-0001
3	LOCATION :	CILEGON, INDONESIA	ITEM NO. :	**90-P-417A/B**
4	UNIT :	WP5	NO. REQUIRED :	2 (TWO)
5	SERVICE :	**C8 AROMATICS EXPORT PUMPS**	SHEET :	1 OF 3

REVISION: 3

FLUID

7	LIQUID PUMPED		C8 AROMATICS	
8	OPERATING TEMPERATURE	(℃)	22.7	AMB
9	VISCOSITY @ OP. TEMP.	(cP)	0.661	
10	VAPOR PRESS. @ OP. TEMP.	(kg/cm2A)	0.01	
11	SP. GR. @ OP. TEMP.	(-)	0.866	
12				
13	NORMAL CAPACITY (125 t/h)	(m3/hr)	144	
14	EXCESS RATIO	(%)	10	
15	RATED CAPACITY	(m3/hr)	159	
16	**SUCTION**			
17	PRESS. @ EQUIPMENT	(kg/cm2A) (kg/cm2G)	1.03	0.00
18	MIN. STATIC HEAD	(m)	-0.30	
19	PIPE FRICTION	(kg/cm2)	0.122	
20	STRAINER	(kg/cm2)	0.07	
21		(kg/cm2)		
22		(kg/cm2)		
23				
24	NET SUC. PRESS.	(kg/cm2A) (kg/cm2G)	0.82	-0.2
25	NPSH a @ Suction Nozzle Center	(m)	9.3	
26	**DISCHARGE**			
27	PRESS. @ EQUIP. or BL	(kg/cm2A) (kg/cm2G)	1.53	0.50
28	STATIC HEAD	(m)	9.7	
29	PIPE FRICTION	(kg/cm2)	7.754	
30	FE-4022	(kg/cm2)	0.24	
31	FE-4023	(kg/cm2)	0.24	
32	FE-6015	(kg/cm2)	0.20	
33	LOADING ARM ΔP	(kg/cm2)	0.35	
34	MARGIN	(kg/cm2)	0.40	
35		(kg/cm2)		
36		(kg/cm2)		
37				
38	TOTAL DISCH. PRESS.	(kg/cm2A) (kg/cm2G)	11.6	10.5
39	SUC. PRESS.	(kg/cm2A) (kg/cm2G)	0.8	-0.2
40	DIFF. PRESS. (ΔP)	(kg/cm2)	10.7	
41	TOTAL HEAD (NET)	(m)	124	
42	TOTAL HEAD (TAKE)	(m)	124	
43	DIFF. PRESS. (ΔP) (TAKE)	(kg/cm2)	10.7	
44	TOTAL DISCH. PRESS. (TAKE)	(kg/cm2G)	10.5	
45				
46				
47				
48	**MAX SHUT OFF PRESSURE (NOTE 1)**			
49	MAX. SUC. STATIC HEAD	(m)	14.2	
50	SUC. EQUIP. DESIGN PRESS.	(kg/cm2G)	0.015	
51	MAX. SUC. PRESS.	(kg/cm2G)	1.2	
52	DIFF. PRESS. (ΔP) (TAKE)	(kg/cm2)	10.74	
53	SHUTOFF COEFF.	(%)	125	
54	MAX. SHUTOFF PRESS.	(kg/cm2G)	14.7	

SKETCH

CASE 1 : EXPORT TO NEW JETTY (GOVERNING)

2 OPERATION + 0 STANDBY, TYPE : HORIZONTAL CENTRIFUGAL

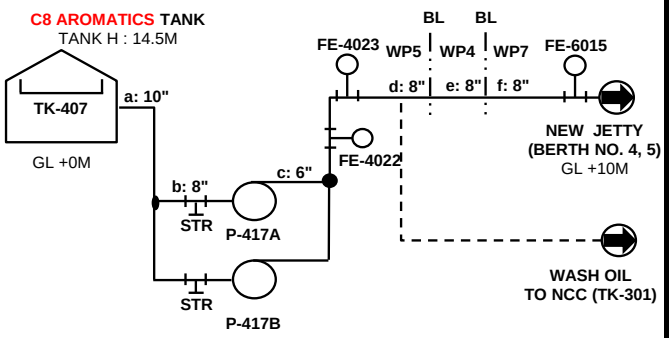

PIPE PRESSURE DROP

PIPING MATERIAL (C.S. or SUS.) : C.S. (1C1P)

		Suction		Discharge			
SECTION		**a**	**b**	**c**	**d**	**e**	**f**
FLOW RATE	(m^3/h)	317	159	159	317	317	317
PIPE ID	(in)	**10**	**8**	**6**	**8**	**8**	**8**
PIPE SCH.	(in)	40	40	40	40	40	40
PIPE ID	(mm)	254.51	202.72	154.05	202.72	202.72	202.72
ROUGHNESS	(mm)	0.046	0.046	0.046	0.046	0.046	0.046
VELOCITY	**(m/s)**	**1.733**	**1.366**	**2.366**	**2.732**	**2.732**	**2.732**
REYNOLDS NO.	(-)	577973	362815	477442	725630	725630	725630
FRICTION FACTOR	(-)	0.004	0.004	0.004	0.004	0.004	0.004
ΔP / 100m	(kg/cm^2)	**0.078**	**0.066**	**0.262**	**0.248**	**0.248**	**0.248**
STRAIGHT LENGTH	(m)	136	14	14	362	1032	1692
NO. OF PIPE ENTRANCE							
NO. OF PIPE EXIT							
NO. OF 90 ELBOW							
NO. OF TEE							
NO. OF GLOBE VALVE							
NO. OF GATE VALVE		3	1	1	1		4
NO. OF CHECK VALVE				1			1
NO. OF BUTTER VALVE							
NO. OF BALL VALVE							
NO. OF CONTRACT							
NO. OF ENLARGER							
OTHER Ks							
PIPE ΔP	(kg/cm^2)	0.1064	0.0094	0.0377	0.8984	2.5583	4.1945
FITTING ΔP	(kg/cm^2)	0.0047	0.0010	0.0217	0.0040	0.0000	0.0394
TOTAL ΔP	(kg/cm^2)	**0.1111**	**0.0104**	**0.0593**	**0.9024**	**2.5583**	**4.2338**

NOTES

1. Differential shut off pressure at max impeller size shall be lower than pump differential pressure X 1.25.
   Max suction pressure = Max suction static head + Suction equipment design pressure

: SELECTED DATA FOR PUMP DATASHEET

PUMP HYDRAULIC CALCULATION SHEET

LOTTE E&C

REV	DATE	BY	CHK'D	APP'D
2	07-Mar-2024	J.H.JUNG	S.K.PARK	C.M.BAE
1	06-Feb-2023	J.H.JUNG	S.K.PARK	C.M.BAE
0	30-Jun-2022	J.H.JUNG	S.K.PARK	C.M.BAE
3	14-Jun-2024	J.H.JUNG	S.K.PARK	C.M.BAE

REVISION

1	PROJECT :	LINE PROJECT	JOB NO. :	15005
2	CLIENT :	PT LOTTE CHEMICAL INDONESIA	DOCU. NO. :	LINE-900-BC-4-0001
3	LOCATION :	CILEGON, INDONESIA	ITEM NO. :	**90-P-417A/B**
4	UNIT :	WP5	NO. REQUIRED :	2 (TWO)
5	SERVICE :	**C8 AROMATICS EXPORT PUMPS**	SHEET :	2 OF 3

REVISION: 3

FLUID

LIQUID PUMPED		C8 AROMATICS	
OPERATING TEMPERATURE	(℃)	22.7	AMB
VISCOSITY @ OP. TEMP.	(cP)	0.661	
VAPOR PRESS. @ OP. TEMP.	(kg/cm2A)	0.01	
SP. GR. @ OP. TEMP.	(-)	0.866	
NORMAL CAPACITY (125 t/h)	(m3/hr)	144	
EXCESS RATIO	(%)	10	
RATED CAPACITY	(m3/hr)	159	
SUCTION			
PRESS. @ EQUIPMENT	(kg/cm2A) (kg/cm2G)	1.03	0.00
MIN. STATIC HEAD	(m)	-0.30	
PIPE FRICTION	(kg/cm2)	0.000	
STRAINER	(kg/cm2)	0.07	
	(kg/cm2)		
	(kg/cm2)		
NET SUC. PRESS.	(kg/cm2A) (kg/cm2G)	0.94	-0.1
NPSH a @ Suction Nozzle Center	(m)	10.7	
DISCHARGE			
PRESS. @ EQUIP. or BL	(kg/cm2A) (kg/cm2G)	4.03	3.00
STATIC HEAD	(m)	4.7	
PIPE FRICTION	(kg/cm2)	1.064	
FE-4022	(kg/cm2)	0.24	
FE-4023	(kg/cm2)	0.24	
	(kg/cm2)		
	(kg/cm2)		
	(kg/cm2)		
	(kg/cm2)		
TOTAL DISCH. PRESS.	(kg/cm2A) (kg/cm2G)	6.0	5.0
SUC. PRESS.	(kg/cm2A) (kg/cm2G)	0.9	-0.1
DIFF. PRESS. (ΔP)	(kg/cm2)	5.0	
TOTAL HEAD (NET)	(m)	58	
TOTAL HEAD (TAKE)	(m)		
DIFF. PRESS. (ΔP) (TAKE)	(kg/cm2)		
TOTAL DISCH. PRESS. (TAKE)	(kg/cm2G)		
MAX SHUT OFF PRESSURE (NOTE 1)			
MAX. SUC. STATIC HEAD	(m)		
SUC. EQUIP. DESIGN PRESS.	(kg/cm2G)		
MAX. SUC. PRESS.	(kg/cm2G)		
DIFF. PRESS. (ΔP) (TAKE)	(kg/cm2)		
SHUTOFF COEFF.	(%)		
MAX. SHUTOFF PRESS.	(kg/cm2G)		

SKETCH

CASE 2 : WASH OIL TO NCC (TK-301)

1 OPERATION + 1 STANDBY, TYPE : HORIZONTAL CENTRIFUGAL

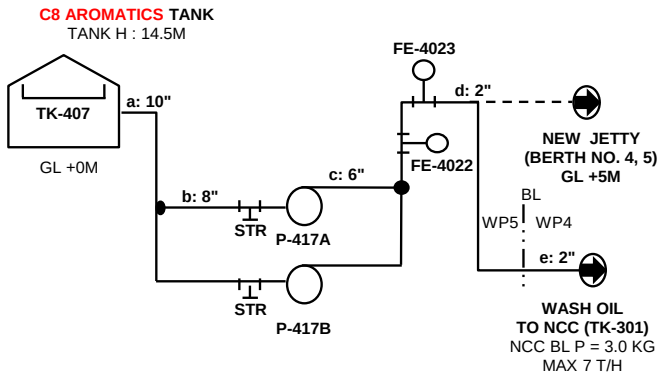

PIPE PRESSURE DROP

PIPING MATERIAL (C.S. or SUS.) : C.S. (1C1P)

		Suction		Discharge		
SECTION		**a**	**b**	**c**	**d**	**e**
FLOW RATE	(m^3/h)	8	8	8	8	8
PIPE ID	(in)	**10**	**8**	**6**	**2**	**2**
PIPE SCH.	(in)	40	40	40	40	40
PIPE ID	(mm)	254.51	202.72	154.05	52.50	52.50
ROUGHNESS	(mm)	0.046	0.046	0.046	0.046	0.046
VELOCITY	**(m/s)**	**0.044**	**0.069**	**0.119**	**1.027**	**1.027**
REYNOLDS NO.	(-)	14565	18286	24063	70608	70608
FRICTION FACTOR	(-)	0.007	0.007	0.006	0.006	0.006
ΔP / 100m	(kg/cm^2)	**0.000**	**0.000**	**0.001**	**0.200**	**0.200**
STRAIGHT LENGTH	(m)	136	14	14	362	168
NO. OF PIPE ENTRANCE						
NO. OF PIPE EXIT						
NO. OF 90 ELBOW						
NO. OF TEE						
NO. OF GLOBE VALVE						
NO. OF GATE VALVE		3	1	1	1	
NO. OF CHECK VALVE				1		
NO. OF BUTTER VALVE						
NO. OF BALL VALVE						
NO. OF CONTRACT						
NO. OF ENLARGER						
OTHER Ks						
PIPE ΔP	(kg/cm^2)	0.0001	0.0000	0.0001	0.7264	0.3368
FITTING ΔP	(kg/cm^2)	0.0000	0.0000	0.0001	0.0008	0.0000
TOTAL ΔP	(kg/cm^2)	**0.0001**	**0.0000**	**0.0002**	**0.7272**	**0.3368**

NOTES

1. Differential shut off pressure at max impeller size shall be lower than pump differential pressure X 1.25.
   Max suction pressure = Max suction static head + Suction equipment design pressure

PUMP HYDRAULIC CALCULATION SHEET

LOTTE E&C

REV	DATE	BY	CHK'D	APP'D
2	07-Mar-2024	J.H.JUNG	S.K.PARK	C.M.BAE
1	06-Feb-2023	J.H.JUNG	S.K.PARK	C.M.BAE
0	30-Jun-2022	J.H.JUNG	S.K.PARK	C.M.BAE
3	14-Jun-2024	J.H.JUNG	S.K.PARK	C.M.BAE

REVISION

1	PROJECT :	LINE PROJECT	JOB NO. :	15005
2	CLIENT :	PT LOTTE CHEMICAL INDONESIA	DOCU. NO. :	LINE-900-BC-4-0001
3	LOCATION :	CILEGON, INDONESIA	ITEM NO. :	**90-P-417A/B**
4	UNIT :	WP5	NO. REQUIRED :	2 (TWO)
5	SERVICE :	**C8 AROMATICS EXPORT PUMPS**	SHEET :	3 OF 3

	FLUID		
7	LIQUID PUMPED		C8 AROMATICS
8	OPERATING TEMPERATURE	(℃)	22.7 AMB
9	VISCOSITY @ OP. TEMP.	(cP)	0.661
10	VAPOR PRESS. @ OP. TEMP.	(kg/cm2A)	0.01
11	SP. GR. @ OP. TEMP.	(-)	0.866
12			
13	NORMAL CAPACITY (125 t/h)	(m3/hr)	144
14	EXCESS RATIO	(%)	10
15	RATED CAPACITY	(m3/hr)	159
16	**SUCTION**		
17	PRESS. @ EQUIPMENT	(kg/cm2A) (kg/cm2G)	
18	MIN. STATIC HEAD	(m)	
19	PIPE FRICTION	(kg/cm2)	
20		(kg/cm2)	
21		(kg/cm2)	
22		(kg/cm2)	
23			
24	NET SUC. PRESS.	(kg/cm2A) (kg/cm2G)	
25	NPSH a @ Suction Nozzle Center	(m)	
26	**DISCHARGE**		
27	PRESS. @ EQUIP. or BL	(kg/cm2A) (kg/cm2G)	
28	STATIC HEAD	(m)	
29	PIPE FRICTION	(kg/cm2)	
30		(kg/cm2)	
31		(kg/cm2)	
32		(kg/cm2)	
33		(kg/cm2)	
34		(kg/cm2)	
35		(kg/cm2)	
36		(kg/cm2)	
37			
38	TOTAL DISCH. PRESS.	(kg/cm2A) (kg/cm2G)	
39	SUC. PRESS.	(kg/cm2A) (kg/cm2G)	
40	DIFF. PRESS. (ΔP)	(kg/cm2)	
41	TOTAL HEAD (NET)	(m)	
42	TOTAL HEAD (TAKE)	(m)	
43	DIFF. PRESS. (ΔP) (TAKE)	(kg/cm2)	
44	TOTAL DISCH. PRESS. (TAKE)	(kg/cm2G)	
45			
46			
47			
48	**MAX SHUT OFF PRESSURE (NOTE 1)**		
49	MAX. SUC. STATIC HEAD	(m)	
50	SUC. EQUIP. DESIGN PRESS.	(kg/cm2G)	
51	MAX. SUC. PRESS.	(kg/cm2G)	
52	DIFF. PRESS. (ΔP) (TAKE)	(kg/cm2)	
53	SHUTOFF COEFF.	(%)	
54	MAX. SHUTOFF PRESS.	(kg/cm2G)	

SKETCH

PUMP MINIMUM FLOW LINE

2 OPERATION + 0 STANDBY, TYPE : HORIZONTAL CENTRIFUGAL

MINIMUM FLOWRATE IS VENDOR DATA.

PUMP MINIMUM FLOWRATE =	144	m3/hr	
PUMP DISCH. P. AS PER CURVE =	11.8	kg/cm2g	(1)
SUCTION EQUIPMENT PRESS. =	0.00	kg/cm2g	(2)
SUCTION EQUIPMENT HEAD =	14.5	m	
	1.26	kg/cm2	(3)
PIPE FRICTION =	0.43	kg/cm2	(4)
FE-4022 DEL P =	0.24	kg/cm2	(5)
OTHERS DEL P =		kg/cm2	(6)
OTHERS DEL P =		kg/cm2	(7)
FV-4022 DEL P =	**9.9**	**kg/cm2**	(8)

(8) = (1) - (2) - (3) - (4) - (5) - (6) - (7)

PIPE PRESSURE DROP

PIPING MATERIAL (C.S. or SUS.) : C.S. (1C1P)

		Suction		Discharge			
SECTION				**a**			
FLOW RATE	(m^3/h)			144			
PIPE ID	(in)			**6**			
PIPE SCH.	(in)			40			
PIPE ID	(mm)			154.05			
ROUGHNESS	(mm)			0.046			
VELOCITY	**(m/s)**			**2.146**			
REYNOLDS NO.	(-)			433136			
FRICTION FACTOR	(-)			0.004			
ΔP / 100m	(kg/cm^2)			**0.217**			
STRAIGHT LENGTH	(m)			200			
NO. OF PIPE ENTRANCE							
NO. OF PIPE EXIT							
NO. OF 90 ELBOW							
NO. OF TEE							
NO. OF GLOBE VALVE							
NO. OF GATE VALVE							
NO. OF CHECK VALVE							
NO. OF BUTTER VALVE							
NO. OF BALL VALVE							
NO. OF CONTRACT							
NO. OF ENLARGER							
OTHER Ks							
PIPE ΔP	(kg/cm^2)			0.4339			
FITTING ΔP	(kg/cm^2)			0.0000			
TOTAL ΔP	(kg/cm^2)			**0.4339**			

NOTES

1. Differential shut off pressure at max impeller size shall be lower than pump differential pressure X 1.25.
   Max suction pressure = Max suction static head + Suction equipment design pressure

PUMP HYDRAULIC CALCULATION SHEET

LOTTE E&C

REV	DATE	BY	CHK'D	APP'D
2	07-Mar-2024	J.H.JUNG	S.K.PARK	C.M.BAE
1	06-Feb-2023	J.H.JUNG	S.K.PARK	C.M.BAE
0	30-Jun-2022	J.H.JUNG	S.K.PARK	C.M.BAE
3	14-Jun-2024	J.H.JUNG	S.K.PARK	C.M.BAE

REVISION

1	PROJECT :	LINE PROJECT	JOB NO. :	15005
2	CLIENT :	PT LOTTE CHEMICAL INDONESIA	DOCU. NO. :	LINE-900-BC-4-0001
3	LOCATION :	CILEGON, INDONESIA	ITEM NO. :	**90-P-418A/B**
4	UNIT :	WP5	NO. REQUIRED :	2 (TWO)
5	SERVICE :	**C9+ EXPORT PUMPS**	SHEET :	1 OF 2

FLUID

7	LIQUID PUMPED		C9+	
8	OPERATING TEMPERATURE	(℃)	22.7	AMB
9	VISCOSITY @ OP. TEMP.	(cP)	1.304	
10	VAPOR PRESS. @ OP. TEMP.	(kg/cm2A)	0.069	
11	SP. GR. @ OP. TEMP.	(-)	0.933	
12				
13	NORMAL CAPACITY (100 t/h)	(m3/hr)	107	
14	EXCESS RATIO	(%)	10	
15	RATED CAPACITY	(m3/hr)	118	
16	**SUCTION**			
17	PRESS. @ EQUIPMENT	(kg/cm2A) (kg/cm2G)	1.03	0.00
18	MIN. STATIC HEAD	(m)	-0.30	
19	PIPE FRICTION	(kg/cm2)	0.103	
20	STRAINER	(kg/cm2)	0.07	
21		(kg/cm2)		
22		(kg/cm2)		
23				
24	NET SUC. PRESS.	(kg/cm2A) (kg/cm2G)	0.832	-0.2
25	NPSH a @ Suction Nozzle Center	(m)	8.2	
26	**DISCHARGE**			
27	PRESS. @ EQUIP. or BL	(kg/cm2A) (kg/cm2G)	1.53	0.50
28	STATIC HEAD	(m)	9.7	
29	PIPE FRICTION	(kg/cm2)	4.998	
30	FE-4025	(kg/cm2)	0.20	
31	FE-4026	(kg/cm2)	0.20	
32	FE-6016	(kg/cm2)	0.20	
33	LOADING ARM ΔP	(kg/cm2)	1.00	
34		(kg/cm2)		
35		(kg/cm2)		
36		(kg/cm2)		
37				
38	TOTAL DISCH. PRESS.	(kg/cm2A) (kg/cm2G)	9.0	8.0
39	SUC. PRESS.	(kg/cm2A) (kg/cm2G)	0.8	-0.2
40	DIFF. PRESS. (ΔP)	(kg/cm2)	8.2	
41	TOTAL HEAD (NET)	(m)	88	
42	TOTAL HEAD (TAKE)	(m)	88	
43	DIFF. PRESS. (ΔP) (TAKE)	(kg/cm2)	8.2	
44	TOTAL DISCH. PRESS. (TAKE)	(kg/cm2G)	8.0	
45				
46				
47				
48	**MAX SHUT OFF PRESSURE (NOTE 1)**			
49	MAX. SUC. STATIC HEAD	(m)	14.2	
50	SUC. EQUIP. DESIGN PRESS.	(kg/cm2G)	0.015	
51	MAX. SUC. PRESS.	(kg/cm2G)	1.3	
52	DIFF. PRESS. (ΔP) (TAKE)	(kg/cm2)	9.5	
53	SHUTOFF COEFF.	(%)		
54	MAX. SHUTOFF PRESS.	(kg/cm2G)	10.8	

SKETCH

CASE : EXPORT TO NEW JETTY

2 OPERATION + 0 STANDBY, TYPE : HORIZONTAL CENTRIFUGAL

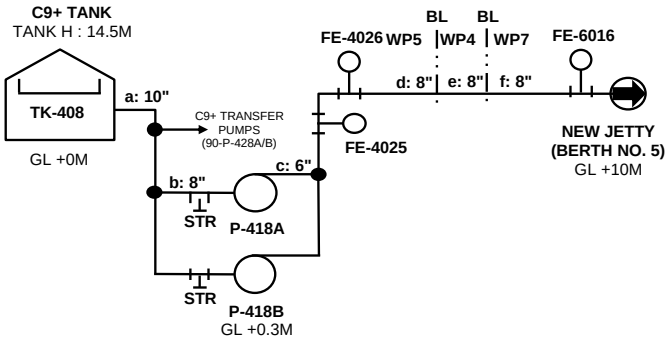

PIPE PRESSURE DROP

PIPING MATERIAL (C.S. or SUS.) : C.S. (1C1P)

		Suction		Discharge			
SECTION		**a**	**b**	**c**	**d**	**e**	**f**
FLOW RATE	(m^3/h)	260	118	118	236	236	236
PIPE ID	(in)	**10**	**8**	**6**	**8**	**8**	**8**
PIPE SCH.	(in)	40	40	40	40	40	40
PIPE ID	(mm)	254.51	202.72	154.05	202.72	202.72	202.72
ROUGHNESS	(mm)	0.046	0.046	0.046	0.046	0.046	0.046
VELOCITY	(m/s)	**1.419**	**1.015**	**1.757**	**2.030**	**2.030**	**2.030**
REYNOLDS NO.	(-)	258352	147198	193703	294396	294396	294396
FRICTION FACTOR	(-)	0.004	0.005	0.004	0.004	0.004	0.004
ΔP / 100m	(kg/cm^2)	**0.062**	**0.044**	**0.170**	**0.159**	**0.159**	**0.159**
STRAIGHT LENGTH	(m)	157	7	7	379	1032	1692
NO. OF PIPE ENTRANCE							
NO. OF PIPE EXIT							
NO. OF 90 ELBOW							
NO. OF TEE							
NO. OF GLOBE VALVE							
NO. OF GATE VALVE		2	1	1	1		4
NO. OF CHECK VALVE				1			1
NO. OF BUTTER VALVE							
NO. OF BALL VALVE							
NO. OF CONTRACT							
NO. OF ENLARGER							
OTHER Ks							
PIPE ΔP	(kg/cm^2)	0.0970	0.0031	0.0122	0.6046	1.6453	2.6976
FITTING ΔP	(kg/cm^2)	0.0022	0.0006	0.0129	0.0024	0.0000	0.0234
TOTAL ΔP	(kg/cm^2)	**0.0993**	**0.0037**	**0.0251**	**0.6069**	**1.6453**	**2.7210**

NOTES

1. Differential shut off pressure at max impeller size shall be lower than pump differential pressure X 1.25.
   Max suction pressure = Max suction static head + Suction equipment design pressure
   For this pump, Max shut off pressure is calculated as below;
   Differential shut off pressure = vendor shut off head (101.9m)

: SELECTED DATA FOR PUMP DATASHEET

PUMP HYDRAULIC CALCULATION SHEET

LOTTE E&C

REV	DATE	BY	CHK'D	APP'D
2	07-Mar-2024	J.H.JUNG	S.K.PARK	C.M.BAE
1	06-Feb-2023	J.H.JUNG	S.K.PARK	C.M.BAE
0	30-Jun-2022	J.H.JUNG	S.K.PARK	C.M.BAE
3	14-Jun-2024	J.H.JUNG	S.K.PARK	C.M.BAE

REVISION

1	PROJECT :	LINE PROJECT	JOB NO. :	15005
2	CLIENT :	PT LOTTE CHEMICAL INDONESIA	DOCU. NO. :	LINE-900-BC-4-0001
3	LOCATION :	CILEGON, INDONESIA	ITEM NO. :	**90-P-418A/B**
4	UNIT :	WP5	NO. REQUIRED :	2 (TWO)
5	SERVICE :	**C9+ EXPORT PUMPS**	SHEET :	2 OF 2

	FLUID		
7	LIQUID PUMPED		C9+
8	OPERATING TEMPERATURE	(℃)	22.7 AMB
9	VISCOSITY @ OP. TEMP.	(cP)	1.304
10	VAPOR PRESS. @ OP. TEMP.	(kg/cm2A)	0.069
11	SP. GR. @ OP. TEMP.	(-)	0.933
12			
13	NORMAL CAPACITY (100 t/h)	(m3/hr)	107
14	EXCESS RATIO	(%)	10
15	RATED CAPACITY	(m3/hr)	118
16	**SUCTION**		
17	PRESS. @ EQUIPMENT	(kg/cm2A) (kg/cm2G)	
18	MIN. STATIC HEAD	(m)	
19	PIPE FRICTION	(kg/cm2)	
20		(kg/cm2)	
21		(kg/cm2)	
22		(kg/cm2)	
23			
24	NET SUC. PRESS.	(kg/cm2A) (kg/cm2G)	
25	NPSH a @ Suction Nozzle Center	(m)	
26	**DISCHARGE**		
27	PRESS. @ EQUIP. or BL	(kg/cm2A) (kg/cm2G)	
28	STATIC HEAD	(m)	
29	PIPE FRICTION	(kg/cm2)	
30		(kg/cm2)	
31		(kg/cm2)	
32		(kg/cm2)	
33		(kg/cm2)	
34		(kg/cm2)	
35		(kg/cm2)	
36		(kg/cm2)	
37			
38	TOTAL DISCH. PRESS.	(kg/cm2A) (kg/cm2G)	
39	SUC. PRESS.	(kg/cm2A) (kg/cm2G)	
40	DIFF. PRESS. (ΔP)	(kg/cm2)	
41	TOTAL HEAD (NET)	(m)	
42	TOTAL HEAD (TAKE)	(m)	
43	DIFF. PRESS. (ΔP) (TAKE)	(kg/cm2)	
44	TOTAL DISCH. PRESS. (TAKE)	(kg/cm2G)	
45			
46			
47			
48	**MAX SHUT OFF PRESSURE (NOTE 1)**		
49	MAX. SUC. STATIC HEAD	(m)	
50	SUC. EQUIP. DESIGN PRESS.	(kg/cm2G)	
51	MAX. SUC. PRESS.	(kg/cm2G)	
52	DIFF. PRESS. (ΔP) (TAKE)	(kg/cm2)	
53	SHUTOFF COEFF.	(%)	
54	MAX. SHUTOFF PRESS.	(kg/cm2G)	

SKETCH

PUMP MINIMUM FLOW LINE

2 OPERATION + 0 STANDBY, TYPE : HORIZONTAL CENTRIFUGAL

MINIMUM FLOWRATE IS VENDOR DATA.

PUMP MINIMUM FLOWRATE =	106	m3/hr	
PUMP DISCH. P. AS PER CURVE =	9.0	kg/cm2g	(1)
SUCTION EQUIPMENT PRESS. =	0.00	kg/cm2g	(2)
SUCTION EQUIPMENT HEAD =	14.5	m	
	1.35	kg/cm2	(3)
PIPE FRICTION =	0.28	kg/cm2	(4)
FE-4025 DEL P =	0.20	kg/cm2	(5)
OTHERS DEL P =		kg/cm2	(6)
OTHERS DEL P =		kg/cm2	(7)
FV-4025 DEL P =	**7.2**	**kg/cm2**	(8)

(8) = (1) - (2) - (3) - (4) - (5) - (6) - (7)

PIPE PRESSURE DROP

PIPING MATERIAL (C.S. or SUS.) : C.S. (1C1P)

		Suction		Discharge			
SECTION				**a**			
FLOW RATE	(m^3/h)			106			
PIPE ID	(in)			**6**			
PIPE SCH.	(in)			40			
PIPE ID	(mm)			154.05			
ROUGHNESS	(mm)			0.046			
VELOCITY	(m/s)			**1.580**			
REYNOLDS NO.	(-)			174122			
FRICTION FACTOR	(-)			0.005			
ΔP / 100m	(kg/cm^2)			**0.139**			
STRAIGHT LENGTH	(m)			200			
NO. OF PIPE ENTRANCE							
NO. OF PIPE EXIT							
NO. OF 90 ELBOW							
NO. OF TEE							
NO. OF GLOBE VALVE							
NO. OF GATE VALVE							
NO. OF CHECK VALVE							
NO. OF BUTTER VALVE							
NO. OF BALL VALVE							
NO. OF CONTRACT							
NO. OF ENLARGER							
OTHER Ks							
PIPE ΔP	(kg/cm^2)			0.2777			
FITTING ΔP	(kg/cm^2)			0.0000			
TOTAL ΔP	(kg/cm^2)			**0.2777**			

NOTES

1. Differential shut off pressure at max impeller size shall be lower than pump differential pressure X 1.25.
   Max suction pressure = Max suction static head + Suction equipment design pressure

PUMP HYDRAULIC CALCULATION SHEET

LOTTE E&C

REV	DATE	BY	CHK'D	APP'D
2	07-Mar-2024	J.H.JUNG	S.K.PARK	C.M.BAE
1	06-Feb-2023	J.H.JUNG	S.K.PARK	C.M.BAE
0	30-Jun-2022	J.H.JUNG	S.K.PARK	C.M.BAE
3	14-Jun-2024	J.H.JUNG	S.K.PARK	C.M.BAE

REVISION

1	PROJECT :	LINE PROJECT	JOB NO. :	15005
2	CLIENT :	PT LOTTE CHEMICAL INDONESIA	DOCU. NO. :	LINE-900-BC-4-0001
3	LOCATION :	CILEGON, INDONESIA	ITEM NO. :	**90-P-422A/B**
4	UNIT :	WP5	NO. REQUIRED :	2 (TWO)
5	SERVICE :	**C5 TRANSFER PUMPS**	SHEET :	1 OF 3

	FLUID			
7	LIQUID PUMPED		C5	
8	OPERATING TEMPERATURE	(℃)	22.7	AMB
9	VISCOSITY @ OP. TEMP.	(cP)	0.26	
10	VAPOR PRESS. @ OP. TEMP.	(kg/cm2A)	1.060	
11	SP. GR. @ OP. TEMP.	(-)	0.664	
12				
13	NORMAL CAPACITY (50 t/h)	(m3/hr)	75	
14	EXCESS RATIO	(%)	10	
15	RATED CAPACITY	(m3/hr)	83	
16	**SUCTION**			
17	PRESS. @ EQUIPMENT	(kg/cm2A) (kg/cm2G)	1.06	0.03
18	MIN. STATIC HEAD	(m)	4.7	(NOTE 2)
19	PIPE FRICTION	(kg/cm2)	0.012	
20	STRAINER	(kg/cm2)	0.07	
21		(kg/cm2)		
22		(kg/cm2)		
23				
24	NET SUC. PRESS.	(kg/cm2A) (kg/cm2G)	1.293	0.3
25	NPSH a @ Suction Nozzle Center	(m)	3.5	
26	**DISCHARGE**			
27	PRESS. @ EQUIP. or BL	(kg/cm2A) (kg/cm2G)	15.03	14.0
28	STATIC HEAD	(m)	4.7	
29	PIPE FRICTION	(kg/cm2)	2.385	
30	FE-4033	(kg/cm2)	0.20	
31	-	(kg/cm2)	-	
32		(kg/cm2)		
33		(kg/cm2)		
34		(kg/cm2)		
35		(kg/cm2)		
36		(kg/cm2)		
37				
38	TOTAL DISCH. PRESS.	(kg/cm2A) (kg/cm2G)	17.9	16.9
39	SUC. PRESS.	(kg/cm2A) (kg/cm2G)	1.3	0.3
40	DIFF. PRESS. (ΔP)	(kg/cm2)	16.6	
41	TOTAL HEAD (NET)	(m)	251	
42	TOTAL HEAD (TAKE)	(m)	251	
43	DIFF. PRESS. (ΔP) (TAKE)	(kg/cm2)	16.6	
44	TOTAL DISCH. PRESS. (TAKE)	(kg/cm2G)	16.9	
45				
46				
47				
48	**MAX SHUT OFF PRESSURE (NOTE 1)**			
49	MAX. SUC. STATIC HEAD	(m)	22.9	
50	SUC. EQUIP. DESIGN PRESS.	(kg/cm2G)	3.90	
51	MAX. SUC. PRESS.	(kg/cm2G)	5.4	
52	DIFF. PRESS. (ΔP) (TAKE)	(kg/cm2)	18.4	
53	SHUTOFF COEFF.	(%)		
54	MAX. SHUTOFF PRESS.	(kg/cm2G)	23.8	(NOTE 3)

SKETCH

CASE 1 : TRANSFER TO NCC

1 OPERATION + 1 STANDBY, TYPE : HORIZONTAL CENTRIFUGAL

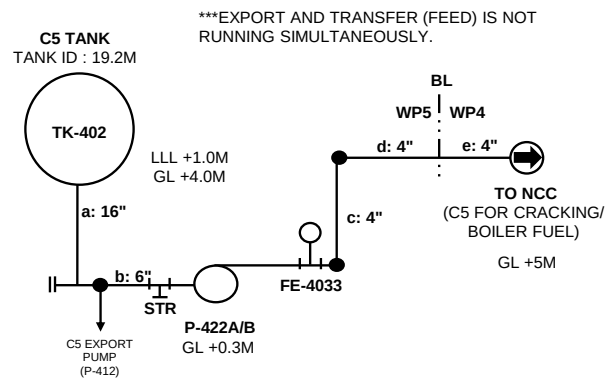

PIPE PRESSURE DROP

PIPING MATERIAL (C.S. or SUS.) : C.S. (3C1P)

		Suction		Discharge		
SECTION		**a**	**b**	**c**	**d**	**e**
FLOW RATE	(m^3/h)	83	83	83	83	83
PIPE ID	(in)	**16**	**6**	**4**	**4**	**4**
PIPE SCH.	(in)	STD	40	40	40	40
PIPE ID	(mm)	387.35	154.05	102.26	102.26	102.26
ROUGHNESS	(mm)	0.046	0.046	0.046	0.046	0.046
VELOCITY	(m/s)	**0.195**	**1.234**	**2.801**	**2.801**	**2.807**
REYNOLDS NO.	(-)	193146	485654	731616	731616	733118
FRICTION FACTOR	(-)	0.004	0.004	0.004	0.004	0.004
ΔP / 100m	(kg/cm^2)	**0.001**	**0.055**	**0.443**	**0.443**	**0.444**
STRAIGHT LENGTH	(m)	89	22	22	342	168
NO. OF PIPE ENTRANCE						
NO. OF PIPE EXIT						
NO. OF 90 ELBOW		5				
NO. OF TEE						
NO. OF GLOBE VALVE						
NO. OF GATE VALVE		4		1	1	
NO. OF CHECK VALVE				1		
NO. OF BUTTER VALVE						
NO. OF BALL VALVE						
NO. OF CONTRACT						
NO. OF ENLARGER						
OTHER Ks						
PIPE ΔP	(kg/cm^2)	0.0005	0.0118	0.0956	1.5138	0.7466
FITTING ΔP	(kg/cm^2)	0.0002	0.0000	0.0251	0.0036	0.0000
TOTAL ΔP	(kg/cm^2)	**0.0007**	**0.0118**	**0.1207**	**1.5174**	**0.7466**

NOTES

1. Differential shut off pressure at max impeller size shall be lower than pump differential pressure X 1.25
   Max suction pressure = Max suction static head + Suction equipment design pressure
   For this pump, Max shut off pressure is calculated as below;
   Differential shut off pressure = vendor shut off head (276.9m)
2. LLL is considered for NPSHa.
3. Downstream design pressure is applied as 25.5 kg/cm2g.

: SELECTED DATA FOR PUMP DATASHEET

PUMP HYDRAULIC CALCULATION SHEET

LOTTE E&C

REV	DATE	BY	CHK'D	APP'D
2	07-Mar-2024	J.H.JUNG	S.K.PARK	C.M.BAE
1	06-Feb-2023	J.H.JUNG	S.K.PARK	C.M.BAE
0	30-Jun-2022	J.H.JUNG	S.K.PARK	C.M.BAE
3	14-Jun-2024	J.H.JUNG	S.K.PARK	C.M.BAE

REVISION

1	PROJECT :	LINE PROJECT	JOB NO. :	15005
2	CLIENT :	PT LOTTE CHEMICAL INDONESIA	DOCU. NO. :	LINE-900-BC-4-0001
3	LOCATION :	CILEGON, INDONESIA	ITEM NO. :	**90-P-422A/B**
4	UNIT :	WP5	NO. REQUIRED :	2 (TWO)
5	SERVICE :	**C5 TRANSFER PUMPS**	SHEET :	2 OF 3

6	**FLUID**			
7	LIQUID PUMPED		C5	
8	OPERATING TEMPERATURE	(℃)	22.7	AMB
9	VISCOSITY @ OP. TEMP.	(cP)	0.26	
10	VAPOR PRESS. @ OP. TEMP.	(kg/cm2A)	1.060	
11	SP. GR. @ OP. TEMP.	(-)	0.664	
12				
13	NORMAL CAPACITY (50 t/h)	(m3/hr)	75	
14	EXCESS RATIO	(%)	10	
15	RATED CAPACITY	(m3/hr)	83	
16	**SUCTION**			
17	PRESS. @ EQUIPMENT	(kg/cm2A) (kg/cm2G)	1.06	0.03
18	MIN. STATIC HEAD	(m)	4.7	(NOTE 2)
19	PIPE FRICTION	(kg/cm2)	0.012	
20	STRAINER	(kg/cm2)	0.07	
21		(kg/cm2)		
22		(kg/cm2)		
23				
24	NET SUC. PRESS.	(kg/cm2A) (kg/cm2G)	1.293	0.3
25	NPSH a @ Suction Nozzle Center	(m)	3.5	
26	**DISCHARGE**			
27	PRESS. @ EQUIP. or BL	(kg/cm2A) (kg/cm2G)	1.03	0.0
28	STATIC HEAD	(m)	14.2	
29	PIPE FRICTION	(kg/cm2)	1.317	
30	FE-4033	(kg/cm2)	0.20	
31	FE-4012	(kg/cm2)	0.20	
32	FV-4012	(kg/cm2)	14.3	
33		(kg/cm2)		
34		(kg/cm2)		
35		(kg/cm2)		
36		(kg/cm2)		
37				
38	TOTAL DISCH. PRESS.	(kg/cm2A) (kg/cm2G)	17.9	16.9
39	SUC. PRESS.	(kg/cm2A) (kg/cm2G)	1.3	0.3
40	DIFF. PRESS. (ΔP)	(kg/cm2)	16.6	
41	TOTAL HEAD (NET)	(m)	251	
42	TOTAL HEAD (TAKE)	(m)		
43	DIFF. PRESS. (ΔP) (TAKE)	(kg/cm2)		
44	TOTAL DISCH. PRESS. (TAKE)	(kg/cm2G)		
45				
46				
47				
48	**MAX SHUT OFF PRESSURE (NOTE 1)**			
49	MAX. SUC. STATIC HEAD	(m)		
50	SUC. EQUIP. DESIGN PRESS.	(kg/cm2G)		
51	MAX. SUC. PRESS.	(kg/cm2G)		
52	DIFF. PRESS. (ΔP) (TAKE)	(kg/cm2)		
53	SHUTOFF COEFF.	(%)		
54	MAX. SHUTOFF PRESS.	(kg/cm2G)		

SKETCH

CASE 2 : TRANSFER TO GC5C6 TANK

1 OPERATION + 1 STANDBY, TYPE : HORIZONTAL CENTRIFUGAL

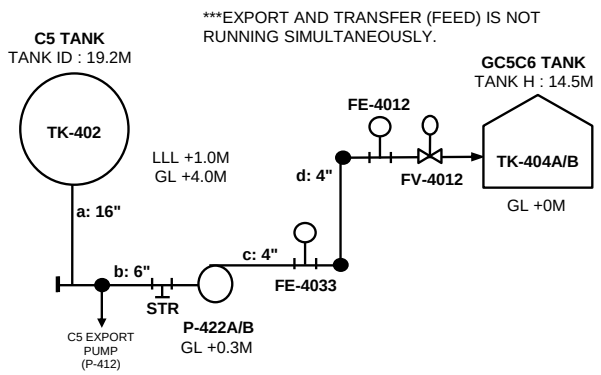

PIPE PRESSURE DROP

PIPING MATERIAL (C.S. or SUS.) : C.S. (3C1P)

		Suction		Discharge			
SECTION		**a**	**b**	**c**	**d**		
FLOW RATE	(m^3/h)	83	83	83	83		
PIPE ID	(in)	**16**	**6**	**4**	**4**		
PIPE SCH.	(in)	STD	40	40	40		
PIPE ID	(mm)	387.35	154.05	102.26	102.26		
ROUGHNESS	(mm)	0.046	0.046	0.046	0.046		
VELOCITY	(m/s)	**0.195**	**1.234**	**2.801**	**2.801**		
REYNOLDS NO.	(-)	193146	485654	731616	731616		
FRICTION FACTOR	(-)	0.004	0.004	0.004	0.004		
ΔP / 100m	(kg/cm^2)	**0.001**	**0.055**	**0.443**	**0.443**		
STRAIGHT LENGTH	(m)	89	22	22	228		
NO. OF PIPE ENTRANCE							
NO. OF PIPE EXIT							
NO. OF 90 ELBOW		5					
NO. OF TEE							
NO. OF GLOBE VALVE					1		
NO. OF GATE VALVE		4		1	3		
NO. OF CHECK VALVE				1	1		
NO. OF BUTTER VALVE							
NO. OF BALL VALVE							
NO. OF CONTRACT							
NO. OF ENLARGER							
OTHER Ks							
PIPE ΔP	(kg/cm^2)	0.0005	0.0118	0.0956	1.0092		
FITTING ΔP	(kg/cm^2)	0.0002	0.0000	0.0251	0.1867		
TOTAL ΔP	(kg/cm^2)	**0.0007**	**0.0118**	**0.1207**	**1.1959**		

NOTES

1. Differential shut off pressure at max impeller size shall be lower than pump differential pressure X 1.25
   Max suction pressure = Max suction static head + Suction equipment design pressure
2. LLL is considered for NPSHa.

PUMP HYDRAULIC CALCULATION SHEET

LOTTE E&C

REV	DATE	BY	CHK'D	APP'D
2	07-Mar-2024	J.H.JUNG	S.K.PARK	C.M.BAE
1	06-Feb-2023	J.H.JUNG	S.K.PARK	C.M.BAE
0	30-Jun-2022	J.H.JUNG	S.K.PARK	C.M.BAE
3	14-Jun-2024	J.H.JUNG	S.K.PARK	C.M.BAE

REVISION

1	PROJECT :	LINE PROJECT	JOB NO. :	15005
2	CLIENT :	PT LOTTE CHEMICAL INDONESIA	DOCU. NO. :	LINE-900-BC-4-0001
3	LOCATION :	CILEGON, INDONESIA	ITEM NO. :	**90-P-422A/B**
4	UNIT :	WP5	NO. REQUIRED :	2 (TWO)
5	SERVICE :	**C5 TRANSFER PUMPS**	SHEET :	3 OF 3

	FLUID		
7	LIQUID PUMPED		C5
8	OPERATING TEMPERATURE	(℃)	22.7 AMB
9	VISCOSITY @ OP. TEMP.	(cP)	0.26
10	VAPOR PRESS. @ OP. TEMP.	(kg/cm2A)	1.060
11	SP. GR. @ OP. TEMP.	(-)	0.664
12			
13	NORMAL CAPACITY (50 t/h)	(m3/hr)	75
14	EXCESS RATIO	(%)	10
15	RATED CAPACITY	(m3/hr)	83
16	**SUCTION**		
17	PRESS. @ EQUIPMENT	(kg/cm2A) (kg/cm2G)	
18	MIN. STATIC HEAD	(m)	
19	PIPE FRICTION	(kg/cm2)	
20		(kg/cm2)	
21		(kg/cm2)	
22		(kg/cm2)	
23			
24	NET SUC. PRESS.	(kg/cm2A) (kg/cm2G)	
25	NPSH a @ Suction Nozzle Center	(m)	
26	**DISCHARGE**		
27	PRESS. @ EQUIP. or BL	(kg/cm2A) (kg/cm2G)	
28	STATIC HEAD	(m)	
29	PIPE FRICTION	(kg/cm2)	
30		(kg/cm2)	
31		(kg/cm2)	
32		(kg/cm2)	
33		(kg/cm2)	
34		(kg/cm2)	
35		(kg/cm2)	
36		(kg/cm2)	
37			
38	TOTAL DISCH. PRESS.	(kg/cm2A) (kg/cm2G)	
39	SUC. PRESS.	(kg/cm2A) (kg/cm2G)	
40	DIFF. PRESS. (ΔP)	(kg/cm2)	
41	TOTAL HEAD (NET)	(m)	
42	TOTAL HEAD (TAKE)	(m)	
43	DIFF. PRESS. (ΔP) (TAKE)	(kg/cm2)	
44	TOTAL DISCH. PRESS. (TAKE)	(kg/cm2G)	
45			
46			
47			
48	**MAX SHUT OFF PRESSURE (NOTE 1)**		
49	MAX. SUC. STATIC HEAD	(m)	
50	SUC. EQUIP. DESIGN PRESS.	(kg/cm2G)	
51	MAX. SUC. PRESS.	(kg/cm2G)	
52	DIFF. PRESS. (ΔP) (TAKE)	(kg/cm2)	
53	SHUTOFF COEFF.	(%)	
54	MAX. SHUTOFF PRESS.	(kg/cm2G)	

SKETCH

PUMP MINIMUM FLOW LINE

1 OPERATION + 1 STANDBY, TYPE : HORIZONTAL CENTRIFUGAL

MINIMUM FLOWRATE IS VENDOR DATA.

PUMP MINIMUM FLOWRATE =	40	m3/hr	
PUMP DISCH. P. AS PER CURVE =	18.5	kg/cm2g	(1)
SUCTION EQUIPMENT PRESS. =	0.03	kg/cm2g	(2)
SUCTION EQUIPMENT HEAD =	23.2	m	
	1.54	kg/cm2	(3)
PIPE FRICTION =	0.86	kg/cm2	(4)
FE-4033 DEL P =	0.20	kg/cm2	(5)
OTHERS DEL P =		kg/cm2	(6)
OTHERS DEL P =		kg/cm2	(7)
FV-4033 DEL P =	**15.9**	**kg/cm2**	(8)

(8) = (1) - (2) - (3) - (4) - (5) - (6) - (7)

PIPE PRESSURE DROP

PIPING MATERIAL (C.S. or SUS.) : C.S. (3C1P)

		Suction		Discharge			
SECTION				**a**			
FLOW RATE	(m^3/h)			40			
PIPE ID	(in)			3			
PIPE SCH.	(in)			40			
PIPE ID	(mm)			77.93			
ROUGHNESS	(mm)			0.046			
VELOCITY	(m/s)			**2.329**			
REYNOLDS NO.	(-)			463614			
FRICTION FACTOR	(-)			0.005			
ΔP / 100m	(kg/cm^2)			**0.430**			
STRAIGHT LENGTH	(m)			200			
NO. OF PIPE ENTRANCE							
NO. OF PIPE EXIT							
NO. OF 90 ELBOW							
NO. OF TEE							
NO. OF GLOBE VALVE							
NO. OF GATE VALVE							
NO. OF CHECK VALVE							
NO. OF BUTTER VALVE							
NO. OF BALL VALVE							
NO. OF CONTRACT							
NO. OF ENLARGER							
OTHER Ks							
PIPE ΔP	(kg/cm^2)			0.8608			
FITTING ΔP	(kg/cm^2)			0.0000			
TOTAL ΔP	(kg/cm^2)			**0.8608**			

NOTES

1. Differential shut off pressure at max impeller size shall be lower than pump differential pressure X 1.25
   Max suction pressure = Max suction static head + Suction equipment design pressure

PUMP HYDRAULIC CALCULATION SHEET

LOTTE E&C

REV	DATE	BY	CHK'D	APP'D
2	07-Mar-2024	J.H.JUNG	S.K.PARK	C.M.BAE
1	06-Feb-2023	J.H.JUNG	S.K.PARK	C.M.BAE
0	30-Jun-2022	J.H.JUNG	S.K.PARK	C.M.BAE
3	14-Jun-2024	J.H.JUNG	S.K.PARK	C.M.BAE

REVISION

1	PROJECT :	LINE PROJECT	JOB NO. :	15005
2	CLIENT :	PT LOTTE CHEMICAL INDONESIA	DOCU. NO. :	LINE-900-BC-4-0001
3	LOCATION :	CILEGON, INDONESIA	ITEM NO. :	**90-P-423A/B/C**
4	UNIT :	WP5	NO. REQUIRED :	3 (THREE)
5	SERVICE :	**NON AROMATIC TRANSFER PUMPS**	SHEET :	1 OF 4

	FLUID			
7	LIQUID PUMPED		Non-aro Raffinate	
8	OPERATING TEMPERATURE	(℃)	22.7	AMB
9	VISCOSITY @ OP. TEMP.	(cP)	0.435	
10	VAPOR PRESS. @ OP. TEMP.	(kg/cm2A)	0.211	
11	SP. GR. @ OP. TEMP.	(-)	0.707	
12				
13	NORMAL CAPACITY (32 t/h)	(m3/hr)	45	
14	EXCESS RATIO	(%)	10	
15	RATED CAPACITY	(m3/hr)	50	
16	**SUCTION**			
17	PRESS. @ EQUIPMENT	(kg/cm2A) (kg/cm2G)	1.03	0.00
18	MIN. STATIC HEAD	(m)	-0.30	
19	PIPE FRICTION	(kg/cm2)	0.042	
20	STRAINER	(kg/cm2)	0.07	
21		(kg/cm2)		
22		(kg/cm2)		
23				
24	NET SUC. PRESS.	(kg/cm2A) (kg/cm2G)	0.90	-0.1
25	NPSH a @ Suction Nozzle Center	(m)	9.7	
26	**DISCHARGE**			
27	PRESS. @ EQUIP. or BL	(kg/cm2A) (kg/cm2G)	1.03	0.00
28	STATIC HEAD	(m)	25.25	
29	PIPE FRICTION	(kg/cm2)	0.975	
30	FE-4010	(kg/cm2)	0.20	
31	GLOBE VALVE THROTTLING	(kg/cm2)	3.00	
32	FE-4030	(kg/cm2)	0.20	
33		(kg/cm2)		
34		(kg/cm2)		
35		(kg/cm2)		
36		(kg/cm2)		
37				
38	TOTAL DISCH. PRESS.	(kg/cm2A) (kg/cm2G)	7.2	6.2
39	SUC. PRESS.	(kg/cm2A) (kg/cm2G)	0.9	-0.1
40	DIFF. PRESS. (ΔP)	(kg/cm2)	6.3	
41	TOTAL HEAD (NET)	(m)	89	
42	TOTAL HEAD (TAKE)	(m)		
43	DIFF. PRESS. (ΔP) (TAKE)	(kg/cm2)		
44	TOTAL DISCH. PRESS. (TAKE)	(kg/cm2G)		
45				
46				
47				
48	**MAX SHUT OFF PRESSURE (NOTE 1)**			
49	MAX. SUC. STATIC HEAD	(m)		
50	SUC. EQUIP. DESIGN PRESS.	(kg/cm2G)		
51	MAX. SUC. PRESS.	(kg/cm2G)		
52	DIFF. PRESS. (ΔP) (TAKE)	(kg/cm2)		
53	SHUTOFF COEFF.	(%)		
54	MAX. SHUTOFF PRESS.	(kg/cm2G)		

SKETCH

CASE 1 : TRANSFER TO NAPHTHA TANK (GOVERNING)

1 OPERATION + 2 STANDBY, TYPE : HORIZONTAL CENTRIFUGAL

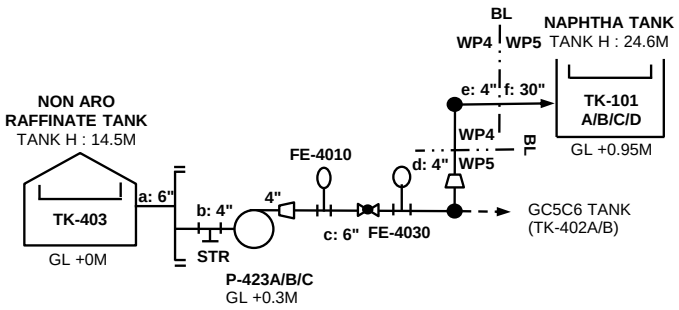

PIPE PRESSURE DROP

PIPING MATERIAL (C.S. or SUS.) : C.S. (1C1P)

		Suction		Discharge			
SECTION		**a**	**b**	**c**	**d**	**e**	**f**
FLOW RATE	(m^3/h)	50	50	50	50	50	50
PIPE ID	(in)	**6**	**4**	**6**	**4**	**4**	**30**
PIPE SCH.	(in)	40	40	40	40	40	STD
PIPE ID	(mm)	154.05	102.26	154.05	102.26	102.26	742.94
ROUGHNESS	(mm)	0.046	0.046	0.046	0.046	0.046	0.046
VELOCITY	(m/s)	**0.744**	**1.689**	**0.744**	**1.689**	**1.689**	**0.032**
REYNOLDS NO.	(-)	186348	280724	186348	280724	280724	38640
FRICTION FACTOR	(-)	0.004	0.005	0.004	0.005	0.005	0.006
ΔP / 100m	(kg/cm^2)	**0.023**	**0.181**	**0.023**	**0.181**	**0.181**	**0.000**
STRAIGHT LENGTH	(m)	59	14	72	324	192	300
NO. OF PIPE ENTRANCE							
NO. OF PIPE EXIT							
NO. OF 90 ELBOW							
NO. OF TEE							
NO. OF GLOBE VALVE				1			
NO. OF GATE VALVE		2	1	1	1	1	2
NO. OF CHECK VALVE				1		1	
NO. OF BUTTER VALVE							
NO. OF BALL VALVE							
NO. OF CONTRACT							
NO. OF ENLARGER							
OTHER Ks							
PIPE ΔP	(kg/cm^2)	0.0136	0.0261	0.0167	0.5869	0.3478	0.0000
FITTING ΔP	(kg/cm^2)	0.0005	0.0014	0.0123	0.0014	0.0097	0.0000
TOTAL ΔP	(kg/cm^2)	**0.0141**	**0.0275**	**0.0290**	**0.5883**	**0.3575**	**0.0000**

NOTES

1. Differential shut off pressure at max impeller size shall be lower than pump differential pressure X 1.25.
   Max suction pressure = Max suction static head + Suction equipment design pressure

: SELECTED DATA FOR PUMP DATASHEET

PUMP HYDRAULIC CALCULATION SHEET

LOTTE E&C

REV	DATE	BY	CHK'D	APP'D
2	07-Mar-2024	J.H.JUNG	S.K.PARK	C.M.BAE
1	06-Feb-2023	J.H.JUNG	S.K.PARK	C.M.BAE
0	30-Jun-2022	J.H.JUNG	S.K.PARK	C.M.BAE
3	14-Jun-2024	J.H.JUNG	S.K.PARK	C.M.BAE

REVISION

1	PROJECT :	LINE PROJECT	JOB NO. :	15005
2	CLIENT :	PT LOTTE CHEMICAL INDONESIA	DOCU. NO. :	LINE-900-BC-4-0001
3	LOCATION :	CILEGON, INDONESIA	ITEM NO. :	**90-P-423A/B/C**
4	UNIT :	WP5	NO. REQUIRED :	3 (THREE)
5	SERVICE :	**NON AROMATIC TRANSFER PUMPS**	SHEET :	2 OF 4

	FLUID			
7	LIQUID PUMPED		Non-aro Raffinate	
8	OPERATING TEMPERATURE	(℃)	22.7	AMB
9	VISCOSITY @ OP. TEMP.	(cP)	0.435	
10	VAPOR PRESS. @ OP. TEMP.	(kg/cm2A)	0.211	
11	SP. GR. @ OP. TEMP.	(-)	0.707	
12				
13	NORMAL CAPACITY (32 t/h)	(m3/hr)	45	
14	EXCESS RATIO	(%)	10	
15	RATED CAPACITY	(m3/hr)	50	
16	**SUCTION**			
17	PRESS. @ EQUIPMENT	(kg/cm2A) (kg/cm2G)	1.03	0.00
18	MIN. STATIC HEAD	(m)	-0.30	
19	PIPE FRICTION	(kg/cm2)	0.042	
20	STRAINER	(kg/cm2)	0.07	
21		(kg/cm2)		
22		(kg/cm2)		
23				
24	NET SUC. PRESS.	(kg/cm2A) (kg/cm2G)	0.90	-0.1
25	NPSH a @ Suction Nozzle Center	(m)	9.7	
26	**DISCHARGE**			
27	PRESS. @ EQUIP. or BL	(kg/cm2A) (kg/cm2G)	1.03	0.00
28	STATIC HEAD	(m)	14.20	
29	PIPE FRICTION	(kg/cm2)	0.445	
30	FE-4010	(kg/cm2)	0.20	
31	FE-4030	(kg/cm2)	0.20	
32	FE-4011	(kg/cm2)	0.20	
33	FV-4011	(kg/cm2)	4.10	
34		(kg/cm2)		
35		(kg/cm2)		
36		(kg/cm2)		
37				
38	TOTAL DISCH. PRESS.	(kg/cm2A) (kg/cm2G)	7.2	6.1
39	SUC. PRESS.	(kg/cm2A) (kg/cm2G)	0.9	-0.1
40	DIFF. PRESS. (ΔP)	(kg/cm2)	6.3	
41	TOTAL HEAD (NET)	(m)	89	
42	TOTAL HEAD (TAKE)	(m)		
43	DIFF. PRESS. (ΔP) (TAKE)	(kg/cm2)		
44	TOTAL DISCH. PRESS. (TAKE)	(kg/cm2G)		
45				
46				
47				
48	**MAX SHUT OFF PRESSURE (NOTE 1)**			
49	MAX. SUC. STATIC HEAD	(m)		
50	SUC. EQUIP. DESIGN PRESS.	(kg/cm2G)		
51	MAX. SUC. PRESS.	(kg/cm2G)		
52	DIFF. PRESS. (ΔP) (TAKE)	(kg/cm2)		
53	SHUTOFF COEFF.	(%)		
54	MAX. SHUTOFF PRESS.	(kg/cm2G)		

SKETCH

CASE 2 : TRANSFER TO GC5C6 TANK

1 OPERATION + 2 STANDBY, TYPE : HORIZONTAL CENTRIFUGAL

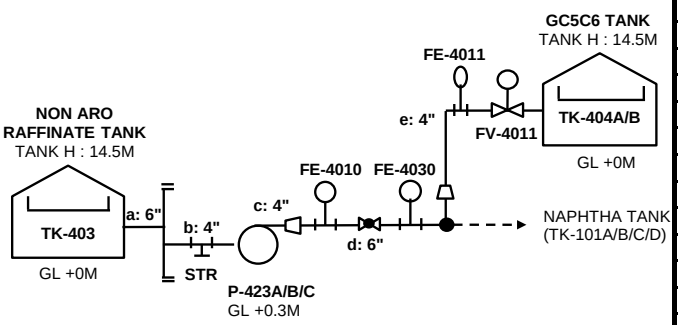

PIPE PRESSURE DROP

PIPING MATERIAL (C.S. or SUS.) : C.S. (1C1P)

		Suction		Discharge		
SECTION		**a**	**b**	**c**	**d**	**e**
FLOW RATE	(m^3/h)	50	50	50	50	50
PIPE ID	(in)	**6**	**4**	**4**	**6**	**4**
PIPE SCH.	(in)	40	40	40	40	40
PIPE ID	(mm)	154.05	102.26	102.26	154.05	102.26
ROUGHNESS	(mm)	0.046	0.046	0.046	0.046	0.046
VELOCITY	(m/s)	**0.744**	**1.689**	**1.689**	**0.744**	**1.691**
REYNOLDS NO.	(-)	186348	280724	280724	186348	281061
FRICTION FACTOR	(-)	0.004	0.005	0.005	0.004	0.005
ΔP / 100m	(kg/cm^2)	**0.023**	**0.181**	**0.181**	**0.023**	**0.182**
STRAIGHT LENGTH	(m)	59	14	6	66	210
NO. OF PIPE ENTRANCE						
NO. OF PIPE EXIT						
NO. OF 90 ELBOW						
NO. OF TEE						
NO. OF GLOBE VALVE					1	
NO. OF GATE VALVE		2	1	1		6
NO. OF CHECK VALVE				1		1
NO. OF BUTTER VALVE						
NO. OF BALL VALVE						
NO. OF CONTRACT						
NO. OF ENLARGER						
OTHER Ks						
PIPE ΔP	(kg/cm^2)	0.0136	0.0261	0.0109	0.0153	0.3813
FITTING ΔP	(kg/cm^2)	0.0005	0.0014	0.0097	0.0106	0.0168
TOTAL ΔP	(kg/cm^2)	**0.0141**	**0.0275**	**0.0206**	**0.0259**	**0.3981**

NOTES

1. Differential shut off pressure at max impeller size shall be lower than pump differential pressure X 1.25.
   Max suction pressure = Max suction static head + Suction equipment design pressure

PUMP HYDRAULIC CALCULATION SHEET

LOTTE E&C

REV	DATE	BY	CHK'D	APP'D
2	07-Mar-2024	J.H.JUNG	S.K.PARK	C.M.BAE
1	06-Feb-2023	J.H.JUNG	S.K.PARK	C.M.BAE
0	30-Jun-2022	J.H.JUNG	S.K.PARK	C.M.BAE
3	14-Jun-2024	J.H.JUNG	S.K.PARK	C.M.BAE

REVISION

1	PROJECT :	LINE PROJECT	JOB NO. :	15005
2	CLIENT :	PT LOTTE CHEMICAL INDONESIA	DOCU. NO. :	LINE-900-BC-4-0001
3	LOCATION :	CILEGON, INDONESIA	ITEM NO. :	**90-P-423A/B/C**
4	UNIT :	WP5	NO. REQUIRED :	3 (THREE)
5	SERVICE :	**NON AROMATIC TRANSFER PUMPS**	SHEET :	3 OF 4

6	**FLUID**			
7	LIQUID PUMPED		Non-aro Raffinate	
8	OPERATING TEMPERATURE	(℃)	22.7	AMB
9	VISCOSITY @ OP. TEMP.	(cP)	0.435	
10	VAPOR PRESS. @ OP. TEMP.	(kg/cm2A)	0.211	
11	SP. GR. @ OP. TEMP.	(-)	0.707	
12				
13	NORMAL CAPACITY (32 t/h)	(m3/hr)	45	
14	EXCESS RATIO	(%)	10	
15	RATED CAPACITY	(m3/hr)	50	
16	**SUCTION**			
17	PRESS. @ EQUIPMENT	(kg/cm2A) (kg/cm2G)	1.03	0.00
18	MIN. STATIC HEAD	(m)	-0.3	
19	PIPE FRICTION	(kg/cm2)	0.143	
20	STRAINER	(kg/cm2)	0.07	
21	MARGIN	(kg/cm2)	0.04	
22		(kg/cm2)		
23				
24	NET SUC. PRESS.	(kg/cm2A) (kg/cm2G)	0.76	-0.3
25	NPSH a @ Suction Nozzle Center	(m)	7.8	
26	**DISCHARGE**			
27	PRESS. @ EQUIP. or BL	(kg/cm2A) (kg/cm2G)	1.53	0.50
28	STATIC HEAD	(m)	9.7	
29	PIPE FRICTION	(kg/cm2)	0.607	
30	FE-4010	(kg/cm2)	0.20	
31	FE-4030	(kg/cm2)	0.20	
32	GLOBE VALVE THROTTLING	(kg/cm2)	2.45	
33	FE-6010	(kg/cm2)	0.39	
34	LOADING ARM ΔP	(kg/cm2)	1.00	
35		(kg/cm2)		
36		(kg/cm2)		
37				
38	TOTAL DISCH. PRESS.	(kg/cm2A) (kg/cm2G)	7.1	6.0
39	SUC. PRESS.	(kg/cm2A) (kg/cm2G)	0.8	-0.3
40	DIFF. PRESS. (ΔP)	(kg/cm2)	6.3	
41	TOTAL HEAD (NET)	(m)	89	
42	TOTAL HEAD (TAKE)	(m)	89	
43	DIFF. PRESS. (ΔP) (TAKE)	(kg/cm2)	6.3	
44	TOTAL DISCH. PRESS. (TAKE)	(kg/cm2G)	6.0	
45				
46				
47				
48	**MAX SHUT OFF PRESSURE (NOTE 1)**			
49	MAX. SUC. STATIC HEAD	(m)	14.20	
50	SUC. EQUIP. DESIGN PRESS.	(kg/cm2G)	0.015	
51	MAX. SUC. PRESS.	(kg/cm2G)	1.0	
52	DIFF. PRESS. (ΔP) (TAKE)	(kg/cm2)	6.31	
53	SHUTOFF COEFF.	(%)	125	
54	MAX. SHUTOFF PRESS.	(kg/cm2G)	8.9	(NOTE 2)

SKETCH

CASE 3 : TRANSFER TO JETTY (GOVERNING)

3 OPERATION, TYPE : HORIZONTAL CENTRIFUGAL

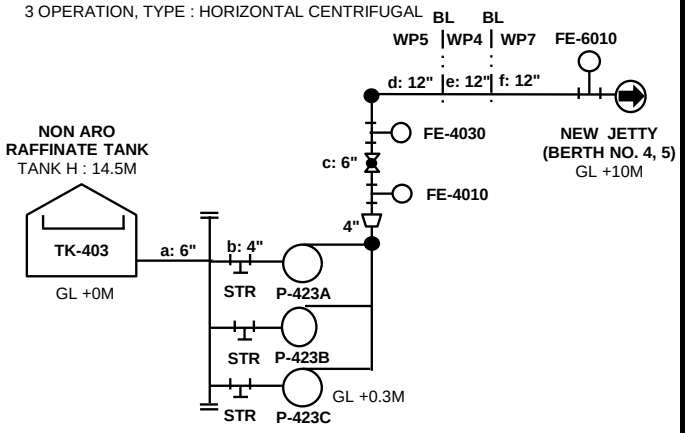

PIPE PRESSURE DROP

PIPING MATERIAL (C.S. or SUS.) : C.S. (1C1P)

		Suction		Discharge			
SECTION		**a**	**b**	**c**	**d**	**e**	**f**
FLOW RATE	(m^3/h)	150	50	150	150	150	150
PIPE ID	(in)	**6**	**4**	**6**	**12**	**12**	**12**
PIPE SCH.	(in)	40	40	40	STD	STD	STD
PIPE ID	(mm)	154.05	102.26	154.05	304.80	304.80	304.80
ROUGHNESS	(mm)	0.046	0.046	0.046	0.046	0.046	0.046
VELOCITY	(m/s)	**2.233**	**1.689**	**2.233**	**0.570**	**0.570**	**0.570**
REYNOLDS NO.	(-)	559043	280724	559043	282548	282548	282548
FRICTION FACTOR	(-)	0.004	0.005	0.004	0.004	0.004	0.004
ΔP / 100m	(kg/cm^2)	**0.188**	**0.181**	**0.188**	**0.006**	**0.006**	**0.006**
STRAIGHT LENGTH	(m)	59	14	138	324	1044	1692
NO. OF PIPE ENTRANCE							
NO. OF PIPE EXIT							
NO. OF 90 ELBOW				7	10		
NO. OF TEE							
NO. OF GLOBE VALVE				1			
NO. OF GATE VALVE		2	1	2			4
NO. OF CHECK VALVE				2			1
NO. OF BUTTER VALVE							
NO. OF BALL VALVE							
NO. OF CONTRACT							
NO. OF ENLARGER							
OTHER Ks							
PIPE ΔP	(kg/cm^2)	0.1107	0.0261	0.2598	0.0199	0.0642	0.1041
FITTING ΔP	(kg/cm^2)	0.0045	0.0014	0.1548	0.0026	0.0000	0.0013
TOTAL ΔP	(kg/cm^2)	**0.1153**	**0.0275**	**0.4146**	**0.0225**	**0.0642**	**0.1054**

NOTES

1. Differential shut off pressure at max impeller size shall be lower than pump differential pressure X 1.25.
   Max suction pressure = Max suction static head + Suction equipment design pressure
2. Downstream design pressure is applied as 9.2 kg/cm2g.

: SELECTED DATA FOR PUMP DATASHEET

PUMP HYDRAULIC CALCULATION SHEET

LOTTE E&C

REV	DATE	BY	CHK'D	APP'D
2	07-Mar-2024	J.H.JUNG	S.K.PARK	C.M.BAE
1	06-Feb-2023	J.H.JUNG	S.K.PARK	C.M.BAE
0	30-Jun-2022	J.H.JUNG	S.K.PARK	C.M.BAE
3	14-Jun-2024	J.H.JUNG	S.K.PARK	C.M.BAE

REVISION

1	PROJECT :	LINE PROJECT	JOB NO. :	15005
2	CLIENT :	PT LOTTE CHEMICAL INDONESIA	DOCU. NO. :	LINE-900-BC-4-0001
3	LOCATION :	CILEGON, INDONESIA	ITEM NO. :	**90-P-423A/B/C**
4	UNIT :	WP5	NO. REQUIRED :	3 (THREE)
5	SERVICE :	**NON AROMATIC TRANSFER PUMPS**	SHEET :	4 OF 4

	FLUID		
7	LIQUID PUMPED		Non-aro Raffinate
8	OPERATING TEMPERATURE	(℃)	22.7 AMB
9	VISCOSITY @ OP. TEMP.	(cP)	0.435
10	VAPOR PRESS. @ OP. TEMP.	(kg/cm2A)	0.211
11	SP. GR. @ OP. TEMP.	(-)	0.707
12			
13	NORMAL CAPACITY	(m3/hr)	45
14	EXCESS RATIO	(%)	10
15	RATED CAPACITY	(m3/hr)	50
16	**SUCTION**		
17	PRESS. @ EQUIPMENT	(kg/cm2A) (kg/cm2G)	
18	MIN. STATIC HEAD	(m)	
19	PIPE FRICTION	(kg/cm2)	
20		(kg/cm2)	
21		(kg/cm2)	
22		(kg/cm2)	
23			
24	NET SUC. PRESS.	(kg/cm2A) (kg/cm2G)	
25	NPSH a @ Suction Nozzle Center	(m)	
26	**DISCHARGE**		
27	PRESS. @ EQUIP. or BL	(kg/cm2A) (kg/cm2G)	
28	STATIC HEAD	(m)	
29	PIPE FRICTION	(kg/cm2)	
30		(kg/cm2)	
31		(kg/cm2)	
32		(kg/cm2)	
33		(kg/cm2)	
34		(kg/cm2)	
35		(kg/cm2)	
36		(kg/cm2)	
37			
38	TOTAL DISCH. PRESS.	(kg/cm2A) (kg/cm2G)	
39	SUC. PRESS.	(kg/cm2A) (kg/cm2G)	
40	DIFF. PRESS. (ΔP)	(kg/cm2)	
41	TOTAL HEAD (NET)	(m)	
42	TOTAL HEAD (TAKE)	(m)	
43	DIFF. PRESS. (ΔP) (TAKE)	(kg/cm2)	
44	TOTAL DISCH. PRESS. (TAKE)	(kg/cm2G)	
45			
46			
47			
48	**MAX SHUT OFF PRESSURE (NOTE 1)**		
49	MAX. SUC. STATIC HEAD	(m)	
50	SUC. EQUIP. DESIGN PRESS.	(kg/cm2G)	
51	MAX. SUC. PRESS.	(kg/cm2G)	
52	DIFF. PRESS. (ΔP) (TAKE)	(kg/cm2)	
53	SHUTOFF COEFF.	(%)	
54	MAX. SHUTOFF PRESS.	(kg/cm2G)	

SKETCH

PUMP MINIMUM FLOW LINE

3 OPERATION + 0 STANDBY, TYPE : HORIZONTAL CENTRIFUGAL

MINIMUM FLOWRATE IS VENDOR DATA.

PUMP MINIMUM FLOWRATE =	48	m3/hr	
PUMP DISCH. P. AS PER CURVE =	7.7	kg/cm2g	(1)
SUCTION EQUIPMENT PRESS. =	0.00	kg/cm2g	(2)
SUCTION EQUIPMENT HEAD =	14.5	m	
	1.03	kg/cm2	(3)
PIPE FRICTION =	0.34	kg/cm2	(4)
FE-4010 DEL P =	0.20	kg/cm2	(5)
OTHERS DEL P =		kg/cm2	(6)
OTHERS DEL P =		kg/cm2	(7)
FV-4010 DEL P =	**6.2**	**kg/cm2**	(8)

(8) = (1) - (2) - (3) - (4) - (5) - (6) - (7)

PIPE PRESSURE DROP

PIPING MATERIAL (C.S. or SUS.) : C.S. (1C1P)

		Suction		Discharge			
SECTION				**a**			
FLOW RATE	(m^3/h)			48			
PIPE ID	(in)			4			
PIPE SCH.	(in)			40			
PIPE ID	(mm)			102.26			
ROUGHNESS	(mm)			0.046			
VELOCITY	(m/s)			**1.623**			
REYNOLDS NO.	(-)			269819			
FRICTION FACTOR	(-)			0.005			
ΔP / 100m	(kg/cm^2)			**0.168**			
STRAIGHT LENGTH	(m)			200			
NO. OF PIPE ENTRANCE							
NO. OF PIPE EXIT							
NO. OF 90 ELBOW							
NO. OF TEE							
NO. OF GLOBE VALVE							
NO. OF GATE VALVE							
NO. OF CHECK VALVE							
NO. OF BUTTER VALVE							
NO. OF BALL VALVE							
NO. OF CONTRACT							
NO. OF ENLARGER							
OTHER Ks							
PIPE ΔP	(kg/cm^2)			0.3358			
FITTING ΔP	(kg/cm^2)			0.0000			
TOTAL ΔP	(kg/cm^2)			**0.3358**			

NOTES

1. Differential shut off pressure at max impeller size shall be lower than pump differential pressure X 1.25.
   Max suction pressure = Max suction static head + Suction equipment design pressure

PUMP HYDRAULIC CALCULATION SHEET

LOTTE E&C

REV	DATE	BY	CHK'D	APP'D
2	07-Mar-2024	J.H.JUNG	S.K.PARK	C.M.BAE
1	06-Feb-2023	J.H.JUNG	S.K.PARK	C.M.BAE
0	30-Jun-2022	J.H.JUNG	S.K.PARK	C.M.BAE
3	14-Jun-2024	J.H.JUNG	S.K.PARK	C.M.BAE

REVISION

1	PROJECT :	LINE PROJECT	JOB NO. :	15005
2	CLIENT :	PT LOTTE CHEMICAL INDONESIA	DOCU. NO. :	LINE-900-BC-4-0001
3	LOCATION :	CILEGON, INDONESIA	ITEM NO. :	**90-P-428A/B**
4	UNIT :	WP5	NO. REQUIRED :	2 (TWO)
5	SERVICE :	**C9+ TRANSFER PUMPS**	SHEET :	1 OF 3

	FLUID			
7	LIQUID PUMPED		C9+	
8	OPERATING TEMPERATURE	(℃)	22.7	AMB
9	VISCOSITY @ OP. TEMP.	(cP)	1.304	
10	VAPOR PRESS. @ OP. TEMP.	(kg/cm2A)	0.069	
11	SP. GR. @ OP. TEMP.	(-)	0.933	
12				
13	NORMAL CAPACITY (20 t/h)	(m3/hr)	21	
14	EXCESS RATIO	(%)	10	
15	RATED CAPACITY	(m3/hr)	24	
16	**SUCTION**			
17	PRESS. @ EQUIPMENT	(kg/cm2A) (kg/cm2G)	1.03	0.00
18	MIN. STATIC HEAD	(m)	-0.30	
19	PIPE FRICTION	(kg/cm2)	0.116	
20	STRAINER	(kg/cm2)	0.07	
21		(kg/cm2)		
22		(kg/cm2)		
23				
24	NET SUC. PRESS.	(kg/cm2A) (kg/cm2G)	0.819	-0.2
25	NPSH a @ Suction Nozzle Cente	(CAL,) (TAKE) (m)	8.0	
26	**DISCHARGE**			
27	PRESS. @ EQUIP. or BL	(kg/cm2A) (kg/cm2G)	4.03	3.00
28	STATIC HEAD	(m)	4.7	
29	PIPE FRICTION	(kg/cm2)	1.338	
30	FE-4027	(kg/cm2)	0.20	
31	MARGIN	(kg/cm2)	0.53	
32		(kg/cm2)		
33		(kg/cm2)		
34		(kg/cm2)		
35		(kg/cm2)		
36		(kg/cm2)		
37				
38	TOTAL DISCH. PRESS.	(kg/cm2A) (kg/cm2G)	6.5	5.5
39	SUC. PRESS.	(kg/cm2A) (kg/cm2G)	0.8	-0.2
40	DIFF. PRESS. (ΔP)	(kg/cm2)	5.7	
41	TOTAL HEAD (NET)	(m)	61	
42	TOTAL HEAD (TAKE)	(m)	61	
43	DIFF. PRESS. (ΔP) (TAKE)	(kg/cm2)	5.7	
44	TOTAL DISCH. PRESS. (TAKE)	(kg/cm2G)	5.5	
45				
46				
47				
48	**MAX SHUT OFF PRESSURE (NOTE 1)**			
49	MAX. SUC. STATIC HEAD	(m)	14.2	
50	SUC. EQUIP. DESIGN PRESS.	(kg/cm2G)	0.015	
51	MAX. SUC. PRESS.	(kg/cm2G)	1.3	
52	DIFF. PRESS. (ΔP) (TAKE)	(kg/cm2)	5.69	
53	SHUTOFF COEFF.	(%)	125	
54	MAX. SHUTOFF PRESS.	(kg/cm2G)	8.5	

SKETCH

CASE 1 : C9+ TO NCC (GOVERNING)

1 OPERATION + 1 STANDBY, TYPE : HORIZONTAL CENTRIFUGAL

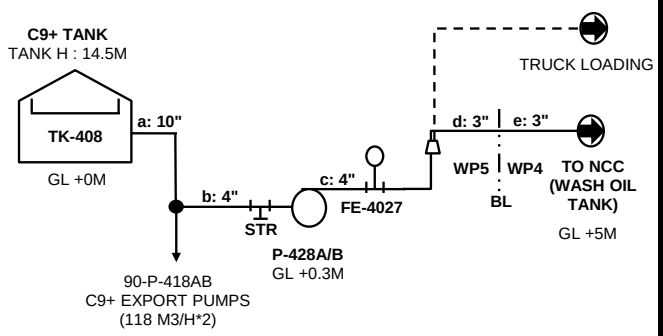

PIPE PRESSURE DROP

PIPING MATERIAL (C.S. or SUS.) : C.S. (1C1P)

		Suction		Discharge		
SECTION		**a**	**b**	**c**	**d**	**e**
FLOW RATE	(m^3/h)	260	24	24	24	24
PIPE ID	(in)	**10**	**4**	**4**	**3**	**3**
PIPE SCH.	(in)	40	40	40	40	40
PIPE ID	(mm)	254.51	102.26	102.26	77.93	77.93
ROUGHNESS	(mm)	0.046	0.046	0.046	0.046	0.046
VELOCITY	(m/s)	**1.417**	**0.796**	**0.796**	**1.371**	**1.371**
REYNOLDS NO.	(-)	258054	58252	58252	76439	76439
FRICTION FACTOR	(-)	0.004	0.005	0.005	0.005	0.005
ΔP / 100m	(kg/cm^2)	**0.062**	**0.064**	**0.064**	**0.246**	**0.246**
STRAIGHT LENGTH	(m)	173	10	10	372	168
NO. OF PIPE ENTRANCE						
NO. OF PIPE EXIT						
NO. OF 90 ELBOW						
NO. OF TEE						
NO. OF GLOBE VALVE						
NO. OF GATE VALVE		2	1	1	1	
NO. OF CHECK VALVE				1		
NO. OF BUTTER VALVE						
NO. OF BALL VALVE						
NO. OF CONTRACT						
NO. OF ENLARGER						
OTHER Ks						
PIPE ΔP	(kg/cm^2)	0.1068	0.0062	0.0064	0.9146	0.4131
FITTING ΔP	(kg/cm^2)	0.0022	0.0004	0.0029	0.0013	0.0000
TOTAL ΔP	(kg/cm^2)	**0.1090**	**0.0066**	**0.0093**	**0.9160**	**0.4131**

NOTES

1. Differential shut off pressure at max impeller size shall be lower than pump differential pressure X 1.25.
   Max suction pressure = Max suction static head + Suction equipment design pressure

PUMP HYDRAULIC CALCULATION SHEET

LOTTE E&C

REV	DATE	BY	CHK'D	APP'D
2	07-Mar-2024	J.H.JUNG	S.K.PARK	C.M.BAE
1	06-Feb-2023	J.H.JUNG	S.K.PARK	C.M.BAE
0	30-Jun-2022	J.H.JUNG	S.K.PARK	C.M.BAE
3	14-Jun-2024	J.H.JUNG	S.K.PARK	C.M.BAE

REVISION

1	PROJECT :	LINE PROJECT	JOB NO. :	15005
2	CLIENT :	PT LOTTE CHEMICAL INDONESIA	DOCU. NO. :	LINE-900-BC-4-0001
3	LOCATION :	CILEGON, INDONESIA	ITEM NO. :	**90-P-428A/B**
4	UNIT :	WP5	NO. REQUIRED :	2 (TWO)
5	SERVICE :	**C9+ TRANSFER PUMPS**	SHEET :	2 OF 3

6	**FLUID**			
7	LIQUID PUMPED		C9+	
8	OPERATING TEMPERATURE	(℃)	22.7	AMB
9	VISCOSITY @ OP. TEMP.	(cP)	1.304	
10	VAPOR PRESS. @ OP. TEMP.	(kg/cm2A)	0.069	
11	SP. GR. @ OP. TEMP.	(-)	0.933	
12				
13	NORMAL CAPACITY (20 t/h)	(m3/hr)	21	
14	EXCESS RATIO	(%)	10	
15	RATED CAPACITY	(m3/hr)	24	
16	**SUCTION**			
17	PRESS. @ EQUIPMENT	(kg/cm2A) (kg/cm2G)	1.03	0.00
18	MIN. STATIC HEAD	(m)	-0.30	
19	PIPE FRICTION	(kg/cm2)	0.133	
20	STRAINER	(kg/cm2)	0.07	
21		(kg/cm2)		
22		(kg/cm2)		
23				
24	NET SUC. PRESS.	(kg/cm2A) (kg/cm2G)	0.802	-0.2
25	NPSH a @ Suction Nozzle Center	(m)	7.9	
26	**DISCHARGE**			
27	PRESS. @ EQUIP. or BL	(kg/cm2A) (kg/cm2G)	1.53	0.50
28	STATIC HEAD	(m)	4.7	
29	PIPE FRICTION	(kg/cm2)	0.464	
30	FE-4027	(kg/cm2)	0.20	
31	LOADING ARM DEL P	(kg/cm2)	1.00	
32		(kg/cm2)		
33		(kg/cm2)		
34		(kg/cm2)		
35		(kg/cm2)		
36		(kg/cm2)		
37				
38	TOTAL DISCH. PRESS.	(kg/cm2A) (kg/cm2G)	3.6	2.6
39	SUC. PRESS.	(kg/cm2A) (kg/cm2G)	0.8	-0.2
40	DIFF. PRESS. (ΔP)	(kg/cm2)	2.8	
41	TOTAL HEAD (NET)	(m)	30	
42	TOTAL HEAD (TAKE)	(m)		
43	DIFF. PRESS. (ΔP) (TAKE)	(kg/cm2)		
44	TOTAL DISCH. PRESS. (TAKE)	(kg/cm2G)		
45				
46				
47				
48	**MAX SHUT OFF PRESSURE (NOTE 1)**			
49	MAX. SUC. STATIC HEAD	(m)		
50	SUC. EQUIP. DESIGN PRESS.	(kg/cm2G)		
51	MAX. SUC. PRESS.	(kg/cm2G)		
52	DIFF. PRESS. (ΔP) (TAKE)	(kg/cm2)		
53	SHUTOFF COEFF.	(%)		
54	MAX. SHUTOFF PRESS.	(kg/cm2G)		

SKETCH

CASE 2 : C9+ TO TRUCK LOADING ARM

2 OPERATION + 0 STANDBY, TYPE : HORIZONTAL CENTRIFUGAL

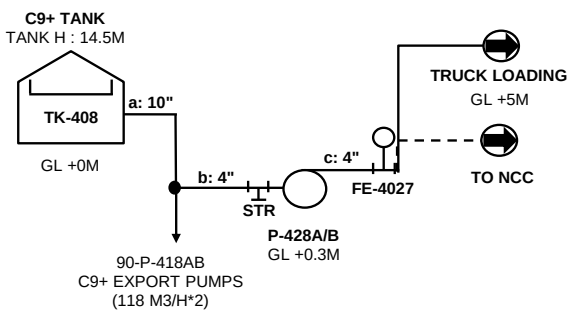

PIPE PRESSURE DROP

PIPING MATERIAL (C.S. or SUS.) : C.S. (1C1P)

		Suction		Discharge			
SECTION		**a**	**b**	**c**			
FLOW RATE	(m^3/h)	260	47	47			
PIPE ID	(in)	**10**	**4**	**4**			
PIPE SCH.	(in)	40	40	40			
PIPE ID	(mm)	254.51	102.26	102.26			
ROUGHNESS	(mm)	0.046	0.046	0.046			
VELOCITY	(m/s)	**1.417**	**1.592**	**1.592**			
REYNOLDS NO.	(-)	258054	116504	116504			
FRICTION FACTOR	(-)	0.004	0.005	0.005			
ΔP / 100m	(kg/cm^2)	**0.062**	**0.233**	**0.233**			
STRAIGHT LENGTH	(m)	173	10	191			
NO. OF PIPE ENTRANCE							
NO. OF PIPE EXIT							
NO. OF 90 ELBOW							
NO. OF TEE							
NO. OF GLOBE VALVE							
NO. OF GATE VALVE		2	1	6			
NO. OF CHECK VALVE				1			
NO. OF BUTTER VALVE							
NO. OF BALL VALVE							
NO. OF CONTRACT							
NO. OF ENLARGER							
OTHER Ks							
PIPE ΔP	(kg/cm^2)	0.1068	0.0223	0.4439			
FITTING ΔP	(kg/cm^2)	0.0022	0.0017	0.0197			
TOTAL ΔP	(kg/cm^2)	**0.1090**	**0.0240**	**0.4635**			

NOTES

1. Differential shut off pressure at max impeller size shall be lower than pump differential pressure X 1.3.
   Max suction pressure = Max suction static head + Suction equipment design pressure

PUMP HYDRAULIC CALCULATION SHEET

LOTTE E&C

REV	DATE	BY	CHK'D	APP'D
2	07-Mar-2024	J.H.JUNG	S.K.PARK	C.M.BAE
1	06-Feb-2023	J.H.JUNG	S.K.PARK	C.M.BAE
0	30-Jun-2022	J.H.JUNG	S.K.PARK	C.M.BAE
3	14-Jun-2024	J.H.JUNG	S.K.PARK	C.M.BAE

REVISION

1	PROJECT :	LINE PROJECT	JOB NO. :	15005
2	CLIENT :	PT LOTTE CHEMICAL INDONESIA	DOCU. NO. :	LINE-900-BC-4-0001
3	LOCATION :	CILEGON, INDONESIA	ITEM NO. :	**90-P-428A/B**
4	UNIT :	WP5	NO. REQUIRED :	2 (TWO)
5	SERVICE :	**C9+ TRANSFER PUMPS**	SHEET :	3 OF 3

	FLUID		
7	LIQUID PUMPED		C9+
8	OPERATING TEMPERATURE	(℃)	22.7 AMB
9	VISCOSITY @ OP. TEMP.	(cP)	1.304
10	VAPOR PRESS. @ OP. TEMP.	(kg/cm2A)	0.069
11	SP. GR. @ OP. TEMP.	(-)	0.933
12			
13	NORMAL CAPACITY (20 t/h)	(m3/hr)	21
14	EXCESS RATIO	(%)	10
15	RATED CAPACITY	(m3/hr)	24
16	**SUCTION**		
17	PRESS. @ EQUIPMENT	(kg/cm2A) (kg/cm2G)	
18	MIN. STATIC HEAD	(m)	
19	PIPE FRICTION	(kg/cm2)	
20		(kg/cm2)	
21		(kg/cm2)	
22		(kg/cm2)	
23			
24	NET SUC. PRESS.	(kg/cm2A) (kg/cm2G)	
25	NPSH a @ Suction Nozzle Cente	(CAL,) (TAKE) (m)	
26	**DISCHARGE**		
27	PRESS. @ EQUIP. or BL	(kg/cm2A) (kg/cm2G)	
28	STATIC HEAD	(m)	
29	PIPE FRICTION	(kg/cm2)	
30		(kg/cm2)	
31		(kg/cm2)	
32		(kg/cm2)	
33		(kg/cm2)	
34		(kg/cm2)	
35		(kg/cm2)	
36		(kg/cm2)	
37			
38	TOTAL DISCH. PRESS.	(kg/cm2A) (kg/cm2G)	
39	SUC. PRESS.	(kg/cm2A) (kg/cm2G)	
40	DIFF. PRESS. (ΔP)	(kg/cm2)	
41	TOTAL HEAD (NET)	(m)	
42	TOTAL HEAD (TAKE)	(m)	
43	DIFF. PRESS. (ΔP) (TAKE)	(kg/cm2)	
44	TOTAL DISCH. PRESS. (TAKE)	(kg/cm2G)	
45			
46			
47			
48	**MAX SHUT OFF PRESSURE (NOTE 1)**		
49	MAX. SUC. STATIC HEAD	(m)	
50	SUC. EQUIP. DESIGN PRESS.	(kg/cm2G)	
51	MAX. SUC. PRESS.	(kg/cm2G)	
52	DIFF. PRESS. (ΔP) (TAKE)	(kg/cm2)	
53	SHUTOFF COEFF.	(%)	
54	MAX. SHUTOFF PRESS.	(kg/cm2G)	

SKETCH

PUMP MINIMUM FLOW LINE

1 OPERATION + 1 STANDBY, TYPE : HORIZONTAL CENTRIFUGAL

MINIMUM FLOWRATE IS VENDOR DATA.

PUMP MINIMUM FLOWRATE =	9	m3/hr	
PUMP DISCH. P. AS PER CURVE =	6.7	kg/cm2g	(1)
SUCTION EQUIPMENT PRESS. =	0.00	kg/cm2g	(2)
SUCTION EQUIPMENT HEAD =	14.5	m	
	1.35	kg/cm2	(3)
PIPE FRICTION =	0.08	kg/cm2	(4)
FE-4027 DEL P =	0.20	kg/cm2	(5)
OTHERS DEL P =		kg/cm2	(6)
OTHERS DEL P =		kg/cm2	(7)
FV-4027 DEL P =	**5.1**	**kg/cm2**	(8)

(8) = (1) - (2) - (3) - (4) - (5) - (6) - (7)

PIPE PRESSURE DROP

PIPING MATERIAL (C.S. or SUS.) : C.S. (1C1P)

		Suction		Discharge			
SECTION				**a**			
FLOW RATE	(m^3/h)			9			
PIPE ID	(in)			3			
PIPE SCH.	(in)			40			
PIPE ID	(mm)			77.93			
ROUGHNESS	(mm)			0.046			
VELOCITY	(m/s)			**0.524**			
REYNOLDS NO.	(-)			29225			
FRICTION FACTOR	(-)			0.006			
ΔP / 100m	(kg/cm^2)			**0.042**			
STRAIGHT LENGTH	(m)			200			
NO. OF PIPE ENTRANCE							
NO. OF PIPE EXIT							
NO. OF 90 ELBOW							
NO. OF TEE							
NO. OF GLOBE VALVE							
NO. OF GATE VALVE							
NO. OF CHECK VALVE							
NO. OF BUTTER VALVE							
NO. OF BALL VALVE							
NO. OF CONTRACT							
NO. OF ENLARGER							
OTHER Ks							
PIPE ΔP	(kg/cm^2)			0.0843			
FITTING ΔP	(kg/cm^2)			0.0000			
TOTAL ΔP	(kg/cm^2)			**0.0843**			

NOTES

1. Differential shut off pressure at max impeller size shall be lower than pump differential pressure X 1.25.
   Max suction pressure = Max suction static head + Suction equipment design pressure

PUMP HYDRAULIC CALCULATION SHEET

LOTTE E&C

REV	DATE	BY	CHK'D	APP'D
2	07-Mar-2024	J.H.JUNG	S.K.PARK	C.M.BAE
1	06-Feb-2023	J.H.JUNG	S.K.PARK	C.M.BAE
0	30-Jun-2022	J.H.JUNG	S.K.PARK	C.M.BAE
3	14-Jun-2024	J.H.JUNG	S.K.PARK	C.M.BAE

REVISION

1	PROJECT :	LINE PROJECT	JOB NO. :	15005
2	CLIENT :	PT LOTTE CHEMICAL INDONESIA	DOCU. NO. :	LINE-900-BC-4-0001
3	LOCATION :	CILEGON, INDONESIA	ITEM NO. :	**90-P-429A/B**
4	UNIT :	WP5	NO. REQUIRED :	2 (TWO)
5	SERVICE :	**PFO TRANSFER PUMPS**	SHEET :	1 OF 4

	FLUID			
7	LIQUID PUMPED		PFO	
8	OPERATING TEMPERATURE	(℃)	90.0	
9	VISCOSITY @ OP. TEMP.	(cP)	6.63	
10	VAPOR PRESS. @ OP. TEMP.	(kg/cm2A)	0.2	
11	SP. GR. @ OP. TEMP.	(-)	1.060	
12				
13	NORMAL CAPACITY (50 t/h)	(m3/hr)	47	
14	EXCESS RATIO	(%)	10	
15	RATED CAPACITY	(m3/hr)	52	
16	**SUCTION**			
17	PRESS. @ EQUIPMENT	(kg/cm2A) (kg/cm2G)	1.03	0.00
18	MIN. STATIC HEAD	(m)	-0.30	
19	PIPE FRICTION	(kg/cm2)	0.247	
20	STRAINER	(kg/cm2)	0.07	
21				
22				
23				
24	NET SUC. PRESS.	(kg/cm2A) (kg/cm2G)	0.684	-0.3
25	NPSH a @ Suction Nozzle Center	(m)	4.6	
26	**DISCHARGE**			
27	PRESS. @ EQUIP. or BL	(kg/cm2A) (kg/cm2G)	6.03	5.00
28	STATIC HEAD	(m)	4.7	
29	PIPE FRICTION	(kg/cm2)	1.266	
30	FE-4028	(kg/cm2)	0.20	
31	FE-4031	(kg/cm2)	0.20	
32	MARGIN	(kg/cm2)	0.10	
33		(kg/cm2)		
34		(kg/cm2)		
35		(kg/cm2)		
36		(kg/cm2)		
37				
38	TOTAL DISCH. PRESS.	(kg/cm2A) (kg/cm2G)	8.3	7.3
39	SUC. PRESS.	(kg/cm2A) (kg/cm2G)	0.7	-0.3
40	DIFF. PRESS. (ΔP)	(kg/cm2)	7.6	
41	TOTAL HEAD (NET)	(m)	72	
42	TOTAL HEAD (TAKE)	(m)	72	
43	DIFF. PRESS. (ΔP) (TAKE)	(kg/cm2)	7.6	
44	TOTAL DISCH. PRESS. (TAKE)	(kg/cm2G)	7.3	
45				
46				
47				
48	**MAX SHUT OFF PRESSURE (NOTE 1)**			
49	MAX. SUC. STATIC HEAD	(m)	14.2	
50	SUC. EQUIP. DESIGN PRESS.	(kg/cm2G)	0.015	
51	MAX. SUC. PRESS.	(kg/cm2G)	1.5	
52	DIFF. PRESS. (ΔP) (TAKE)	(kg/cm2)	7.6	
53	SHUTOFF COEFF.	(%)	125	
54	MAX. SHUTOFF PRESS.	(kg/cm2G)	11.1	

SKETCH

CASE 1 : QUENCH OIL TO NCC DURING START UP (GOVERNING)

2 OPERATION + 0 STANDBY, TYPE : HORIZONTAL CENTRIFUGAL

*** QUENCH OIL FLOWRATE TO NCC = 110 T/H

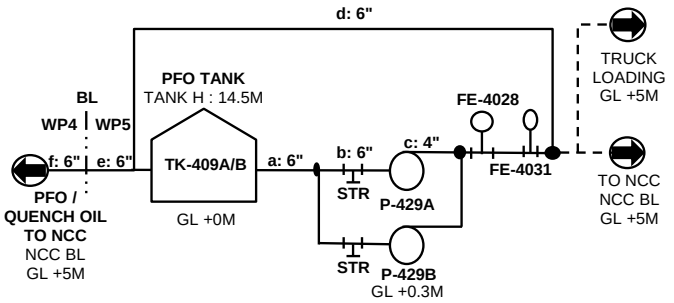

PIPE PRESSURE DROP

PIPING MATERIAL (C.S. or SUS.) : C.S. (1C1P)

		Suction		Discharge			
SECTION		**a**	**b**	**c**	**d**	**e**	**f**
FLOW RATE	(m^3/h)	104	52	52	104	104	104
PIPE ID	(in)	6	6	4	6	6	6
PIPE SCH.	(in)	40	40	40	40	40	40
PIPE ID	(mm)	154.05	154.05	102.26	154.05	154.05	154.05
ROUGHNESS	(mm)	0.046	0.046	0.046	0.046	0.046	0.046
VELOCITY	(m/s)	**1.547**	**0.773**	**1.755**	**1.547**	**1.620**	**1.547**
REYNOLDS NO.	(-)	38091	19046	28691	38091	38091	38091
FRICTION FACTOR	(-)	0.006	0.007	0.006	0.006	0.006	0.006
ΔP / 100m	(kg/cm^2)	**0.194**	**0.056**	**0.405**	**0.194**	**0.203**	**0.194**
STRAIGHT LENGTH	(m)	111	50	12	48	384	168
NO. OF PIPE ENTRANCE							
NO. OF PIPE EXIT							
NO. OF 90 ELBOW							
NO. OF TEE							
NO. OF GLOBE VALVE							
NO. OF GATE VALVE		2	1	1	1		
NO. OF CHECK VALVE				1			
NO. OF BUTTER VALVE							
NO. OF BALL VALVE							
NO. OF CONTRACT							
NO. OF ENLARGER							
OTHER Ks							
PIPE ΔP	(kg/cm^2)	0.2154	0.0282	0.0486	0.0932	0.7806	0.3260
FITTING ΔP	(kg/cm^2)	0.0033	0.0004	0.0157	0.0016	0.0000	0.0000
TOTAL ΔP	(kg/cm^2)	**0.2187**	**0.0286**	**0.0644**	**0.0948**	**0.7806**	**0.3260**

NOTES

1. Differential shut off pressure at max impeller size shall be lower than pump differential pressure X 1.25.
   Max suction pressure = Max suction static head + Suction equipment design pressure

: SELECTED DATA FOR PUMP DATASHEET

PUMP HYDRAULIC CALCULATION SHEET

LOTTE E&C

REV	DATE	BY	CHK'D	APP'D
2	07-Mar-2024	J.H.JUNG	S.K.PARK	C.M.BAE
1	06-Feb-2023	J.H.JUNG	S.K.PARK	C.M.BAE
0	30-Jun-2022	J.H.JUNG	S.K.PARK	C.M.BAE
3	14-Jun-2024	J.H.JUNG	S.K.PARK	C.M.BAE

REVISION

1	PROJECT :	LINE PROJECT	JOB NO. :	15005
2	CLIENT :	PT LOTTE CHEMICAL INDONESIA	DOCU. NO. :	LINE-900-BC-4-0001
3	LOCATION :	CILEGON, INDONESIA	ITEM NO. :	**90-P-429A/B**
4	UNIT :	WP5	NO. REQUIRED :	2 (TWO)
5	SERVICE :	**PFO TRANSFER PUMPS**	SHEET :	2 OF 4

	FLUID				
7	LIQUID PUMPED			PFO	
8	OPERATING TEMPERATURE		(℃)	90.0	
9	VISCOSITY @ OP. TEMP.		(cP)	6.63	
10	VAPOR PRESS. @ OP. TEMP.		(kg/cm2A)	0.2	
11	SP. GR. @ OP. TEMP.		(-)	1.060	
12					
13	NORMAL CAPACITY	(50 t/h)	(m3/hr)	47	
14	EXCESS RATIO		(%)	10	
15	RATED CAPACITY		(m3/hr)	52	
16	**SUCTION**				
17	PRESS. @ EQUIPMENT	(kg/cm2A)	(kg/cm2G)	1.03	0.00
18	MIN. STATIC HEAD		(m)	-0.30	
19	PIPE FRICTION		(kg/cm2)	0.006	
20	STRAINER		(kg/cm2)	0.07	
21					
22					
23					
24	NET SUC. PRESS.	(kg/cm2A)	(kg/cm2G)	0.925	-0.1
25	NPSH a @ Suction Nozzle Center		(m)	6.8	
26	**DISCHARGE**				
27	PRESS. @ EQUIP. or BL	(kg/cm2A)	(kg/cm2G)	3.53	2.50
28	STATIC HEAD		(m)	4.7	
29	PIPE FRICTION		(kg/cm2)	0.201	
30	FE-4028		(kg/cm2)	0.20	
31	FE-4031		(kg/cm2)	0.20	
32	STB-4001A/B		(kg/cm2)	0.07	
33	FE-4032		(kg/cm2)	0.20	
34			(kg/cm2)		
35			(kg/cm2)		
36			(kg/cm2)		
37					
38	TOTAL DISCH. PRESS.	(kg/cm2A)	(kg/cm2G)	4.9	3.9
39	SUC. PRESS.	(kg/cm2A)	(kg/cm2G)	0.9	-0.1
40	DIFF. PRESS. (ΔP)		(kg/cm2)	4.0	
41	TOTAL HEAD (NET)		(m)	38	
42	TOTAL HEAD (TAKE)		(m)		
43	DIFF. PRESS. (ΔP) (TAKE)		(kg/cm2)		
44	TOTAL DISCH. PRESS. (TAKE)		(kg/cm2G)		
45					
46					
47					
48	**MAX SHUT OFF PRESSURE (NOTE 1)**				
49	MAX. SUC. STATIC HEAD		(m)		
50	SUC. EQUIP. DESIGN PRESS.		(kg/cm2G)		
51	MAX. SUC. PRESS.		(kg/cm2G)		
52	DIFF. PRESS. (ΔP) (TAKE)		(kg/cm2)		
53	SHUTOFF COEFF.		(%)		
54	MAX. SHUTOFF PRESS.		(kg/cm2G)		

SKETCH

CASE 2 : TRANSFER TO NCC (FUEL OIL DAY TANK)

1 OPERATION + 1 STANDBY, TYPE : HORIZONTAL CENTRIFUGAL

***** NCC FEED FLOWRATE = 11 m3/h**

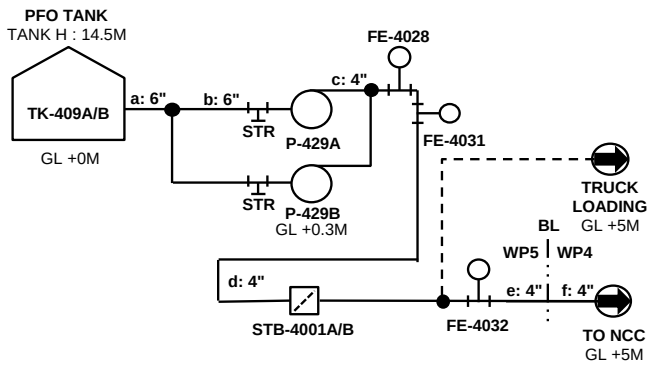

PIPE PRESSURE DROP

PIPING MATERIAL (C.S. or SUS.) : C.S. (1C1P)

		Suction		Discharge			
SECTION		**a**	**b**	**c**	**d**	**e**	**f**
FLOW RATE	(m^3/h)	11	11	11	11	11	11
PIPE ID	(in)	6	6	4	4	4	4
PIPE SCH.	(in)	40	40	40	40	40	40
PIPE ID	(mm)	154.05	154.05	102.26	102.26	102.26	102.26
ROUGHNESS	(mm)	0.046	0.046	0.046	0.046	0.046	0.046
VELOCITY	(m/s)	**0.164**	**0.164**	**0.372**	**0.386**	**0.404**	**0.386**
REYNOLDS NO.	(-)	4038	4038	6083	6312	6312	6312
FRICTION FACTOR	(-)	0.010	0.010	0.009	0.009	0.009	0.009
ΔP / 100m	(kg/cm^2)	**0.004**	**0.004**	**0.026**	**0.028**	**0.029**	**0.028**
STRAIGHT LENGTH	(m)	111	50	12	102	412	168
NO. OF PIPE ENTRANCE							
NO. OF PIPE EXIT							
NO. OF 90 ELBOW							
NO. OF TEE							
NO. OF GLOBE VALVE							
NO. OF GATE VALVE		2	1	1	3	2	
NO. OF CHECK VALVE				1			
NO. OF BUTTER VALVE							
NO. OF BALL VALVE							
NO. OF CONTRACT							
NO. OF ENLARGER							
OTHER Ks							
PIPE ΔP	(kg/cm^2)	0.0042	0.0019	0.0032	0.0286	0.1209	0.0471
FITTING ΔP	(kg/cm^2)	0.0000	0.0000	0.0007	0.0003	0.0002	0.0000
TOTAL ΔP	(kg/cm^2)	**0.0042**	**0.0019**	**0.0039**	**0.0289**	**0.1211**	**0.0471**

NOTES

1. Differential shut off pressure at max impeller size shall be lower than pump differential pressure X 1.25.
   Max suction pressure = Max suction static head + Suction equipment design pressure

PUMP HYDRAULIC CALCULATION SHEET

LOTTE E&C

REV	DATE	BY	CHK'D	APP'D
2	07-Mar-2024	J.H.JUNG	S.K.PARK	C.M.BAE
1	06-Feb-2023	J.H.JUNG	S.K.PARK	C.M.BAE
0	30-Jun-2022	J.H.JUNG	S.K.PARK	C.M.BAE
3	14-Jun-2024	J.H.JUNG	S.K.PARK	C.M.BAE

REVISION

1	PROJECT :	LINE PROJECT	JOB NO. :	15005
2	CLIENT :	PT LOTTE CHEMICAL INDONESIA	DOCU. NO. :	LINE-900-BC-4-0001
3	LOCATION :	CILEGON, INDONESIA	ITEM NO. :	**90-P-429A/B**
4	UNIT :	WP5	NO. REQUIRED :	2 (TWO)
5	SERVICE :	**PFO TRANSFER PUMPS**	SHEET :	3 OF 4

	FLUID			
7	LIQUID PUMPED		PFO	
8	OPERATING TEMPERATURE	(℃)	90.0	
9	VISCOSITY @ OP. TEMP.	(cP)	6.63	
10	VAPOR PRESS. @ OP. TEMP.	(kg/cm2A)	0.2	
11	SP. GR. @ OP. TEMP.	(-)	1.060	
12				
13	NORMAL CAPACITY (50 t/h)	(m3/hr)	47	
14	EXCESS RATIO	(%)	10	
15	RATED CAPACITY	(m3/hr)	52	
16	**SUCTION**			
17	PRESS. @ EQUIPMENT	(kg/cm2A) (kg/cm2G)	1.03	0.00
18	MIN. STATIC HEAD	(m)	-0.30	
19	PIPE FRICTION	(kg/cm2)	0.092	
20	STRAINER	(kg/cm2)	0.07	
21				
22				
23				
24	NET SUC. PRESS.	(kg/cm2A) (kg/cm2G)	0.839	-0.2
25	NPSH a @ Suction Nozzle Center	(m)	6.0	
26	**DISCHARGE**			
27	PRESS. @ EQUIP. or BL	(kg/cm2A) (kg/cm2G)	1.53	0.50
28	STATIC HEAD	(m)	4.7	
29	PIPE FRICTION	(kg/cm2)	1.112	
30	FE-4028	(kg/cm2)	0.20	
31	FE-4031	(kg/cm2)	0.20	
32	STB-4001A/B	(kg/cm2)	0.07	
33	LOADING ARM ΔP	(kg/cm2)	1.00	
34		(kg/cm2)		
35		(kg/cm2)		
36		(kg/cm2)		
37				
38	TOTAL DISCH. PRESS.	(kg/cm2A) (kg/cm2G)	4.6	3.6
39	SUC. PRESS.	(kg/cm2A) (kg/cm2G)	0.8	-0.2
40	DIFF. PRESS. (ΔP)	(kg/cm2)	3.8	
41	TOTAL HEAD (NET)	(m)	36	
42	TOTAL HEAD (TAKE)	(m)		
43	DIFF. PRESS. (ΔP) (TAKE)	(kg/cm2)		
44	TOTAL DISCH. PRESS. (TAKE)	(kg/cm2G)		
45				
46				
47				
48	**MAX SHUT OFF PRESSURE (NOTE 1)**			
49	MAX. SUC. STATIC HEAD	(m)		
50	SUC. EQUIP. DESIGN PRESS.	(kg/cm2G)		
51	MAX. SUC. PRESS.	(kg/cm2G)		
52	DIFF. PRESS. (ΔP) (TAKE)	(kg/cm2)		
53	SHUTOFF COEFF.	(%)		
54	MAX. SHUTOFF PRESS.	(kg/cm2G)		

SKETCH

CASE 3 : TRUCK LOADING

1 OPERATION + 1 STANDBY, TYPE : HORIZONTAL CENTRIFUGAL

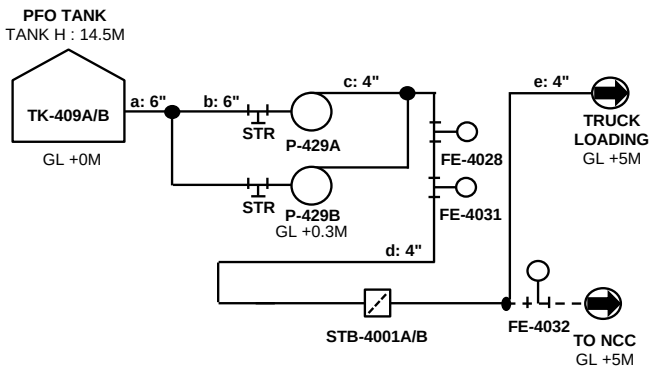

PIPE PRESSURE DROP

PIPING MATERIAL (C.S. or SUS.) : C.S. (1C1P)

		Suction		Discharge		
SECTION		**a**	**b**	**c**	**d**	**e**
FLOW RATE	(m^3/h)	52	52	52	52	52
PIPE ID	(in)	6	6	4	4	4
PIPE SCH.	(in)	40	40	40	40	40
PIPE ID	(mm)	154.05	154.05	102.26	102.26	102.26
ROUGHNESS	(mm)	0.046	0.046	0.046	0.046	0.046
VELOCITY	(m/s)	**0.774**	**0.774**	**1.759**	**1.759**	**1.842**
REYNOLDS NO.	(-)	19058	19058	28754	28754	28754
FRICTION FACTOR	(-)	0.007	0.007	0.006	0.006	0.006
ΔP / 100m	(kg/cm^2)	**0.056**	**0.056**	**0.407**	**0.407**	**0.426**
STRAIGHT LENGTH	(m)	111	50	12	102	143
NO. OF PIPE ENTRANCE						
NO. OF PIPE EXIT						
NO. OF 90 ELBOW						
NO. OF TEE						
NO. OF GLOBE VALVE						
NO. OF GATE VALVE		2	1	1	3	7
NO. OF CHECK VALVE				1		
NO. OF BUTTER VALVE						
NO. OF BALL VALVE						
NO. OF CONTRACT						
NO. OF ENLARGER						
OTHER Ks						
PIPE ΔP	(kg/cm^2)	0.0626	0.0282	0.0488	0.4149	0.6085
FITTING ΔP	(kg/cm^2)	0.0008	0.0004	0.0158	0.0069	0.0168
TOTAL ΔP	(kg/cm^2)	**0.0634**	**0.0286**	**0.0646**	**0.4218**	**0.6253**

NOTES

1. Differential shut off pressure at max impeller size shall be lower than pump differential pressure X 1.25.
   Max suction pressure = Max suction static head + Suction equipment design pressure

PUMP HYDRAULIC CALCULATION SHEET

LOTTE E&C

REV	DATE	BY	CHK'D	APP'D
2	07-Mar-2024	J.H.JUNG	S.K.PARK	C.M.BAE
1	06-Feb-2023	J.H.JUNG	S.K.PARK	C.M.BAE
0	30-Jun-2022	J.H.JUNG	S.K.PARK	C.M.BAE
3	14-Jun-2024	J.H.JUNG	S.K.PARK	C.M.BAE

REVISION

1	PROJECT :	LINE PROJECT	JOB NO. :	15005
2	CLIENT :	PT LOTTE CHEMICAL INDONESIA	DOCU. NO. :	LINE-900-BC-4-0001
3	LOCATION :	CILEGON, INDONESIA	ITEM NO. :	**90-P-429A/B**
4	UNIT :	WP5	NO. REQUIRED :	2 (TWO)
5	SERVICE :	**PFO TRANSFER PUMPS**	SHEET :	4 OF 4

	FLUID		
7	LIQUID PUMPED		PFO
8	OPERATING TEMPERATURE	(℃)	90.0
9	VISCOSITY @ OP. TEMP.	(cP)	6.63
10	VAPOR PRESS. @ OP. TEMP.	(kg/cm2A)	0.2
11	SP. GR. @ OP. TEMP.	(-)	1.060
12			
13	NORMAL CAPACITY (50 t/h)	(m3/hr)	47
14	EXCESS RATIO	(%)	10
15	RATED CAPACITY	(m3/hr)	52
16	**SUCTION**		
17	PRESS. @ EQUIPMENT	(kg/cm2A) (kg/cm2G)	
18	MIN. STATIC HEAD	(m)	
19	PIPE FRICTION	(kg/cm2)	
20		(kg/cm2)	
21		(kg/cm2)	
22		(kg/cm2)	
23			
24	NET SUC. PRESS.	(kg/cm2A) (kg/cm2G)	
25	NPSH a @ Suction Nozzle Center	(m)	
26	**DISCHARGE**		
27	PRESS. @ EQUIP. or BL	(kg/cm2A) (kg/cm2G)	
28	STATIC HEAD	(m)	
29	PIPE FRICTION	(kg/cm2)	
30		(kg/cm2)	
31		(kg/cm2)	
32		(kg/cm2)	
33		(kg/cm2)	
34		(kg/cm2)	
35		(kg/cm2)	
36		(kg/cm2)	
37			
38	TOTAL DISCH. PRESS.	(kg/cm2A) (kg/cm2G)	
39	SUC. PRESS.	(kg/cm2A) (kg/cm2G)	
40	DIFF. PRESS. (ΔP)	(kg/cm2)	
41	TOTAL HEAD (NET)	(m)	
42	TOTAL HEAD (TAKE)	(m)	
43	DIFF. PRESS. (ΔP) (TAKE)	(kg/cm2)	
44	TOTAL DISCH. PRESS. (TAKE)	(kg/cm2G)	
45			
46			
47			
48	**MAX SHUT OFF PRESSURE (NOTE 1)**		
49	MAX. SUC. STATIC HEAD	(m)	
50	SUC. EQUIP. DESIGN PRESS.	(kg/cm2G)	
51	MAX. SUC. PRESS.	(kg/cm2G)	
52	DIFF. PRESS. (ΔP) (TAKE)	(kg/cm2)	
53	SHUTOFF COEFF.	(%)	
54	MAX. SHUTOFF PRESS.	(kg/cm2G)	

SKETCH

PUMP MINIMUM FLOW LINE

2 OPERATION + 0 STANDBY, TYPE : HORIZONTAL CENTRIFUGAL

MINIMUM FLOWRATE IS VENDOR DATA.

PUMP MINIMUM FLOWRATE =	40	m3/hr		
PUMP DISCH. P. AS PER CURVE =	7.9	kg/cm2g	(1)	
SUCTION EQUIPMENT PRESS. =	0.00	kg/cm2g	(2)	
SUCTION EQUIPMENT HEAD =	14.5	m		
	1.54	kg/cm2	(3)	
PIPE FRICTION =	0.51	kg/cm2	(4)	
FE-4028 DEL P =	0.20	kg/cm2	(5)	2
OTHERS DEL P =		kg/cm2	(6)	
OTHERS DEL P =		kg/cm2	(7)	
FV-4028 DEL P =	**5.7**	**kg/cm2**	(8)	2

(8) = (1) - (2) - (3) - (4) - (5) - (6) - (7)

PIPE PRESSURE DROP

PIPING MATERIAL (C.S. or SUS.) : C.S. (1C1P)

		Suction		Discharge			
SECTION				**a**			
FLOW RATE	(m^3/h)			40			
PIPE ID	(in)			4			
PIPE SCH.	(in)			40			
PIPE ID	(mm)			102.26			
ROUGHNESS	(mm)			0.046			
VELOCITY	(m/s)			**1.353**			
REYNOLDS NO.	(-)			22118			
FRICTION FACTOR	(-)			0.007			
ΔP / 100m	(kg/cm^2)			**0.254**			
STRAIGHT LENGTH	(m)			200			
NO. OF PIPE ENTRANCE							
NO. OF PIPE EXIT							
NO. OF 90 ELBOW							
NO. OF TEE							
NO. OF GLOBE VALVE							
NO. OF GATE VALVE							
NO. OF CHECK VALVE							
NO. OF BUTTER VALVE							
NO. OF BALL VALVE							
NO. OF CONTRACT							
NO. OF ENLARGER							
OTHER Ks							
PIPE ΔP	(kg/cm^2)			0.5085			
FITTING ΔP	(kg/cm^2)			0.0000			
TOTAL ΔP	(kg/cm^2)			**0.5085**			

NOTES

1. Differential shut off pressure at max impeller size shall be lower than pump differential pressure X 1.25.
   Max suction pressure = Max suction static head + Suction equipment design pressure

PUMP HYDRAULIC CALCULATION SHEET

LOTTE E&C

REV	DATE	BY	CHK'D	APP'D
2	07-Mar-2024	J.H.JUNG	S.K.PARK	C.M.BAE
1	06-Feb-2023	J.H.JUNG	S.K.PARK	C.M.BAE
0	30-Jun-2022	J.H.JUNG	S.K.PARK	C.M.BAE
3	14-Jun-2024	J.H.JUNG	S.K.PARK	C.M.BAE

REVISION

1	PROJECT :	LINE PROJECT	JOB NO. :	15005
2	CLIENT :	PT LOTTE CHEMICAL INDONESIA	DOCU. NO. :	LINE-900-BC-4-0001
3	LOCATION :	CILEGON, INDONESIA	ITEM NO. :	**90-P-441**
4	UNIT :	WP5	NO. REQUIRED :	1 (ONE)
5	SERVICE :	**RPG DRAIN PUMP**	SHEET :	1 OF 1

6	**FLUID**			
7	LIQUID PUMPED	**(NOTE 4)**	RPG	
8	OPERATING TEMPERATURE	(℃)	22.7	AMB
9	VISCOSITY @ OP. TEMP.	(cP)	0.482	
10	VAPOR PRESS. @ OP. TEMP.	(kg/cm2A)	0.318	
11	SP. GR. @ OP. TEMP.	(-)	0.810	
12				
13	NORMAL CAPACITY	(m3/hr)	-	
14	EXCESS RATIO	(%)	-	
15	RATED CAPACITY	(m3/hr)	10	
16	**SUCTION**			
17	PRESS. @ EQUIPMENT	(kg/cm2A) (kg/cm2G)	1.04	0.01
18	MIN. STATIC HEAD	(m)	0.5	**(NOTE 5)**
19	PIPE FRICTION	(kg/cm2)	0.000	
20	STRAINER	(kg/cm2)	0.04	assumed
21		(kg/cm2)		
22		(kg/cm2)		
23				
24	NET SUC. PRESS.	(kg/cm2A) (kg/cm2G)	1.044	0.01
25	NPSH a @ Suction Nozzle Center	(m)	9.0	
26	**DISCHARGE**			
27	PRESS. @ EQUIP. or BL	(kg/cm2A) (kg/cm2G)	1.03	0.00
28	STATIC HEAD	(m)	14.5	
29	PIPE FRICTION	(kg/cm2)	0.819	
30		(kg/cm2)		
31		(kg/cm2)		
32		(kg/cm2)		
33		(kg/cm2)		
34		(kg/cm2)		
35		(kg/cm2)		
36		(kg/cm2)		
37				
38	TOTAL DISCH. PRESS.	(kg/cm2A) (kg/cm2G)	3.0	2.0
39	SUC. PRESS.	(kg/cm2A) (kg/cm2G)	1.0	0.0
40	DIFF. PRESS. (ΔP)	(kg/cm2)	2.0	
41	TOTAL HEAD (NET)	(m)	24	
42	TOTAL HEAD (TAKE)	(m)	45	**(NOTE 2)**
43	DIFF. PRESS. (ΔP) (TAKE)	(kg/cm2)	3.7	
44	TOTAL DISCH. PRESS. (TAKE)	(kg/cm2G)	3.7	**(NOTE 3)**
45				
46				
47				
48	**MAX SHUT OFF PRESSURE (NOTE 1)**			
49	MAX. SUC. STATIC HEAD	(m)	2.5	
50	SUC. EQUIP. DESIGN PRESS.	(kg/cm2G)	3.50	
51	MAX. SUC. PRESS.	(kg/cm2G)	3.7	
52	DIFF. PRESS. (ΔP) (TAKE)	(kg/cm2)	3.7	
53	SHUTOFF COEFF.	(%)	125	
54	MAX. SHUTOFF PRESS. **(NOTE 2)**	(kg/cm2G)	8.3	10.0

SKETCH

CASE : DRAIN TRANSFER TO RPG TANK

1 OPERATION + 1 COMMON WAREHOUSE SPARE, TYPE : VERTICAL SUMP

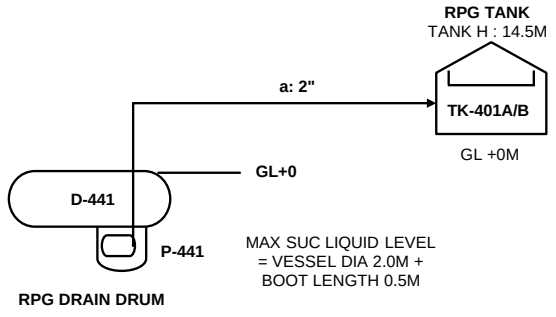

* P-141B IS WAREHOUSE SPARE

PIPE PRESSURE DROP

PIPING MATERIAL (C.S. or SUS.) : C.S. (1C1P)

		Suction		Discharge			
SECTION				a			
FLOW RATE	(m^3/h)			10			
PIPE ID	(in)			2			
PIPE SCH.	(in)			40			
PIPE ID	(mm)			52.50			
ROUGHNESS	(mm)			0.046			
VELOCITY	(m/s)			**1.283**			
REYNOLDS NO.	(-)			113210			
FRICTION FACTOR	(-)			0.005			
ΔP / 100m	(kg/cm^2)			**0.278**			
STRAIGHT LENGTH	(m)			294			
NO. OF PIPE ENTRANCE							
NO. OF PIPE EXIT							
NO. OF 90 ELBOW							
NO. OF TEE							
NO. OF GLOBE VALVE							
NO. OF GATE VALVE							
NO. OF CHECK VALVE							
NO. OF BUTTER VALVE							
NO. OF BALL VALVE							
NO. OF CONTRACT							
NO. OF ENLARGER							
OTHER Ks							
PIPE ΔP	(kg/cm^2)			0.8194			
FIITTING ΔP	(kg/cm^2)			0.0000			
TOTAL ΔP	(kg/cm^2)			**0.8194**			

NOTES

1. Differential shut off pressure at max impeller size shall be lower than pump differential pressure X 1.25.
   Max suction pressure = Max suction static head + Suction equipment design pressure
2. Pump head and pump shut off pressure is maximum value among drain pumps, because naphtha drain pump B is used for common spare.
3. Discharge pressure at the outlet nozzle (grade)
4. Pump for C5, GC5C6, NON-ARO RAFFINATE, BENZENE, TOLUENE, XYLENE, and RPG drains.
5. LLL is considered for NPSHa.

: SELECTED DATA FOR PUMP DATASHEET

PUMP HYDRAULIC CALCULATION SHEET

LOTTE E&C

REV	DATE	BY	CHK'D	APP'D
2	07-Mar-2024	J.H.JUNG	S.K.PARK	C.M.BAE
1	06-Feb-2023	J.H.JUNG	S.K.PARK	C.M.BAE
0	30-Jun-2022	J.H.JUNG	S.K.PARK	C.M.BAE
3	14-Jun-2024	J.H.JUNG	S.K.PARK	C.M.BAE

REVISION

1	PROJECT :	LINE PROJECT	JOB NO. :	15005
2	CLIENT :	PT LOTTE CHEMICAL INDONESIA	DOCU. NO. :	LINE-900-BC-4-0001
3	LOCATION :	CILEGON, INDONESIA	ITEM NO. :	**90-P-442**
4	UNIT :	WP5	NO. REQUIRED :	1 (ONE)
5	SERVICE :	**C9+/PFO DRAIN DRUM**	SHEET :	1 OF 1

	FLUID			
7	LIQUID PUMPED	**(NOTE 4)**	PFO	
8	OPERATING TEMPERATURE	(℃)	90	
9	VISCOSITY @ OP. TEMP.	(cP)	6.63	
10	VAPOR PRESS. @ OP. TEMP.	(kg/cm2A)	0.2	
11	SP. GR. @ OP. TEMP.	(-)	1.060	
12				
13	NORMAL CAPACITY	(m3/hr)	-	
14	EXCESS RATIO	(%)	-	
15	RATED CAPACITY	(m3/hr)	10	
16	**SUCTION**			
17	PRESS. @ EQUIPMENT	(kg/cm2A) (kg/cm2G)	1.04	0.01
18	MIN. STATIC HEAD	(m)	0.5	**(NOTE 5)**
19	PIPE FRICTION	(kg/cm2)	0.000	
20	STRAINER	(kg/cm2)	0.05	assumed
21		(kg/cm2)		
22		(kg/cm2)		
23				
24	NET SUC. PRESS.	(kg/cm2A) (kg/cm2G)	1.046	0.01
25	NPSH a @ Suction Nozzle Center	(m)	8.0	
26	**DISCHARGE**			
27	PRESS. @ EQUIP. or BL	(kg/cm2A) (kg/cm2G)	1.03	0.00
28	STATIC HEAD	(m)	14.5	
29	PIPE FRICTION	(kg/cm2)	1.092	
30		(kg/cm2)		
31		(kg/cm2)		
32		(kg/cm2)		
33		(kg/cm2)		
34		(kg/cm2)		
35		(kg/cm2)		
36		(kg/cm2)		
37				
38	TOTAL DISCH. PRESS.	(kg/cm2A) (kg/cm2G)	3.7	2.6
39	SUC. PRESS.	(kg/cm2A) (kg/cm2G)	1.0	0.0
40	DIFF. PRESS. (ΔP)	(kg/cm2)	2.6	
41	TOTAL HEAD (NET)	(m)	25	
42	TOTAL HEAD (TAKE)	(m)	45	**(NOTE 2)**
43	DIFF. PRESS. (ΔP) (TAKE)	(kg/cm2)	4.8	
44	TOTAL DISCH. PRESS. (TAKE)	(kg/cm2G)	4.8	**(NOTE 3)**
45				
46				
47				
48	**MAX SHUT OFF PRESSURE (NOTE 1)**			
49	MAX. SUC. STATIC HEAD	(m)	2.5	
50	SUC. EQUIP. DESIGN PRESS.	(kg/cm2G)	3.50	
51	MAX. SUC. PRESS.	(kg/cm2G)	3.8	
52	DIFF. PRESS. (ΔP) (TAKE)	(kg/cm2)	4.8	
53	SHUTOFF COEFF.	(%)	125	
54	MAX. SHUTOFF PRESS. **(NOTE 2)**	(kg/cm2G)	10.0	

SKETCH

CASE : DRAIN TRANSFER TO PFO TANK

1 OPERATION + 1 COMMON WAREHOUSE SPARE, TYPE : VERTICAL SUMP

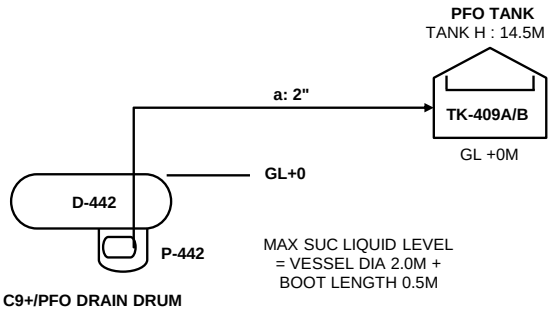

* P-141B IS WAREHOUSE SPARE

PIPE PRESSURE DROP

PIPING MATERIAL (C.S. or SUS.) : C.S. (1C1P)

		Suction		Discharge			
SECTION				a			
FLOW RATE	(m^3/h)			10			
PIPE ID	(in)			2			
PIPE SCH.	(in)			40			
PIPE ID	(mm)			52.50			
ROUGHNESS	(mm)			0.046			
VELOCITY	(m/s)			**1.283**			
REYNOLDS NO.	(-)			10771			
FRICTION FACTOR	(-)			0.008			
ΔP / 100m	(kg/cm^2)			**0.537**			
STRAIGHT LENGTH	(m)			203			
NO. OF PIPE ENTRANCE							
NO. OF PIPE EXIT							
NO. OF 90 ELBOW							
NO. OF TEE							
NO. OF GLOBE VALVE							
NO. OF GATE VALVE							
NO. OF CHECK VALVE							
NO. OF BUTTER VALVE							
NO. OF BALL VALVE							
NO. OF CONTRACT							
NO. OF ENLARGER							
OTHER Ks							
PIPE ΔP	(kg/cm^2)			1.0923			
FITTING ΔP	(kg/cm^2)			0.0000			
TOTAL ΔP	(kg/cm^2)			**1.0923**			

NOTES

1. Differential shut off pressure at max impeller size shall be lower than pump differential pressure X 1.25.
   Max suction pressure = Max suction static head + Suction equipment design pressure
2. Pump head and pump shut off pressure is maximum value among drain pumps, because naphtha drain pump B is used for common spare.
3. Discharge pressure at the outlet nozzle (grade)
4. Pump for C9 and PFO drains.
5. LLL is considered for NPSHa.

: SELECTED DATA FOR PUMP DATASHEET

PUMP HYDRAULIC CALCULATION SHEET

LOTTE E&C

REV	DATE	BY	CHK'D	APP'D
2	07-Mar-2024	J.H.JUNG	S.K.PARK	C.M.BAE
1	06-Feb-2023	J.H.JUNG	S.K.PARK	C.M.BAE
0	30-Jun-2022	J.H.JUNG	S.K.PARK	C.M.BAE
3	14-Jun-2024	J.H.JUNG	S.K.PARK	C.M.BAE

REVISION

1	PROJECT :	LINE PROJECT	JOB NO. :	15005
2	CLIENT :	PT LOTTE CHEMICAL INDONESIA	DOCU. NO. :	LINE-900-BC-4-0001
3	LOCATION :	CILEGON, INDONESIA	ITEM NO. :	**90-P-450A/B**
4	UNIT :	WP5	NO. REQUIRED :	2 (TWO)
5	SERVICE :	**OWS PUMPS FOR ATM TANK AREA**	SHEET :	1 OF 1

	FLUID			
7	LIQUID PUMPED		OILY WATER	
8	OPERATING TEMPERATURE	(℃)	22.7	AMB
9	VISCOSITY @ OP. TEMP.	(cP)	0.89	
10	VAPOR PRESS. @ OP. TEMP.	(kg/cm2A)	0.032	
11	SP. GR. @ OP. TEMP.	(-)	0.997	
12				
13	NORMAL CAPACITY (300 t/h)	(m3/hr)	-	
14	EXCESS RATIO	(%)	-	
15	RATED CAPACITY	(m3/hr)	40	
16	**SUCTION**			
17	PRESS. @ EQUIPMENT	(kg/cm2A) (kg/cm2G)	1.03	0.00
18	MIN. STATIC HEAD	(m)	0.50	(NOTE 3)
19	PIPE FRICTION	(kg/cm2)	0.000	
20	STRAINER	(kg/cm2)	0.05	assumed
21		(kg/cm2)		
22		(kg/cm2)		
23				
24	NET SUC. PRESS.	(kg/cm2A) (kg/cm2G)	1.033	0.0
25	NPSH a @Suction Nozzle Center	(m)	10.0	
26				
27	PRESS. @ EQUIP. or BL	(kg/cm2A) (kg/cm2G)	1.03	0.00
28	STATIC HEAD	(m)	13.5	
29	PIPE FRICTION	(kg/cm2)	1.597	
30	FT-4150	(kg/cm2)	0.20	
31	MARGIN	(kg/cm2)	3.34	
32		(kg/cm2)		
33		(kg/cm2)		
34		(kg/cm2)		
35		(kg/cm2)		
36		(kg/cm2)		
37				
38	TOTAL DISCH. PRESS.	(kg/cm2A) (kg/cm2G)	7.5	6.5
39	SUC. PRESS.	(kg/cm2A) (kg/cm2G)	1.0	0.0
40	DIFF. PRESS. (ΔP)	(kg/cm2)	6.5	
41	TOTAL HEAD (NET)	(m)	65	
42	TOTAL HEAD (TAKE)	(m)	65	
43	DIFF. PRESS. (ΔP) (TAKE)	(kg/cm2)	6.5	
44	TOTAL DISCH. PRESS. (TAKE)	(kg/cm2G)	6.5	(NOTE 2)
45				
46				
47				
48	**MAX SHUT OFF PRESSURE (NOTE 1)**			
49	MAX. SUC. STATIC HEAD	(m)	3.5	
50	SUC. EQUIP. DESIGN PRESS.	(kg/cm2G)	3.5	
51	MAX. SUC. PRESS.	(kg/cm2G)	3.8	
52	DIFF. PRESS. (ΔP) (TAKE)	(kg/cm2)	6.5	
53	SHUTOFF COEFF.	(%)	125	
54	MAX. SHUTOFF PRESS.	(kg/cm2G)	12.0	

SKETCH

CASE : OWS TRANSFER TO OWS TANK

1 OPERATION + 1 COMMON WAREHOUSE SPARE, TYPE : VERTICAL SUMP (VS4)

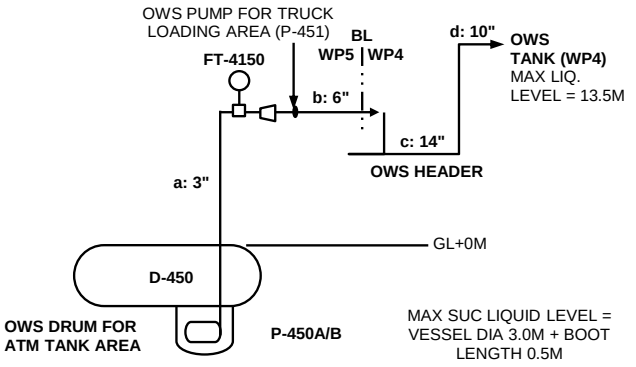

* P-450B IS WAREHOUSE SPARE

PIPE PRESSURE DROP

PIPING MATERIAL (C.S. or SUS.) : C.S. (1C1W)

		Suction		Discharge			
SECTION				**a**	**b**	**c**	**d**
FLOW RATE	(m^3/h)			40	80	600	600
PIPE ID	(in)			**3**	**6**	**14**	**10**
PIPE SCH.	(in)			40	40	STD	40
PIPE ID	(mm)			77.93	154.05	336.55	254.51
ROUGHNESS	(mm)			0.046	0.046	0.046	0.046
VELOCITY	(m/s)			**2.329**	**1.192**	**1.874**	**3.276**
REYNOLDS NO.	(-)			203361	205750	706339	934024
FRICTION FACTOR	(-)			0.005	0.004	0.004	0.004
ΔP / 100m	(kg/cm^2)			**0.681**	**0.083**	**0.076**	**0.311**
STRAIGHT LENGTH	(m)			50	294	1128	50
NO. OF PIPE ENTRANCE							
NO. OF PIPE EXIT							
NO. OF 90 ELBOW							
NO. OF TEE							
NO. OF GLOBE VALVE							
NO. OF GATE VALVE							
NO. OF CHECK VALVE							
NO. OF BUTTER VALVE							
NO. OF BALL VALVE							
NO. OF CONTRACT							
NO. OF ENLARGER							
OTHER Ks							
PIPE ΔP	(kg/cm^2)			0.3405	0.2435	0.8572	0.1557
FITTING ΔP	(kg/cm^2)			0.0000	0.0000	0.0000	0.0000
TOTAL ΔP	(kg/cm^2)			**0.3405**	**0.2435**	**0.8572**	**0.1557**

NOTES

1. Differential shut off pressure at max impeller size shall be lower than pump differential pressure X 1.25.
   Max suction pressure = Max suction static head + Suction equipment design pressure
2. Discharge pressure at the outlet nozzle (grade)
3. LLL is considered for NPSHa.

: SELECTED DATA FOR PUMP DATASHEET

PUMP HYDRAULIC CALCULATION SHEET

LOTTE E&C

REV	DATE	BY	CHK'D	APP'D
2	07-Mar-2024	J.H.JUNG	S.K.PARK	C.M.BAE
1	06-Feb-2023	J.H.JUNG	S.K.PARK	C.M.BAE
0	30-Jun-2022	J.H.JUNG	S.K.PARK	C.M.BAE
3	14-Jun-2024	J.H.JUNG	S.K.PARK	C.M.BAE

REVISION

1	PROJECT :	LINE PROJECT	JOB NO. :	15005
2	CLIENT :	PT LOTTE CHEMICAL INDONESIA	DOCU. NO. :	LINE-900-BC-4-0001
3	LOCATION :	CILEGON, INDONESIA	ITEM NO. :	**90-P-451**
4	UNIT :	WP5	NO. REQUIRED :	1 (ONE)
5	SERVICE :	**OWS PUMP FOR TRUCK LOADING AREA**	SHEET :	1 OF 1

6	**FLUID**			
7	LIQUID PUMPED		OILY WATER	
8	OPERATING TEMPERATURE	(℃)	22.7	AMB
9	VISCOSITY @ OP. TEMP.	(cP)	0.89	
10	VAPOR PRESS. @ OP. TEMP.	(kg/cm2A)	0.032	
11	SP. GR. @ OP. TEMP.	(-)	0.997	
12				
13	NORMAL CAPACITY (300 t/h)	(m3/hr)	-	
14	EXCESS RATIO	(%)	-	
15	RATED CAPACITY	(m3/hr)	40	
16	**SUCTION**			
17	PRESS. @ EQUIPMENT	(kg/cm2A) (kg/cm2G)	1.03	0.00
18	MIN. STATIC HEAD	(m)	0.50	(NOTE 3)
19	PIPE FRICTION	(kg/cm2)	0.000	
20	STRAINER	(kg/cm2)	0.05	assumed
21		(kg/cm2)		
22		(kg/cm2)		
23				
24	NET SUC. PRESS.	(kg/cm2A) (kg/cm2G)	1.033	0.0
25	NPSH a @Suction Nozzle Center	(m)	10.0	
26	**DISCHARGE**			
27	PRESS. @ EQUIP. or BL	(kg/cm2A) (kg/cm2G)	1.03	0.00
28	STATIC HEAD	(m)	13.5	
29	PIPE FRICTION	(kg/cm2)	2.686	
30	FT-4151	(kg/cm2)	0.20	
31	MARGIN	(kg/cm2)	2.25	
32		(kg/cm2)		
33		(kg/cm2)		
34		(kg/cm2)		
35		(kg/cm2)		
36		(kg/cm2)		
37				
38	TOTAL DISCH. PRESS.	(kg/cm2A) (kg/cm2G)	7.5	6.5
39	SUC. PRESS.	(kg/cm2A) (kg/cm2G)	1.0	0.0
40	DIFF. PRESS. (ΔP)	(kg/cm2)	6.5	
41	TOTAL HEAD (NET)	(m)	65	
42	TOTAL HEAD (TAKE)	(m)	65	
43	DIFF. PRESS. (ΔP) (TAKE)	(kg/cm2)	6.5	
44	TOTAL DISCH. PRESS. (TAKE)	(kg/cm2G)	6.5	(NOTE 2)
45				
46				
47				
48	**MAX SHUT OFF PRESSURE (NOTE 1)**			
49	MAX. SUC. STATIC HEAD	(m)	3.5	
50	SUC. EQUIP. DESIGN PRESS.	(kg/cm2G)	3.5	
51	MAX. SUC. PRESS.	(kg/cm2G)	3.8	
52	DIFF. PRESS. (ΔP) (TAKE)	(kg/cm2)	6.5	
53	SHUTOFF COEFF.	(%)	125	
54	MAX. SHUTOFF PRESS.	(kg/cm2G)	12.0	

SKETCH

CASE : OWS TRANSFER TO OWS TANK

1 OPERATION + 1 COMMON WAREHOUSE SPARE, TYPE : VERTICAL SUMP (VS4)

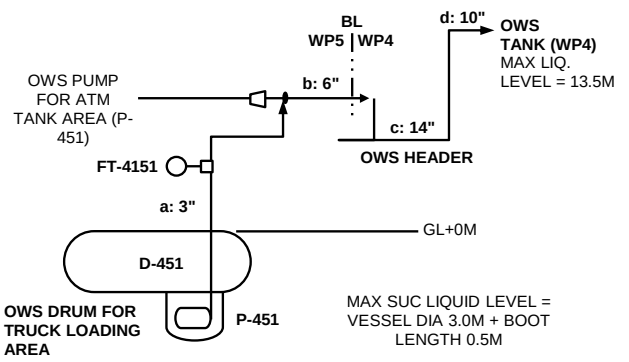

* P-450B IS WAREHOUSE SPARE

PIPE PRESSURE DROP

PIPING MATERIAL (C.S. or SUS.) : C.S. (1C1W)

		Suction		Discharge			
SECTION				**a**	**b**	**c**	**d**
FLOW RATE	(m^3/h)			40	80	600	600
PIPE ID	(in)			**3**	**6**	**14**	**10**
PIPE SCH.	(in)			40	40	STD	40
PIPE ID	(mm)			77.93	154.05	336.55	254.51
ROUGHNESS	(mm)			0.046	0.046	0.046	0.046
VELOCITY	(m/s)			**2.329**	**1.192**	**1.874**	**3.276**
REYNOLDS NO.	(-)			203361	205750	706339	934024
FRICTION FACTOR	(-)			0.005	0.004	0.004	0.004
ΔP / 100m	(kg/cm^2)			**0.681**	**0.083**	**0.076**	**0.311**
STRAIGHT LENGTH	(m)			210	294	1128	50
NO. OF PIPE ENTRANCE							
NO. OF PIPE EXIT							
NO. OF 90 ELBOW							
NO. OF TEE							
NO. OF GLOBE VALVE							
NO. OF GATE VALVE							
NO. OF CHECK VALVE							
NO. OF BUTTER VALVE							
NO. OF BALL VALVE							
NO. OF CONTRACT							
NO. OF ENLARGER							
OTHER Ks							
PIPE ΔP	(kg/cm^2)			1.4301	0.2435	0.8572	0.1557
FITTING ΔP	(kg/cm^2)			0.0000	0.0000	0.0000	0.0000
TOTAL ΔP	(kg/cm^2)			**1.4301**	**0.2435**	**0.8572**	**0.1557**

NOTES

1. Differential shut off pressure at max impeller size shall be lower than pump differential pressure X 1.25.
   Max suction pressure = Max suction static head + Suction equipment design pressure
2. Discharge pressure at the outlet nozzle (grade)
3. LLL is considered for NPSHa.

: SELECTED DATA FOR PUMP DATASHEET