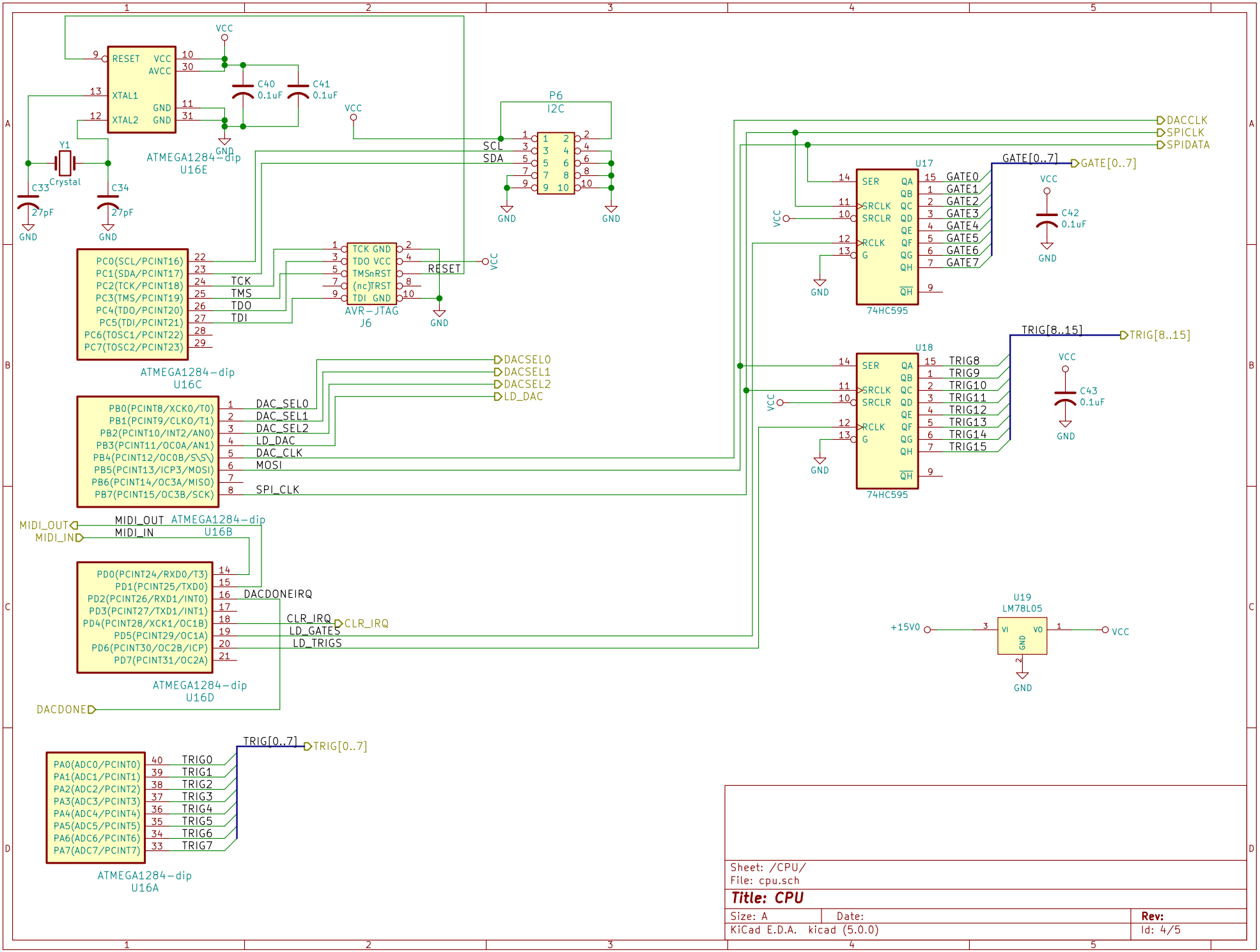

Sheet: /CPU/
File: cpu.sch

Title: CPU

Size: A	Date:	Rev:
KiCad E.D.A. kicad (5.0.0)		Id: 4/5