NOTE: ALL TRANSISTORS ARE THERMALLY CONNECTED.

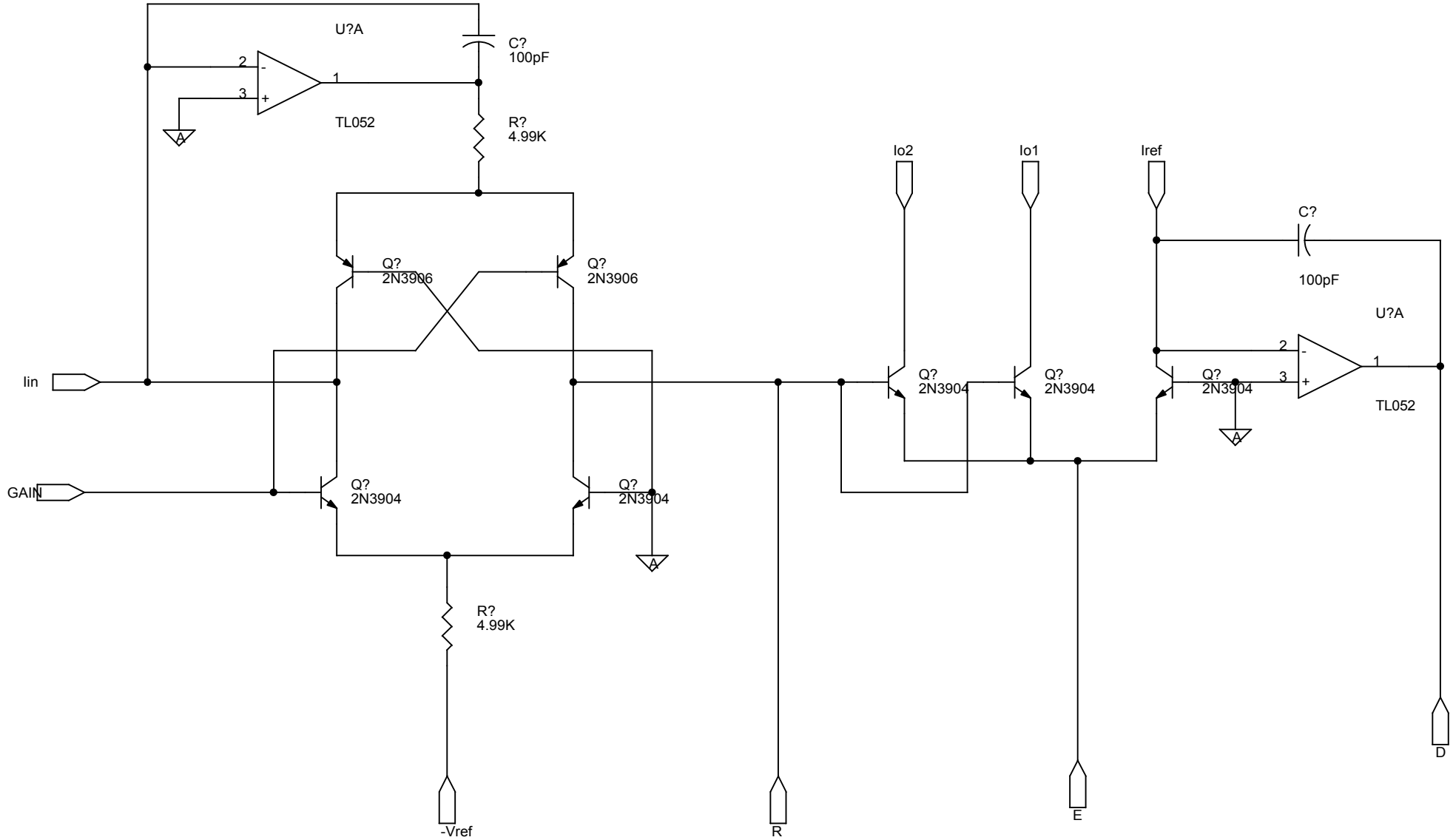

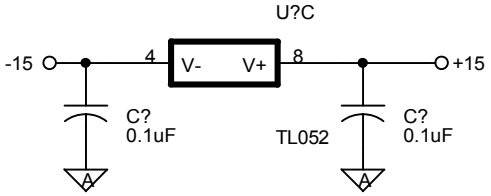

Title	**BM COMPENSATED EXPO CONV**	
Size A	Document Number <Doc>	Rev A
Date: Saturday, July 12, 2014	Sheet 1 of 1	