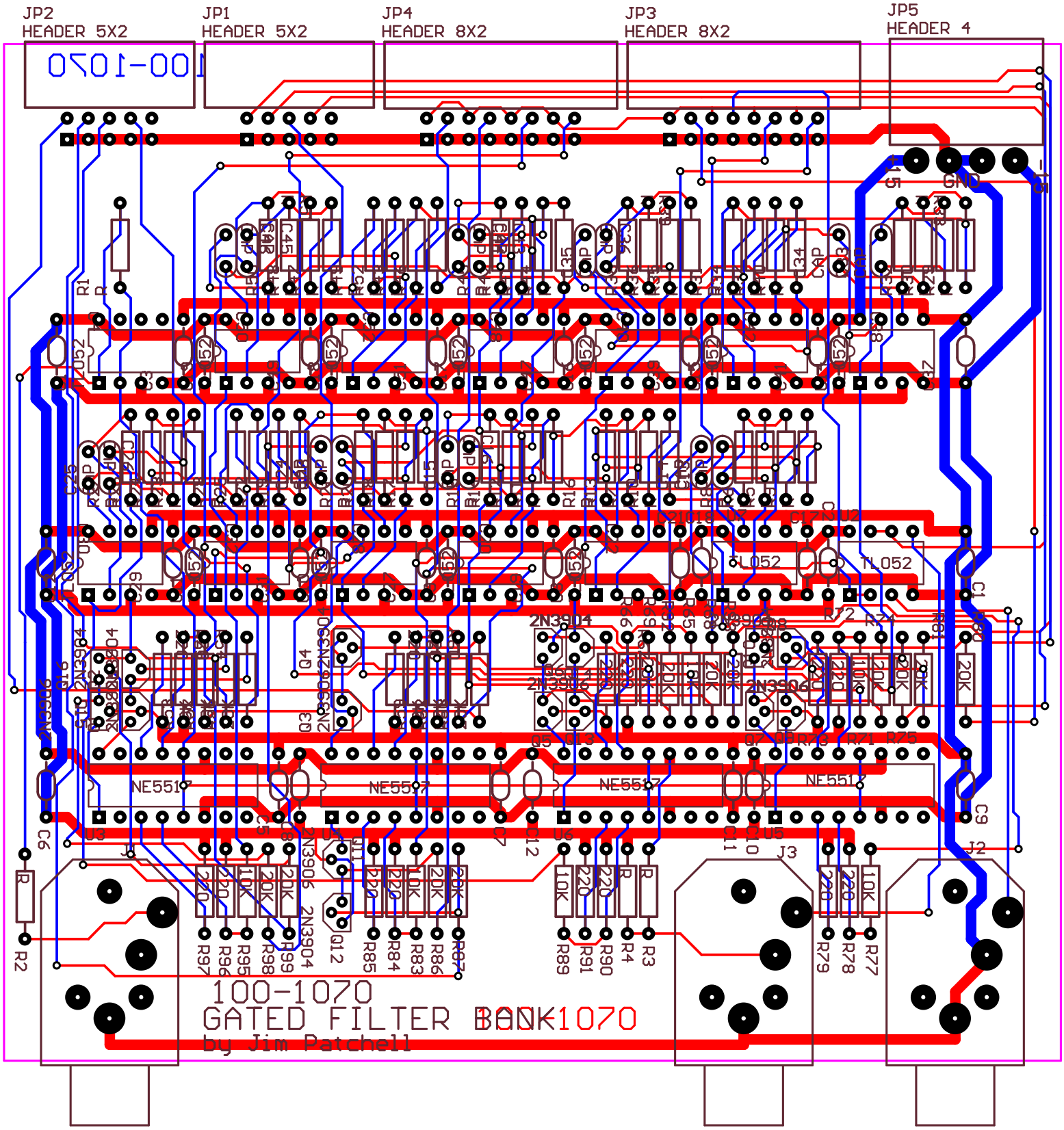
JP2
HEADER 5X2
JP1
HEADER 5X2
JP4
HEADER 8X2
JP3
HEADER 8X2
JP5
HEADER 4
100-1070
GATED FILTER BANK
by Jim Patchell
TL052
NE5517
2N3904
2N3906
GND