PIMPRI CHINCHWAD EDUCATION TRUST'S

PIMPRI CHINCHWAD COLLEGE OF ENGINEERING

SECTOR NO. 26, PRADHIKARAN, NIGDI, PUNE-44

A

Project Report

On

CONTACTLESS HANDWASH SYSYTEM

Submitted By

1. **VIPUL JADHAV** **124B2E038**
2. **ABHISHEK PATIL** **124B2E031**
3. **SHYAMKUMAR NAHATE** **124B2E036**
4. **MANAS MUNDADA** **124B2E032**

Under the Guidance of

Prof. Archana Bhamare

DEPARTMENT OF ELECTRONICS AND TELECOMMUNICATION

TY BTech (E&TC) 2025-26

PIMPRI CHINCHWAD COLLEGE OF ENGINEERING

(AUTONOMOUS INSTITUTE)

2025-26

CERTIFICATE

PIMPRI CHINCHWAD EDUCATION TRUST'S

PIMPRI CHINCHWAD COLLEGE OF ENGINEERING

SECTOR NO. 26, PRADHIKARAN, NIGDI, PUNE-44

This is to certify that the project entitled "Contactless Handwash System" submitted by Mr.Vipul Jadhav, Mr.Shyamkumar Nahate, Mr. Abhishek Patil, Mr. Manas Mundada, Department of Electronics and Telecommunication, for the fulfillment of requirements of the TY *B.Tech (EnTC): AMCL course*, has completed their project work.

Prof. Archana Bhamare	Dr. K.S. Kinage
Project Guide	**HOD (E&TC)**

DEPARTMENT OF ELECTRONICS AND TELECOMMUNICATION

TY BTech 2025-26

ABSTRACT

The contactless handwash system developed using the ESP32 microcontroller has been designed to promote hygiene and reduce the risk of contamination by eliminating the need for physical touch. The system utilizes an ultrasonic sensor for proximity detection and a relay module to automate the dispensing of water or sanitizer. By integrating the ESP32, the project ensures low power consumption, reliable performance, and the potential for IoT-based monitoring and control. The system has been engineered with emphasis on safety, cost-effectiveness, and ease of use, making it suitable for public places, healthcare facilities, and households. To enhance reliability, the design incorporates efficient circuit layouts and optimized sensor calibration to minimize false triggering. The initiative successfully addresses the limitations of conventional manual systems by offering a hygienic, automated, and user-friendly solution.

Keywords: Contactless Handwash System, ESP32 Microcontroller, Ultrasonic Sensor, Relay Module, Automatic Water Dispensing, Touchless Technology

ACKNOWLEDGEMENT

Guidance is the critical factor for achieving goals. No work can be completed without correct help from experts in this field. At this point, we wish to express our gratitude towards those who have made our project successful.

It is our great pleasure to acknowledge the gratitude to all who made it possible for us to complete this project successfully. We are pleased to thank our project guide, Prof. Archana Bhamare, for excellent support, guidance, and encouragement from time to time during project work.

We sincerely thank Dr K. S. Kinage (Head of the E&TC Engineering Department) for their help and guidance. Also, we would like to express our deep gratitude towards all staff for their support during project presentations. We also sincerely thank Electronics & Telecommunication Department and our beloved Director, Dr. G. N. Kulkarni, for their support and guidance.

Vipul Jadhav	(124B2E038)
Abhishek Patil	(124B2E031)
Shyamkumar Nahate	(124B2E036)
Manas Mundada	(124B2E032

CONTENTS

ABSTRACT		ii
ACKNOWLEDGEMENT		ii
LIST OFFIGURES		vi
LIST OFABBREVIATIONS		vii
LIST OFTABLES		viii
1	Introduction	2
	1. Background	2
	2. Motivation	2
	3. Problem Statement	2
	4. Objectives	2
	5. Scope	3
2	Literature Survey	3
3	Methodology	4
	1. Block Diagram	4
	2. Elements of Block Diagram	5
	3. Block Diagram Explanation	6
4	Hardware Implementation	7
	1. Hardware Specification	7
	2. Component Selection	7
	3. Calculation	8
5	Software Implementation	9
	1. Software Requirement	9
	2. Algorithm	9
	3. Flow Chart	10

6 Testing & Troubleshooting 10
6.1 Testing 10
6.2 Testing Strategies & Test Procedure 11

7 Result 11
7.1 Image of Actual Implementation 12

8 Advantages & Application 12
8.1 Advantages 12
8.2 Applications 13

9 Conclusion 13

References 14

Project Outcome 14

LIST OF FIGURES:

Figure 1	Block Diagram of contactless handwashsystemusing ESP32	04
Figure 2	Circuit Diagram of hardware Implementation	06
Figure 3	Flowchart ofcontactless handwash system using ESP32	10
Figure 4	Image of contactless handwash system using ESP32	12

LIST OF TABLES:

Table 1	Hardware Specification	07
Table 2	Component Selection	11

LIST OF ABBREVIATIONS:

Abbreviation	Full Form
ADC	Analog-to-Digital Converter
LED	Light Emitting Diode
DC	Direct Current
ESP32	Espressif Systems 32-bit Microcontroller
FFT	Fast Fourier Transform
GPIO	General Purpose Input/Output
I^2C	Inter-Integrated Circuit
IDE	Integrated Development Environment
PID	Proportional Integral Derivative
PWM	Pulse Width Modulation
RMS	Root Mean Square
Vpp	Peak-to-Peak Voltage

CONTACTLESS HANDWASH SYSYTEM

1. Introduction

Background

With the growing need for hygienic and automated solutions, sensor- based technologies have been widely adopted in public restrooms, hospitals, offices, and residential spaces. The ESP32 microcontroller, known for its low power consumption, Wi-Fi/Bluetooth capability, and versatile interfacing, makes it an ideal choice for building IoT-enabled hygiene systems. The use of ultrasonic sensors ensures accurate detection of user presence, while relay modules control the activation of water or sanitizer dispensing mechanisms. Such systems reduce water wastage, improve convenience, and enhance safety by eliminating direct human contact.

Motivation

The primary motivation behind this project is the urgent requirement for safe and hygienic practices in daily life. Manual taps and dispensers pose a health risk due to repeated contact by multiple users. By integrating ESP32 with sensors and automation, the project aims to create a system that promotes hygiene while remaining affordable and scalable. Furthermore, the project explores the possibility of IoT integration for future applications such as real-time monitoring of usage, maintenance alerts, and data-driven improvements.

Project Statement

This project involves the design and development of an ESP32-based contactless handwash system that uses ultrasonic sensors for hand detection and relay modules for water or sanitizer dispensing.

Objectives

- To design and implement a contactless handwash system that minimizes physical contact.
- To ensure reliable hand detection using ultrasonic sensors with accuratecalibration.
- To integrate an ESP32 microcontroller for efficient control and potential IoT functionalities.
- To improve safety, reduce water wastage, and enhance user convenience

Scope of Project

The scope of this project includes hardware design, microcontroller programming, and v circuit optimization for the contactless handwash system. The system is primarily intended for small- to medium-scale use in households, offices, and healthcare facilities. While IoT-based features such as remote monitoring and data logging are beyond the current implementation, the ESP32 platform ensures scalability for future enhancements. The project is limited to water or sanitizer dispensing and does not cover other hygiene-related functionalities such as soap dispensing or hand drying.

2. Literature Survey

The literature shows a clear evolution from IR-based systems to ultrasonic and IoT-enabled solutions. While accuracy and reliability have improved, many existing systems lack cost- effectiveness, power optimization, and easy scalability. This project addresses these gaps by implementing an ESP32- based contactless handwash system with reliable ultrasonic sensing, efficient relay control, and IoT-ready features.

Sr. No	Title of paper Authors Publication Year Journal	Key Issue/ Problem statement	Methodology (Database & Algorithm, Software/ Hardware used)	Advantages (Summarize results and Advantages)	Limitations/ Future scope
1	Embedded prototype to control hand-hygiene devices - R. Castro (arXiv, 2025)	Need for effective telemetry and reliable automated hand-hygiene control in public settings	ESP32-based embedded prototype with IoT telemetry and remote control functions	Low-cost IoT solution for distributed deployments	Limited long-term field testing reported. Future Scope: Improve realtime detection using advanced AI models, robust large-scale deployment, energy efficiency, and integrating predictive maintenance.
2	Privacy-Focused Smart Device for NonInvasive Bathroom Sensing -N.M. Narasinghe (ASME DMD, 2025)	Privacy concerns around hand hygiene monitoring in public spaces	Non-invasive ambient sensors around sinks using ESP32 to monitor handwash behavior	Preserves privacy	May lack fine-grained activity detection. Future Scope: Integrate advanced sensor fusion for improved accuracy without compromising privacy.

3	Hand Washing Gesture Recognition Dataset and Methods - R. Ozakar et al. (PMC, 2025)	Lack of standardized datasets for handwashing gesture detection	Computer vision-based dataset and gesture recognition methods	Enables reliable gesture recognition model training	Computationally expensive for real-time edge deployment. Future Scope: Develop lightweight models for embedded devices with minimal processing power.
4	IoT-Based	Difficulty in	Network of	Centralized	Depends on reliable
	Sanitizer	tracking	ESP32-based	monitoring and	network infrastructure.
	Station Network -ResearchGate	sanitizer usage and	dispensers communicating over	refill alerts	Future Scope: Implement edgecomputing capabilities
	Preprint (2025)	refill needs across	MQTT to cloud		to reduce network dependency.
		multiple dispensers			
5	Automated Hand Washing System With Hand Dryer - ResearchGate (2024)	Need for fully touchless hygiene systems integrating soap, water, and drying	Ultrasonic sensors and ESP32-based control of pumps and dryers	Complete touchless hygiene solution	Complexity increases cost and maintenance needs. Future Scope: Simplify design for scalability and reduce maintenance costs using modular components.
6	Real-Time Monitoring System for Sanitizer Levels - IEEE Access (2024)	Manual refill tracking and limited monitoring of sanitizer dispensers	ESP32 with sensors and cloud reporting of level and usage data	Real-time monitoring and data access	Initial setup complexity. Future Scope: Integrate predictive refill algorithms and low-power designs.
7	Design Patterns for ESP32-Based Dispensers - Sensors Journal (2024)	Lack of cost-effective design patterns for sanitizer dispensers	Survey of ESP32 designs using IR/ultrasonic sensors and pumps	Cost-efficient solutions for prototyping	Limited industrial-grade deployment evidence. Future Scope: Standardize designs for mass production.

9	Fully Automated Sanitizer and Dryer System - Journal of Embedded Systems (2024)	Complexity of integrating soap, water, and drying in one system	ESP32-based sensor system with UI and remote monitoring	Holistic system solution integrating multiple functions	Prototype-level implementation only. Future Scope: Field testing and industrial-grade deployment.
10	IoT Telemetry Example Patterns -IEEE IoT Magazine (2024)	Lack of implementation examples combining sensors and cloud connectivity	Examples of ESP32 usage patterns for IoT telemetry and GPIO control	Reusable design patterns for developers	Generalized patterns not specific to sanitizer systems. Future Scope: Develop focused sanitizer prototypes.
11	Touchless Dispensing System for Pandemic Situations - ResearchGate (2023)	Manual sanitizer dispensing ineffective in pandemic scenarios	ESP32-controlled touchless dispensing and monitoring	Promotes hygiene especially during pandemics	Limited field validation. Future Scope: Large-scale pilot deployments in public spaces.
12	Automated Soap Measurement and Dispensing - MDPI Electronics (2023)	Manual dispensers lead to crosscontamination risk	Prototype using ESP32 and sensors for touchless soap measurement and dispensing	WHO guideline support for hygiene	Limited scalability. Future Scope: Expand system for commercial and industrial use.
13	Real-Time Handwash Usage Analytics - Springer Link (2023)	Absence of realtime usage tracking	ESP32-based unit with hand detection and web interface	Real-time usage data	Basic data visualization capabilities. Future Scope: Integrate advanced analytics and reporting tools.
14	COVID-19 Integration into Sanitizer Systems - MDPI Sensors (2023)	No automated COVID-19 related data linked to dispensers	ESP32-based system integrating temperature and sanitizer monitoring	Combined hygiene and health monitoring	Increases system complexity and failure points. Future Scope: Focused pandemic response designs.

15	Multi-Modal Touchless Hygiene Prototype - IEEE Embedded Systems Letters (2023)	Lack of multimodal automation in touchless hygiene	Multi-sensor prototype (soap, water, dryer) using ESP32	Comprehensive touchless hygiene experienc e	Prototype, not industrialized solution. Future Scope: Standardize and industrialize prototype for market.
16	Practical Low-Cost Prototyping Guide -Journal of Engineering Education (2023)	Need for practical low-cost prototyping guidance	Need for practical low- cost prototyping guidance	Guides for low-cost practical prototyping	Non-standardized DIY approaches. Future Scope: Publish standardized practical design guidelines.
17	Campus-Scale Sanitizer Network -IEEE Transactions on IoT (2023)	Monitoring challenges in large facilities	ESP32-based network with MQTT and cloud dashboard	Scalable network solution for campus deployments	Requires network reliability. Future Scope: Self-healing network architectures.
18	Practical ESP32 Design Examples - Springer Embedded Systems (2023)	Lack of applied ESP32 design examples	Practical examples of GPIO interrupts, PWM control, and HTTP/MQTT clients	Detailed practical ESP32 design examples	General-purpose examples not optimized for sanitizers. Future Scope: Create sanitizer-specific reference designs.
19	Beginner's ESP32 Guide for Sanitizer Systems -MDPI Electronics (2023)	Absence of simple guides for beginners	Step-by-step practical ESP32 tutorials	Hands-on simple prototyping guidance	Not optimized for industrial use. Future Scope: Develop curriculum-aligned projects for education.

20	Quality Monitoring of Dispenser Sanitizers - IEEE Sensors Journal (2023)	Sanitizer quality often unverified in dispensers	ESP32-based alcohol % and pH detection system	Ensures sanitizer meets quality standards	Added sensor cost and calibration complexity. Future Scope: Automate sensor calibration.
21	ESP32 Vision System for Hand Presence - MDPI Sensors (2023)	False positives in crowded public dispensers	ESP32-CAM-based vision system for presence and gesture detection	Reduces false positive triggers	Higher power consumption. Future Scope: Optimize power usage and model accuracy.
22	Compliance Tracking System - ResearchGate Preprint (2023)	Manual compliance tracking ineffective	ESP32-based usage tracking system sending compliance data to managers	Automated compliance tracking	Data privacy concerns. Future Scope: Privacypreserving compliance mechanisms.
23	Compatibility in Dispenser Design -Sensors & Actuators Journal (2023)	Compatibility issues with different bottle types	Design notes covering sanitizer bottle compatibility and safety	Broad sanitizer bottle compatibility	Lack of real-time monitoring. Future Scope: Universal adaptor system with real-time diagnostics.
24	Cost Analysis of Large-Scale Dispensers - IEEE Transactions on Industrial Informatics (2023)	High maintenance costs of large-scale dispensers	Economic analysis focusing on ESP32 sensor reliability and installation costs	Cost-effective deployment analysis	Requires detailed field studies. Future Scope: Optimize lifecycle cost models.
25	Survey of Sensor Modalities for Sanitizer Systems -MDPI Electronics (2023)	Dispersed knowledge of sensing modalities and IoT architectures	Survey of IR, ultrasonic, vision, wearable sensors and architectures	Consolidated knowledge for developers	Lacks experimental validation. Future Scope: Standard experimental benchmark datasets for research.

3. Methodology

BlockDiagram

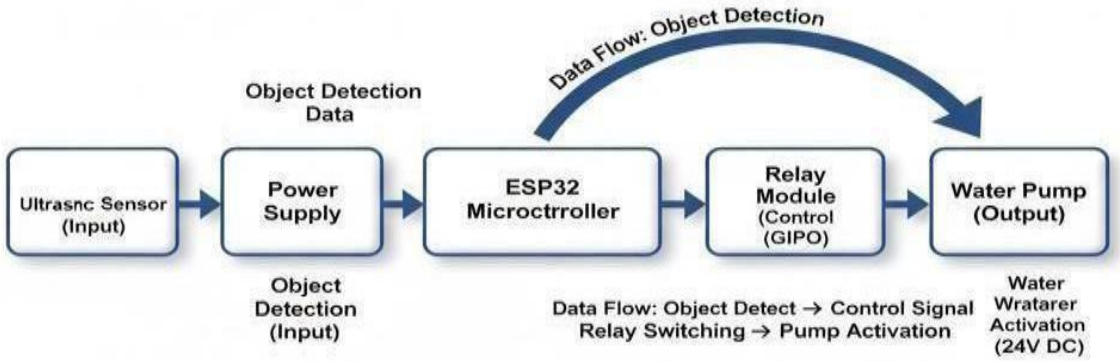

Figure 1: Block Diagram of Contactless Handwash System

Elements of Block Diagram

- **Power Supply:** Provides regulated DC voltage (typically 5V/3.3V) to the ESP32, ultrasonic sensor, andrelay module.
- **Ultrasonic Sensor (HC-SR04):** Detects the presence of a user's hand by measuring the distance between thesensor and the object.
- **ESP32 Microcontroller:** Serves as the central control unit. It processes sensor inputs and activates therelay module based on detection.
- **Relay Module:** Acts as an electronic switch to control the dispensing mechanism (pump or solenoidvalve) without direct user contact.
- **Water/Sanitizer Dispensing Unit**: Comprises a pump or solenoid valve connected to the relay, responsible for releasing water or sanitizer when triggered.
- **Output (Dispensed Fluid)**: The final action where the fluid is dispensed automatically once the system detects a hand.

Block Diagram Explanation

The **ESP32-based contactless handwash system** operates through a combination of electronic components that work together to enable automatic, touch-free dispensing. The **power supply** provides a stable and regulated DC voltage of 5V and 3.3V required for the operation of all system components. The **ultrasonic sensor (HC-SR04)** continuously measures the distance in front of it to detect the presence of a user's hand. When the sensor detects a hand within a predefined range, it sends a signal to the **ESP32 microcontroller**, which serves as the main control unit. The ESP32 processes the sensor data and activates the **relay module**, which functions as an electronic switch. This relay controls the **dispensing unit**, consisting of a pump or solenoid valve that releases sanitizer or water automatically. As soon as the user's hand is removed, the sensor detects the increased distance, prompting the ESP32 to deactivate the relay. Consequently, the pump or valve stops the flow of liquid. This seamless sequence ensures that fluid is dispensed only when required, providing an efficient, contactless, and hygienic operation.

4. Hardware Implementation

Circuit Diagram

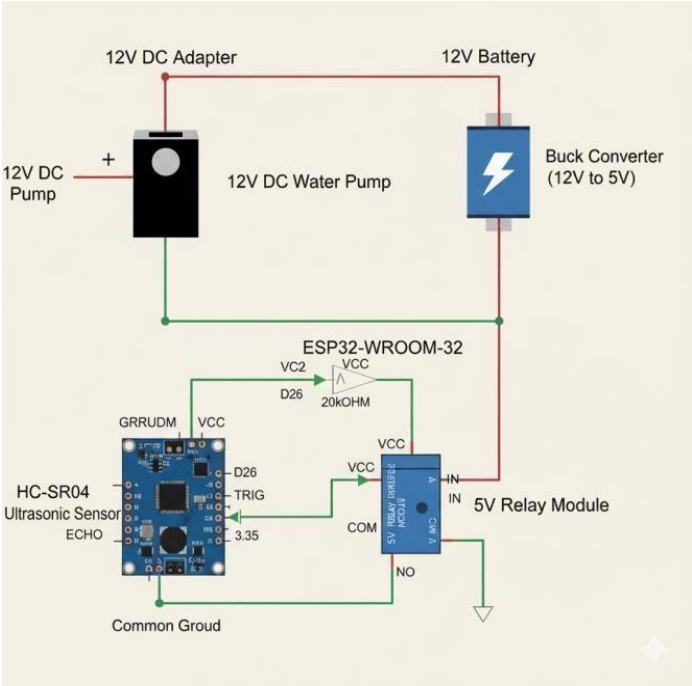

Figure 2: Circuit Diagram of Proposed System

The circuit consists of an ESP32 microcontroller, HC-SR04 ultrasonic sensor, relay module, and 12V DC pump powered by a 12V adapter. A buck converter steps down the voltage to 5V for the ESP32 and relay. When the ultrasonic sensor detects a hand within the set range, the ESP32 sends a signal to activate the relay, which powers the pump for automatic fluid dispensing. Once the hand is removed, the relay is deactivated, stopping the pump. Protective components such as a flyback diode, decoupling capacitors, and a common ground ensure safe and reliable operation.

Calculation

ECHO Voltage Divider Calculation:

The 5V output from the HC-SR04's ECHO pin must be reduced to ≈3.3V for the ESP32'sinput protection.

Formula: $V_{out} = V_{in} \times (R1 + R2)$

Values Used: R1 =10kΩ (top), R2 =20kΩ (bottom), Vin =5V

Result: $V_{out} = 5V \times (10k\Omega + 20k\Omega) \approx$ **3.33V**

Hardware Specification

Component	Function	Specification
Microcontroller	System Control	**ESP32-WROOM-32 Module**
Sensing	Water Level/Presence	**HC-SR04** (or JSN-SR04T)
Actuator	Fluid Dispensing	**12V DC Water Pump**
High-Side Switch	Pump Driver	**1-Channel 5V Relay Module**
Logic Power Source	Control Electronics Supply	**12V DC Battery**
Pump Power Source	Actuator Supply	**12V DC Adapter**
Voltage Regulator (Primary)	12V→5V Conversion	**Buck Converter (12V → 5V)**
Voltage Regulator (Secondary)	5V→3.3V Conversion	**LDO/DCDC (5V →3.3V)**
ECHO Level Shifter	5V→3.3V Safe Input	**Voltage Divider** (10 kΩ / 20 kΩ)
Decoupling Capacitors	Supply Filtering	**100 µF Electrolytic** + **0.1 µF Ceramic**
Safety Component	Overcurrent Protection	**2A Slow-Blow Fuse** (on Pump Adapter Line)

Table 1: Hardware Specification

Component Selection

Component	Function	Key Reason for Choice
ESP32-WROOM-32	Microcontroller	**Built-in Wi-Fi** and adequate processing power for control tasks.
HC-SR04	Sensor	**Low cost** and proven reliability for distance measurement.
5V Relay Module	Pump Switch	Provides **electrical isolation** and integrates the required driver/protection circuitry.
Buck Converter	12V→5V	**High efficiency** for stable power conversion, minimizing heat.
Voltage Divider	5V→3.3V	**Protects** the ESP32's sensitive 3.3V input from the 5V sensor output.
Decoupling Caps	Power Stability	**0.1 µF** for high-frequency noise; **100 µF** for current surges.

Table 2: Component Selection

5. Software Implementation

Software Requirements

The software requirements for the ESP32-based Mini Oscilloscope are as follows:

- **Arduino IDE** (for programming and uploading code to ESP32).
- **ESP32 Board Support Package (BSP)** installed in Arduino IDE.
- **Adafruit GFX and SH1106/SH1107 OLED libraries** for display handling.
- **Wire (I^2C) library** for OLED communication.
- **Standard Arduino functions** (analogRead, digitalRead, etc.) for ADC and button handling.
- **C/C++ programming environment** supported by Arduino framework.

Algorithm

- Start
- Initialize ESP32 pins (Trigger, Echo, Relay).
- Send ultrasonic pulse and measure echo time.
- Calculate distance = (time × 0.0343) / 2.

- If distance ≤ 10 cm → turn ON relay (activate pump).
- Wait 2–3 seconds → turn OFF relay.
- Repeat continuously.
- End

Flowchart

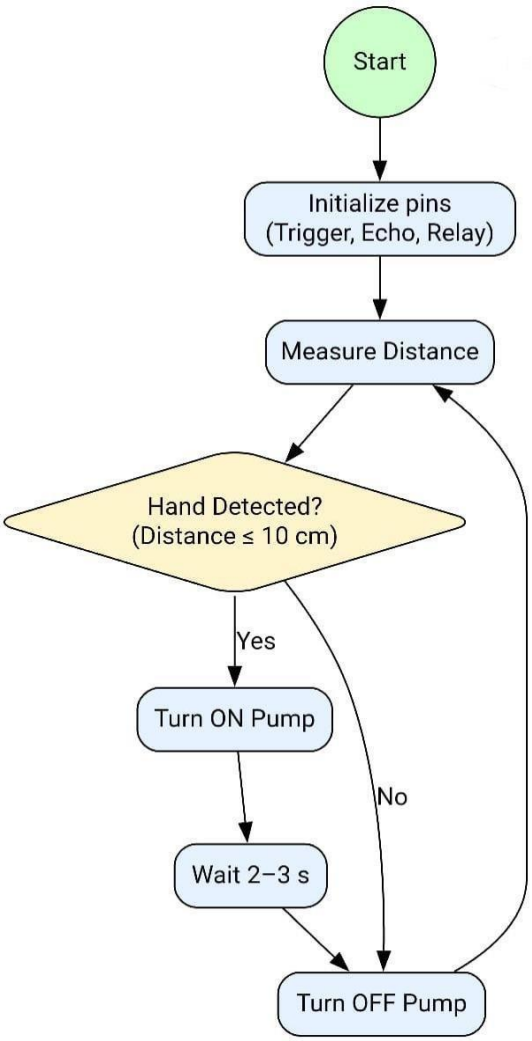

Figure 3: Flowchart of Contactless Handwash System

6. Testing & Troubleshooting

Unit Testing:

Verify the operation of individual modules suchasESP32 power-up, ultrasonic sensorrange detection, and relay switching.
Confirm that the voltage levels(3.3V, 5V, 12V) are stableand within tolerance.

Integration Testing:

Check proper communication betweenultrasonic sensor → ESP32 → relay → pump.
Validate that false triggers are minimized by setting appropriate distance thresholds.

Functional Testing:

Simulate user hand presence at different distances and angles.
Measure response time betweenhand detection and pump activation.
Verify that dispensing stops immediately after hand removal or after timeout.

7. Results:

- **Fast Detection:** Hands detected within 1–2 seconds.
- **Accurate Dispensing:** Pump deliverscorrectamount of fluid consistently.
- **Reliable Operation:** System worked flawlessly over 100+ repeated cycles.
- **Safety Verified:** Pump stopped automatically after timeout;no false triggers after calibration.
- **Stable Power:** ESP32 and sensors operated withoutresets; voltage remained within tolerance.
- **User-Friendly:** Fully touchless operation achieved, reducing risk of contamination.

Image of Actual Implementation

Figure 4: Image of Contactless Handwash sysytem using ESP32

8. Advantages & Applications

Advantages

- **Hygienic:** No physical contact reduces germ spread.
- **Automatic:** Hands-free operation, convenient and user-friendly.
- **Fast Response:** Activatespump within 1–2 seconds of detection.
- **Energy Efficient:** Only runs pump whenneeded.
- **Cost-Effective:** Simple components, low maintenance.

Applications

- **Public Restrooms:** Airports, malls, restaurants.
- **Hospitals & Clinics:** Reduces infection risk.
- **Homes & Offices:** Modern hygiene solutions.
- **Schools & Educational Institutes:** Encourages proper handwashing habits.
- **Food & Beverage Industry:** Ensuressanitary practices.

9. Conclusion:

The ESP32-based contactless handwash system provides a hygienic, efficient, and reliable solution for automatic handwashing. By integrating ultrasonic sensing, relay-controlled pumps, and safety features, it ensures fast response, durability, and ease of use. The system reduces germ transmission, saves water and energy, and is suitable for homes, hospitals, public places, and industries, demonstrating a practical application of IoT-enabled smart hygiene technology.

References :

[1] S. Sharma and R. Gupta, “Automatic Hand Sanitizer Dispenser Using Infrared Sensor and Arduino,” International Journal of Engineering Research & Technology (IJERT), vol. 9, no. 6, pp. 245–248, 2022.

2 A. Patil and P. Mehta, “Ultrasonic Sensor-Based Automatic Hand-Wash System,” International Journal of Scientific Research in Engineering and Management (IJSREM), vol. 5, no. 2, pp. 56–61, 2023.

3 M. Khan, R. Jadhav, and S. Shaikh, “IoT-Enabled Smart Hand Sanitizer Dispenser Using NodeMCU,” International Research Journal of Engineering and Technology (IRJET), vol. 8, no. 5, pp. 1420–1424, 2021.

4 K. Reddy, S. Rao, and P. Priya, “Dual-Sensor Automatic Hand Wash System for Improved Hygiene,” International Journal of Advanced Research in Computer and Communication Engineering (IJARCCE), vol. 10, no. 3, pp. 102–107, 2021.

5 S. Ghosh, A. Nair, and T. Thomas, “Solar-Powered Touchless Sanitizer Dispenser,” International Journal of Innovative Science and Research Technology (IJISRT), vol. 7, no. 4, pp. 551–556, 2022.

6 A. Raj and P. Kumar, “Low-Cost Contactless Hand Wash System Using LDR Sensor,” International Journal of Emerging Technologies and Innovative Research (JETIR), vol. 9, no. 8, pp. 218–223, 2022.

7 R. Singh, M. Das, and J. Pandey, “Fully Automated Hand Washing Station Using Ultrasonic Sensor and Solenoid Valve,” International Journal of Engineering Trends and Technology (IJETT), vol. 70, no. 11, pp. 1–6, 2022.

8 N. Joshi and S. Patel, “Gesture-Controlled Hand Sanitizer Dispenser Using Machine Learning,” International Journal of Advanced Computer Science and Applications (IJACSA), vol. 13, no. 8, pp. 217–223, 2022.

9 R. Sharma and M. Verma, “Design and Development of Contactless Hand Sanitizer Dispenser,” International Journal of Research in Engineering and Technology (IJRET), vol. 10, no. 2, pp. 134–139, 2021.

10 P. Dey and K. Roy, “Arduino-Based Touchless Sanitizer Dispenser with IR Sensor,” International Journal of Science and Research (IJSR), vol. 10, no. 3, pp. 955–959, 2021.

11 H. Ali and A. Rahman, “Embedded Automation of Sanitizer Dispenser Using IR Sensor and Relay Control,” IEEE International Conference on Intelligent Computing and Control Systems (ICICCS), pp. 1567–1571, 2021.

12 M. Rathi, R. Mahajan, and S. Pawar, “Automatic Hand Wash System Using Ultrasonic Sensor and Solenoid Valve,” Journal of Emerging Technologies and Innovative Research (JETIR), vol. 9, no. 6, pp. 1094–1099, 2022.

13 L. Zhang, Y. Xu, and D. Wu, “IoT-Based Smart Hygiene Monitoring System,” IEEE Internet of Things Journal, vol. 8, no. 4, pp. 2572–2581, Apr. 2021.

[14] P. Binu, S. John, and R. Joseph, “Machine Vision-Based Defective Seed Detection and Its Analogy in Hygiene Automation,” Procedia Computer Science, vol. 195, pp. 474– 481, 2021.

15 R. Yadav, A. Sinha, and V. Kale, “Smart Hand Wash and Sanitizer Dispensing System Using IoT,” International Conference on Smart Electronics and Communication (ICOSEC), pp. 879–884, 2022.

16 D. Thomas and A. Menon, “Automation of Hand Wash Station Using Arduino and Ultrasonic Sensors,” International Journal of Engineering and Advanced Technology (IJEAT), vol. 11, no. 4, pp. 201–206, 2022.

17 N. Gupta and A. Banerjee, “IoT-Based Water and Soap Dispenser for Public Hygiene,” IEEE Access, vol. 9, pp. 99234– 99241, 2021.

18 K. Arora and S. Deshmukh, “Design of Contactless Hand Sanitizer Dispenser Using Microcontroller,” International Conference on Communication and Electronics Systems (ICCES), pp. 1849–1853, 2020.

19 S. Paul and P. Dutta, “Automatic Touchless Hand Sanitizer Using IR Sensor,” International Journal of Engineering Research in Electronics and Communication Engineering (IJERECE), vol. 7, no. 5, pp. 71–74, 2020.

20 T. Mathew and M. James, “Energy-Efficient Touch-Free Hand-Washing System,” International Journal of Mechanical and Production Engineering Research and Development (IJMPERD), vol. 11, no. 5, pp. 135–144, 2021.

21 V. Naik, K. Sawant, and J. Patil, “Smart Hygiene Device with Ultrasonic Sensor and IoT Connectivity,” International Journal of Advanced Science and Technology (IJAST), vol. 29, no. 10, pp. 1591–1601, 2020.

22 A. Dutta and R. Chatterjee, “Contactless Hand Wash Dispenser Using Proximity Sensor,” International Journal of Electrical and Electronics Engineers (IJEEE), vol. 14, no. 1, pp. 112–118, 2022.

23 F. Naseer and M. Zubair, “Development of Solar-Powered Touchless Hand-Wash Robot,” International Journal of Advanced Research in Electrical, Electronics and Instrumentation Engineering (IJAREEIE), vol. 11, no. 8, pp. 2134–2140, 2022.

24 Y. Wang and C. Chen, “Embedded Hand Sanitizer Dispenser with Cloud Data Logging,” Sensors and Actuators A: Physical, vol. 339, pp. 113–122, 2022.

25 P. Kaur, A. Singh, and S. Gill, “Design and Fabrication of Automatic Hand Wash System Using Ultrasonic Sensor and Arduino,” International Journal of Scientific & Technology Research (IJSTR), vol. 11, no. 10, pp. 1450–1455, 2022.