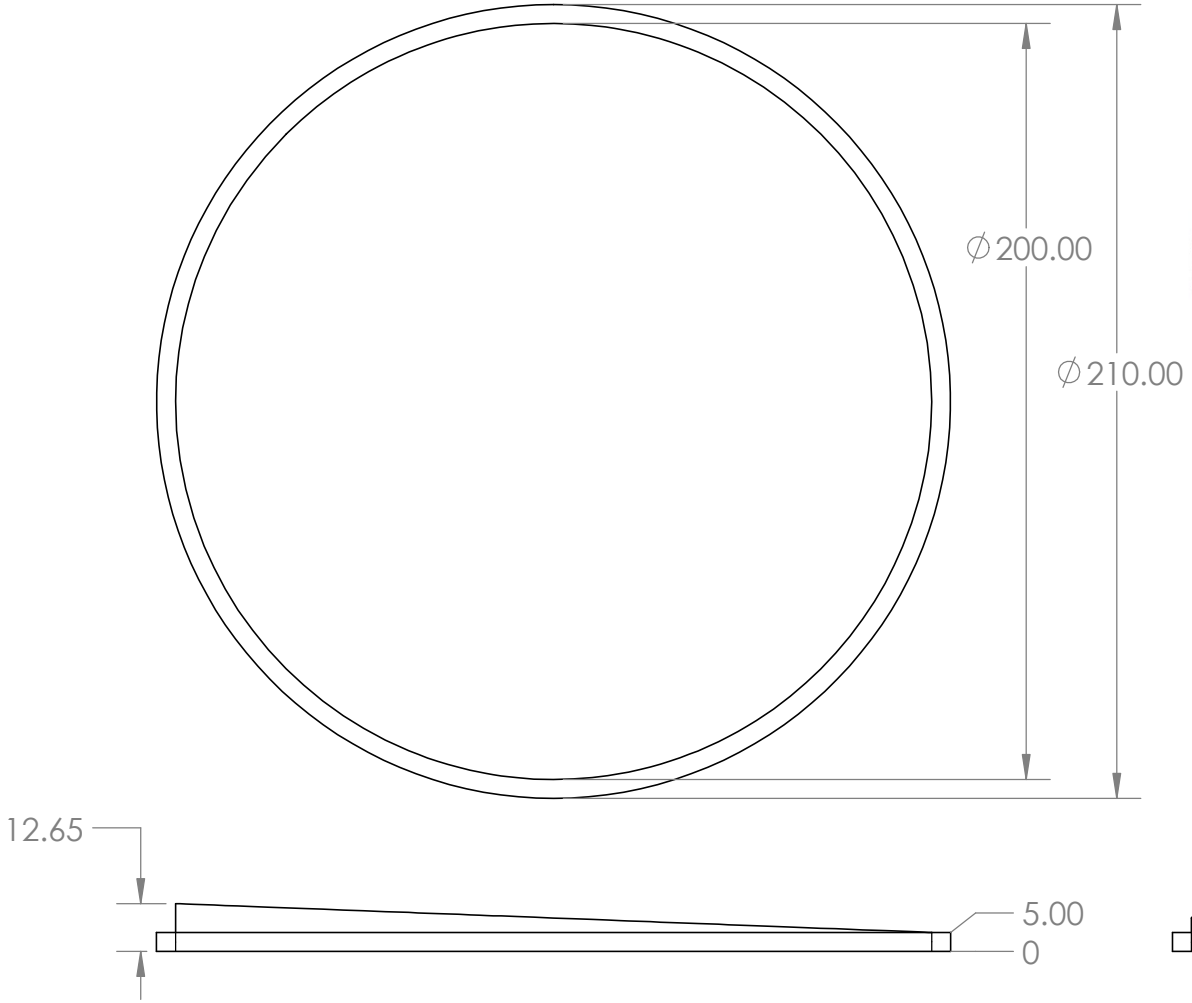

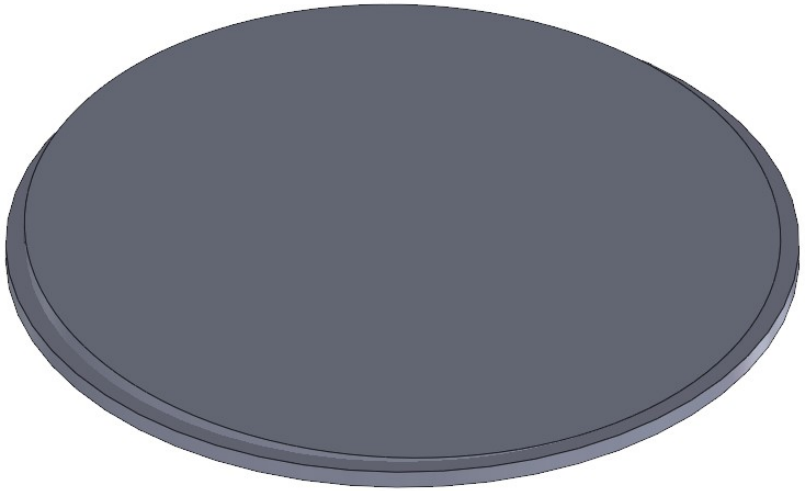

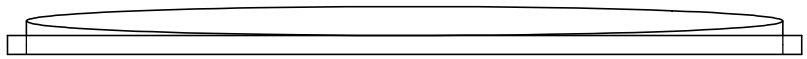

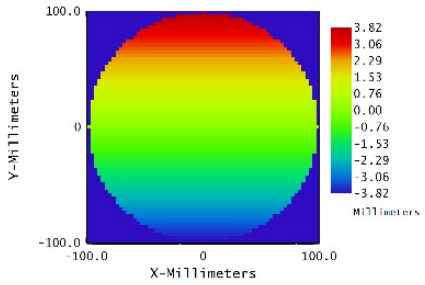

Surface Sag Map

7/28/2021
Surface 13: wedge_cilt
Units are Millimeters.

Width = 200, Decenter x = 0, y = 0 Millimeters.

Zemax
Zemax OpticStudio 16.5 SP2

UNLESS OTHERWISE SPECIFIED: DIMENSIONS ARE IN MILLIMETERS SURFACE FINISH: TOLERANCES: LINEAR: ANGULAR:	FINISH:				DEBURR AND BREAK SHARP EDGES	DO NOT SCALE DRAWING / REVISION V1
	NAME	SIGNATURE	DATE			TITLE: Wedge cam 21
DRAWN	P. Gallardo		8/1/21			
CHK'D						
APPV'D						
MFG						
Q.A				MATERIAL: Alumina		DWG NO. wedge_cam21 / A4
				WEIGHT:		SCALE:1:2 / SHEET 1 OF 1