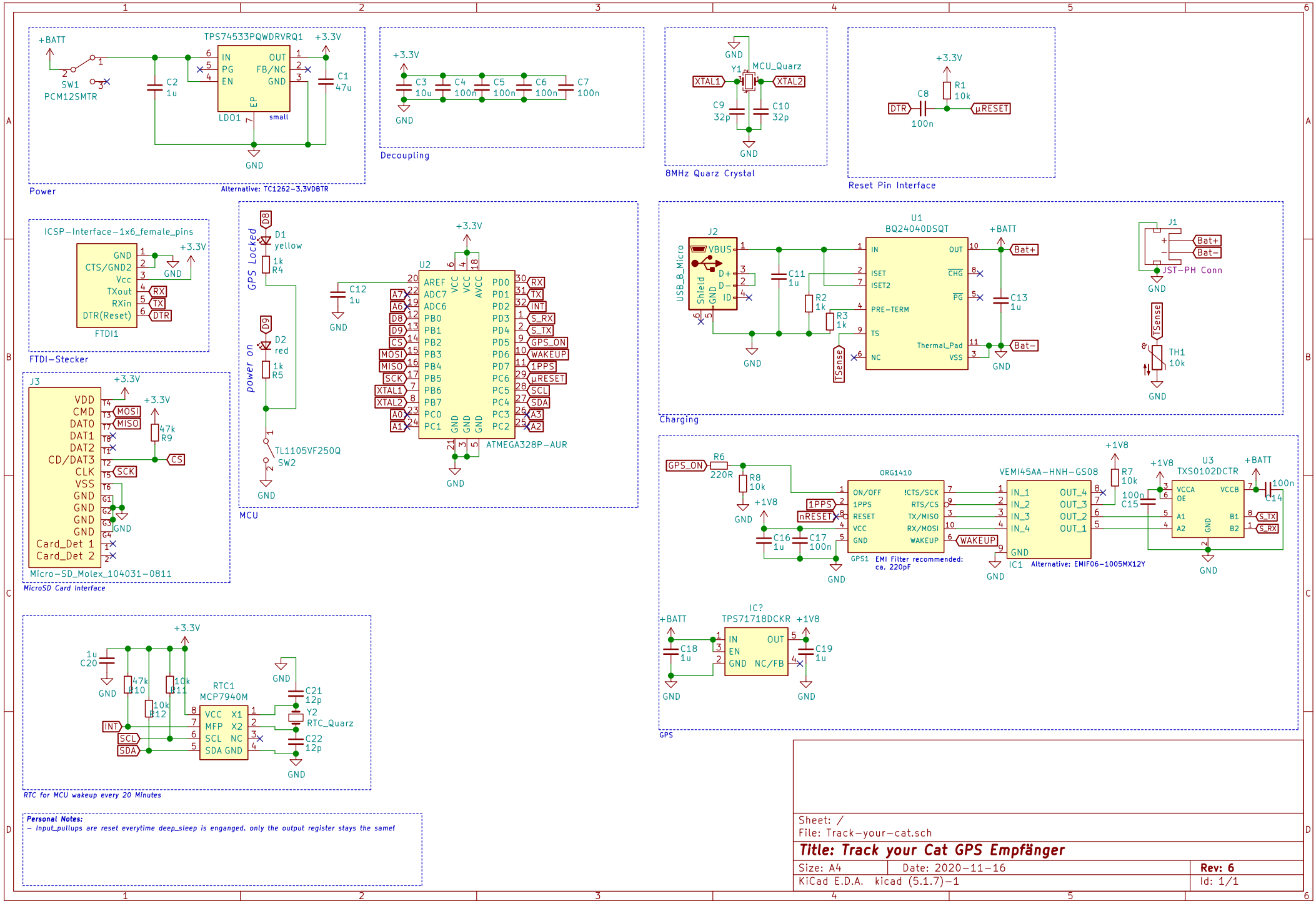
Power
TPS74533PQWDRVRQ1
+BATT
+3.3V
SW1
PCM12SMTR
C2 1u
C1 47u
LDO1
small
GND
Alternative: TC1262-3.3VDBTR
Decoupling
C3 10u
C4 100n
C5 100n
C6 100n
C7 100n
8MHz Quarz Crystal
MCU_Quarz
Y1
XTAL1
XTAL2
C9 32p
C10 32p
Reset Pin Interface
R1 10k
C8 100n
DTR
µRESET
ICSP-Interface-1x6_female_pins
FTDI1
FTDI-Stecker
J3
Micro-SD_Molex_104031-0811
MicroSD Card Interface
MOSI
MISO
SCK
CS
R9 47k
RTC1
MCP7940M
C20 1u
R10 47k
R11 10k
R12 10k
C21 12p
C22 12p
Y2
RTC_Quarz
INT
SCL
SDA
RTC for MCU wakeup every 20 Minutes
GPS Locked
D1 yellow
R4 1k
power on
D2 red
R5 1k
TL1105VF250Q
SW2
C12 1u
U2
ATMEGA328P-AUR
RX
TX
S_RX
S_TX
GPS_ON
WAKEUP
1PPS
µRESET
A3
A2
MCU
J2
USB_B_Micro
VBUS
Shield
C11 1u
R2 1k
R3 1k
TSense
U1
BQ24040DSQT
Bat+
Bat-
C13 1u
J1
JST-PH Conn
TH1 10k
Charging
GPS_ON
R6 220R
R8 10k
C16 1u
C17 100n
ORG1410
1PPS
nRESET
WAKEUP
GPS1
EMI Filter recommended: ca. 220pF
VEMI45AA-HNH-GS08
IC1
Alternative: EMIF06-1005MX12Y
R7 10k
C15 100n
U3
TXS0102DCTR
C14 100n
S_TX
S_RX
IC?
TPS71718DCKR
C18 1u
C19 1u
GPS
Personal Notes:
- Input_pullups are reset everytime deep_sleep is enganged. only the output register stays the same!
Sheet: /
File: Track-your-cat.sch
Title: Track your Cat GPS Empfänger
Size: A4
Date: 2020-11-16
Rev: 6
KiCad E.D.A. kicad (5.1.7)-1
Id: 1/1