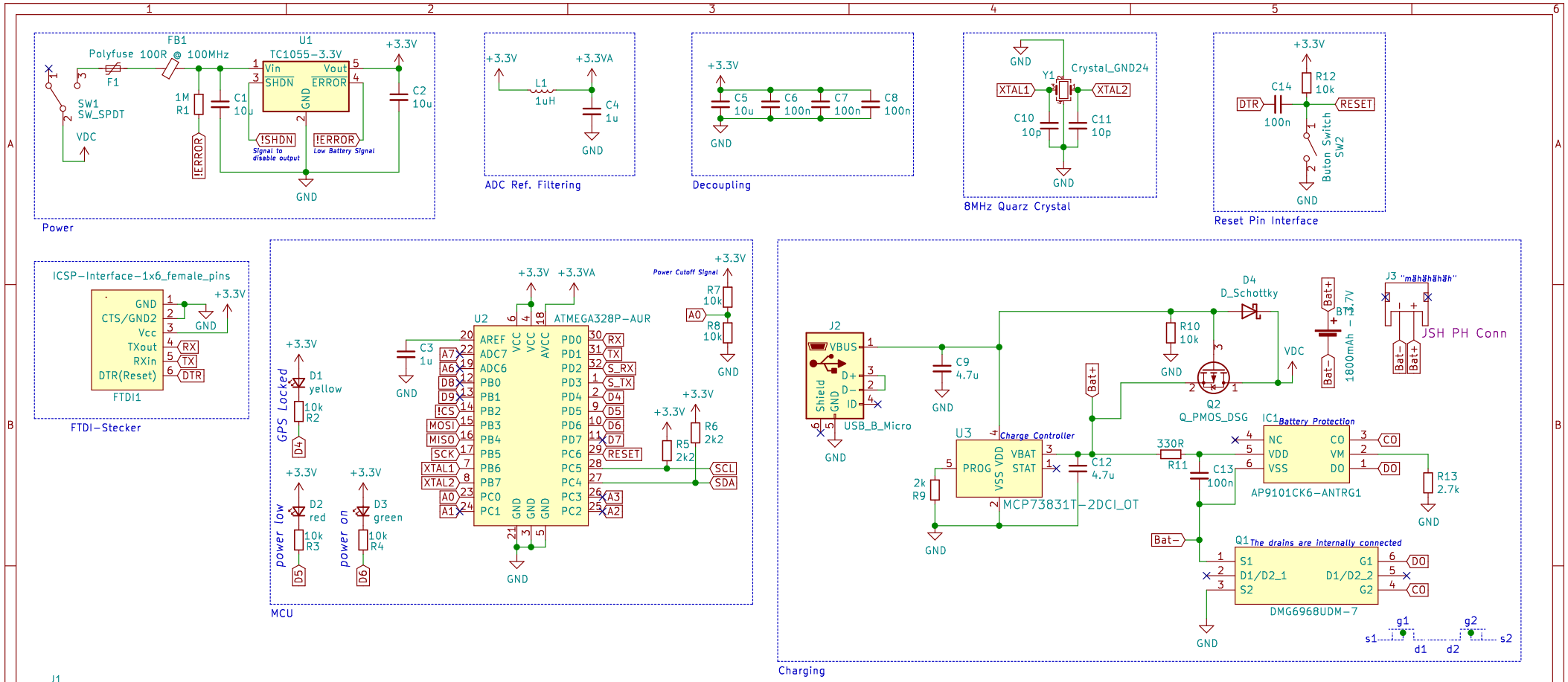

Sheet: /
File: Track-your-cat.sch

Title: Track your Cat GPS Empfänger

Size: A4	Date: 2020-11-08	Rev: 3
KiCad E.D.A. kicad (5.1.7)-1		Id: 1/1