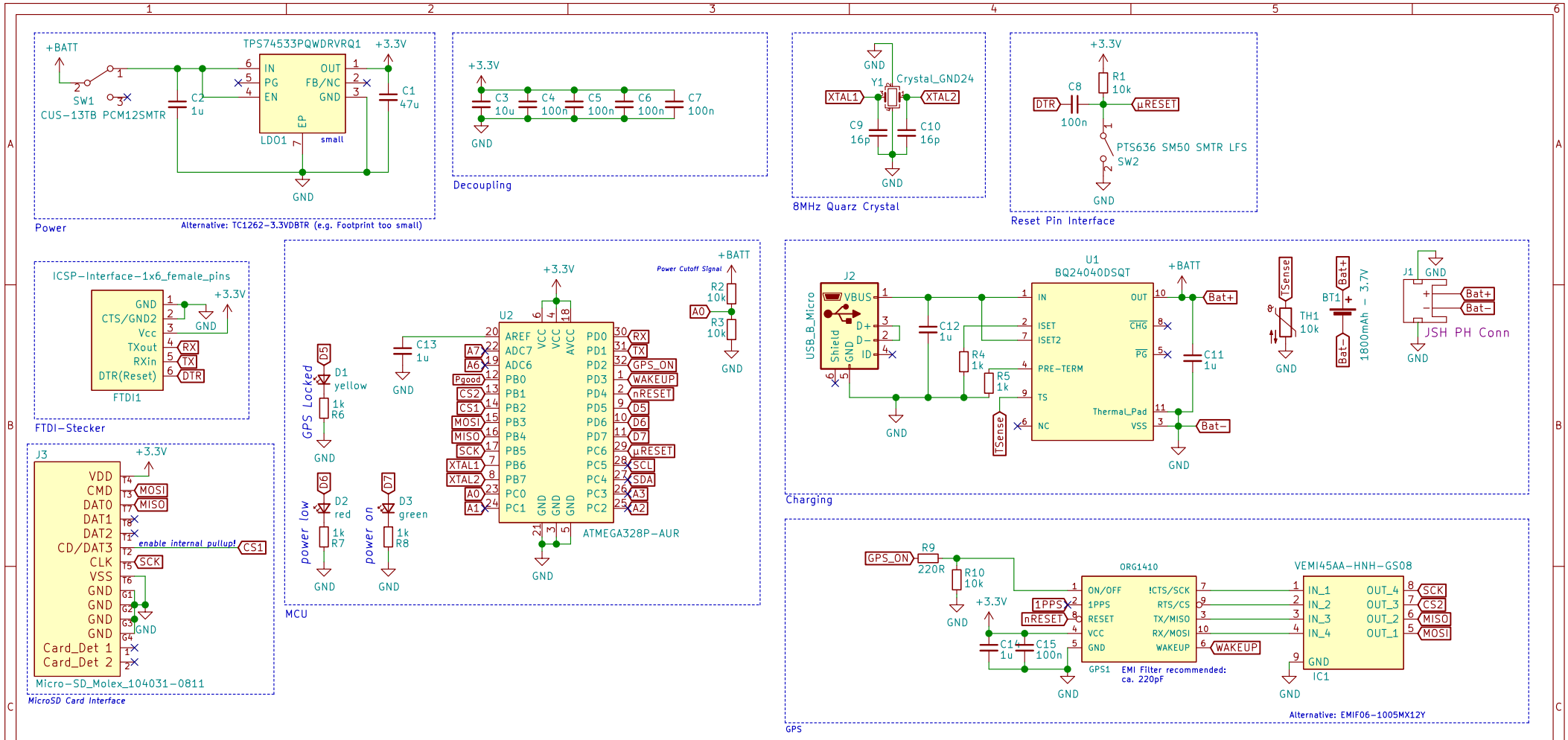


Sheet: /
File: Track-your-cat.sch

**Title: Track your Cat GPS Empfänger**

| | | |
|---|---|---|
| Size: A4 | Date: 2020-11-16 | Rev: 5 |
| KiCad E.D.A. kicad (5.1.7)-1 | | Id: 1/1 |