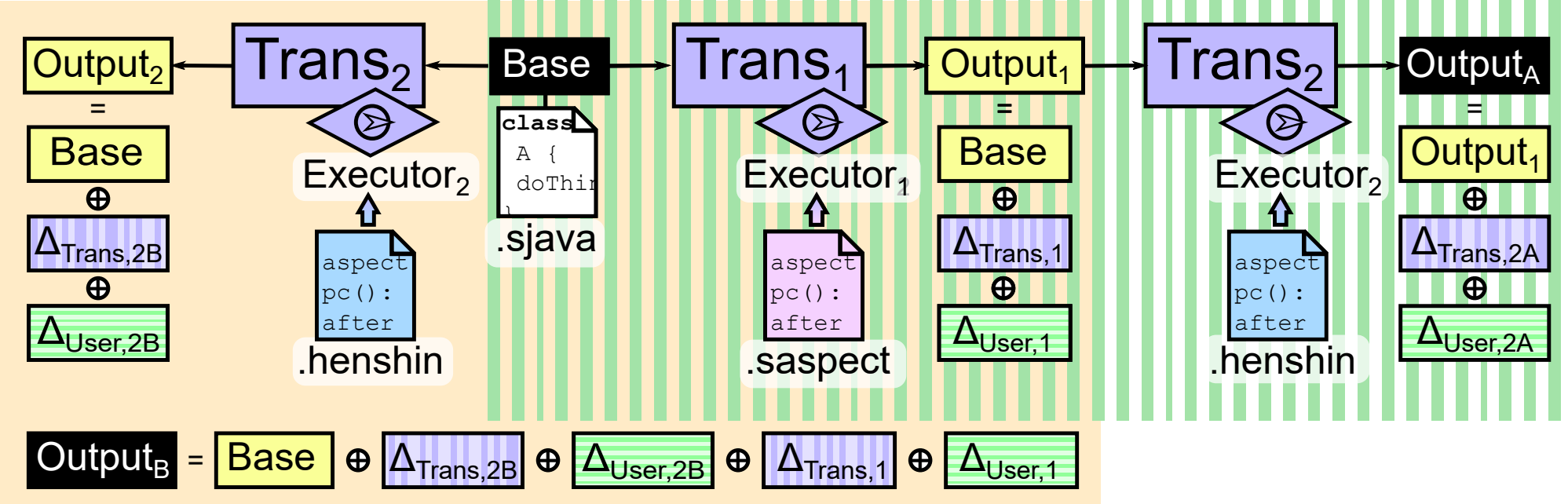

(a) Independent calculation

(b) chained calculation