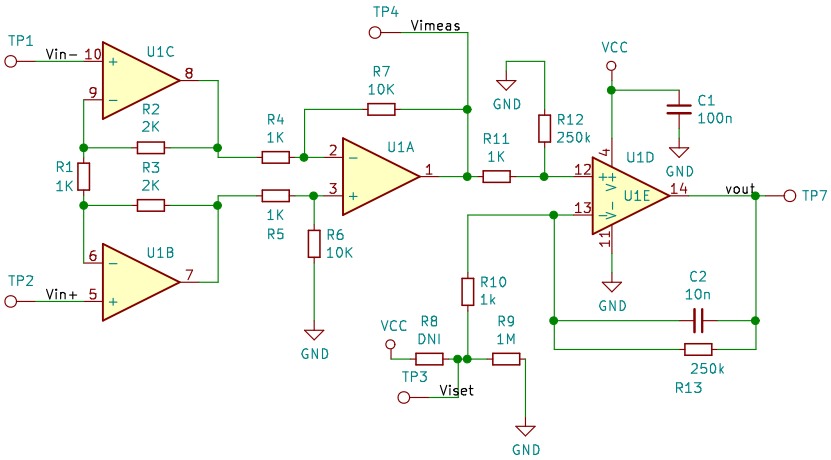

Sheet: /
File: instrumentationamp.sch

Title:

Size: A4	Date:	Rev:
KiCad E.D.A. kicad 5.0.0-fee4fd165ubuntu17.10.1		Id: 1/1