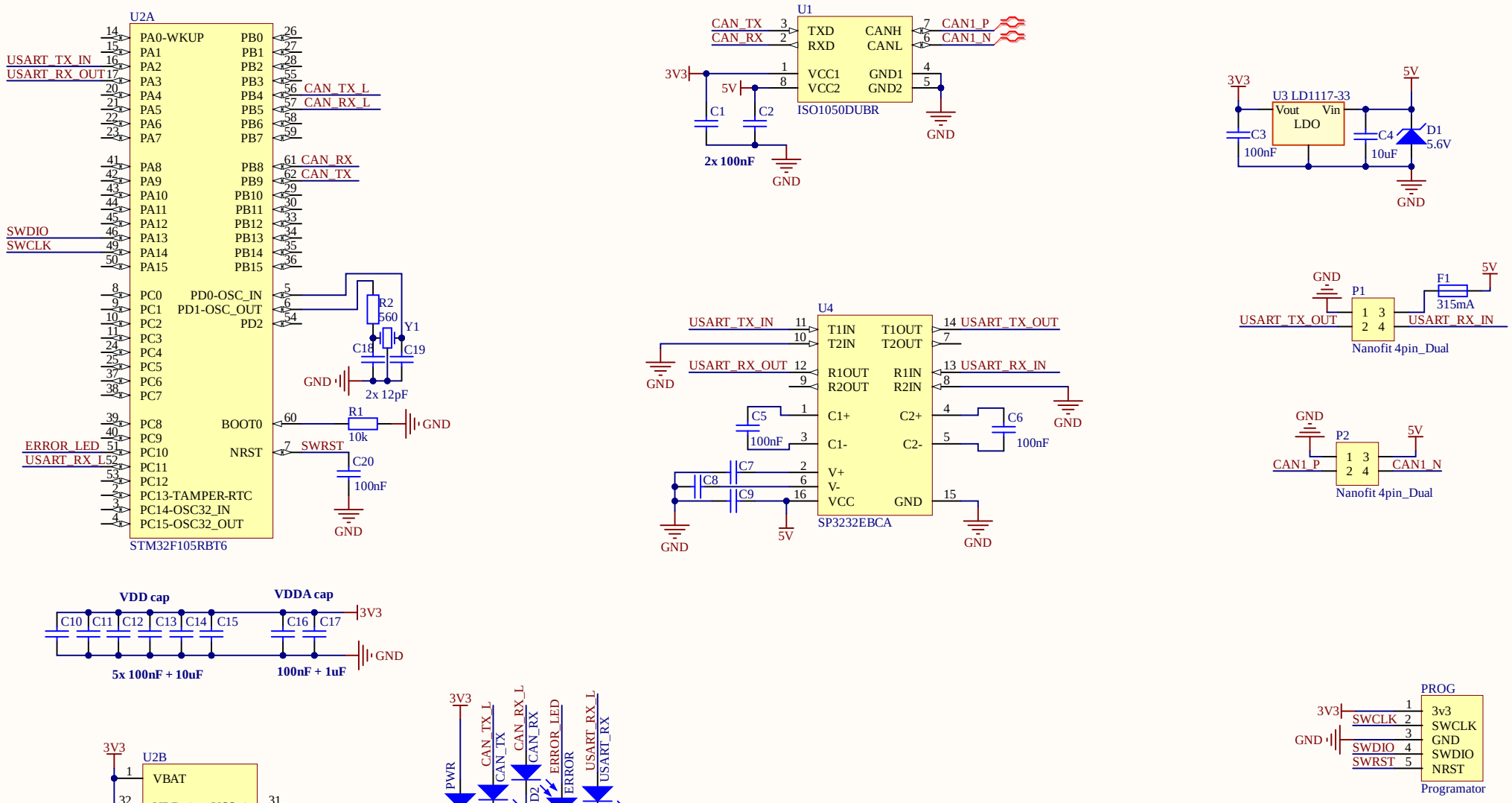

Title: IMU Bridge module			
Drawn by: Samuel Mazur		Season: 2021/2022	
Size: A4	Date: 25. 1. 2022	Sheet 1 of 1	STUBA GREEN TEAM
File: Sheet1.SchDoc			