12V DC JACK INPUT AND PROTECTION (600mA MAX)

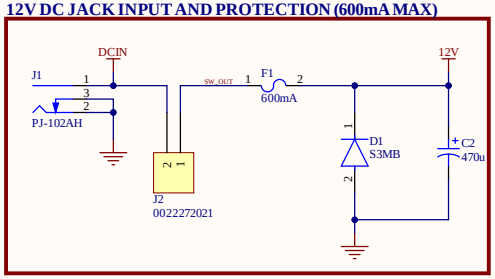

10VA VOLTAGE REGULATION

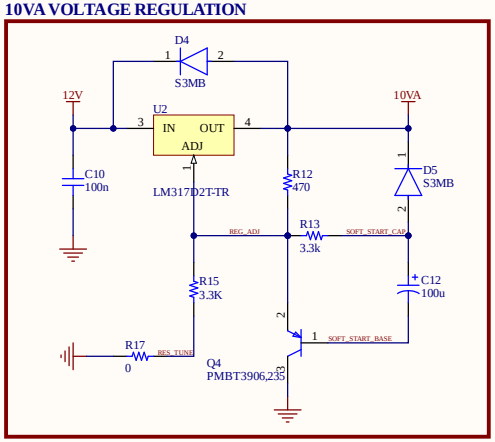

VOLUME CONTROL

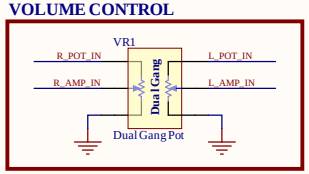

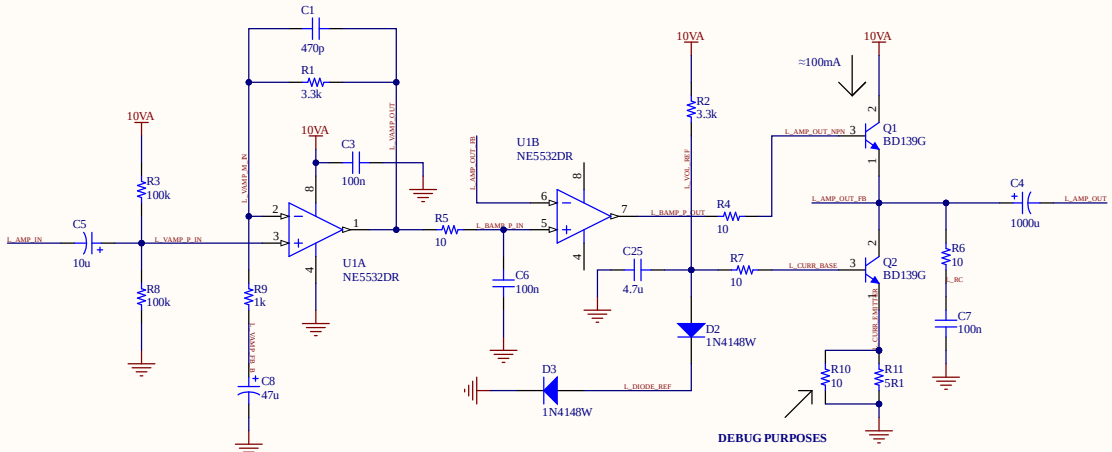

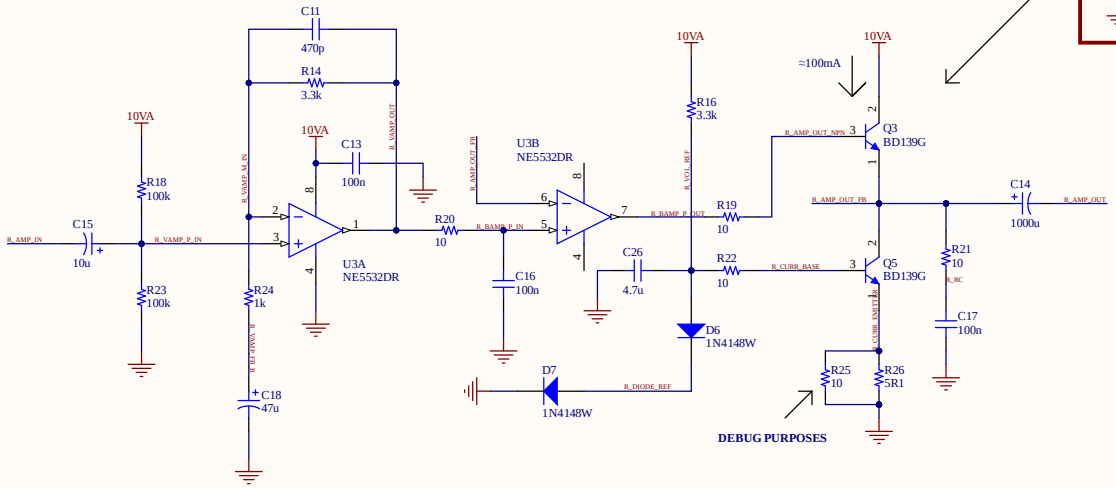

OUTPUT STAGE DECOUPLING

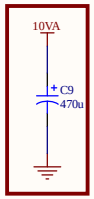

Title: BeatNTweat-Phemius-l Analog		
Size: A3	Number: 1	Revision: 1
Date: 2/27/2024	Sheet of 1	
File: C:\Users\..\Phemius-Analog.SchDoc	Drawn By: Patsaoglou P.	

3.3V VOLTAGE REGULATION

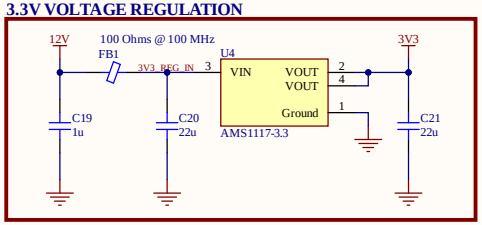

MCU AND INPUT CONTROL

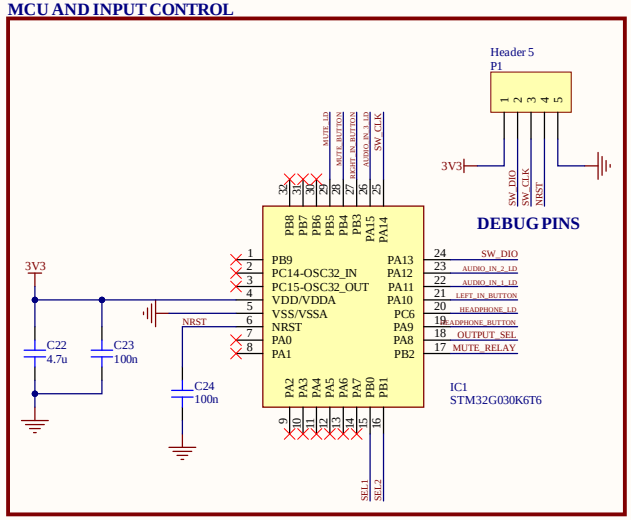

MUTE/SOFT START RELAY RELAY

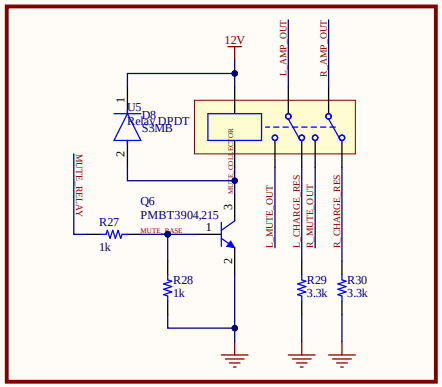

AUDIO INPUT SELECTOR

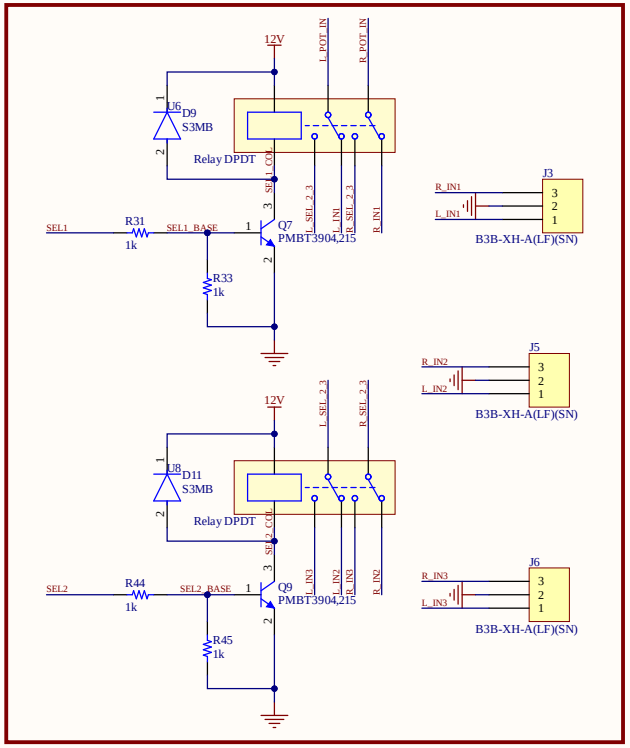

FRONT PANEL IO

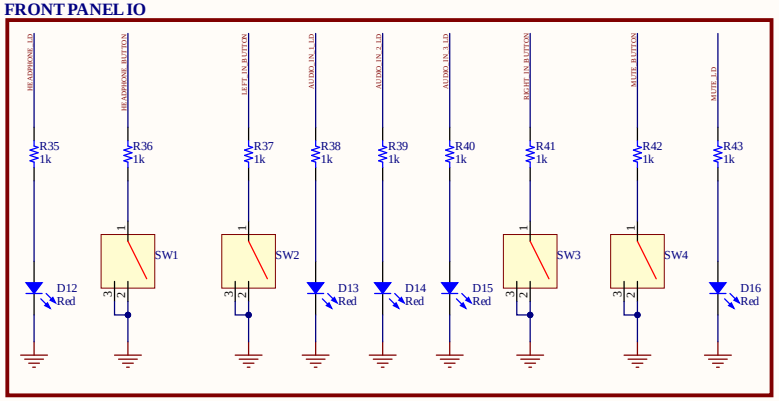

OUTPUT SELECTION

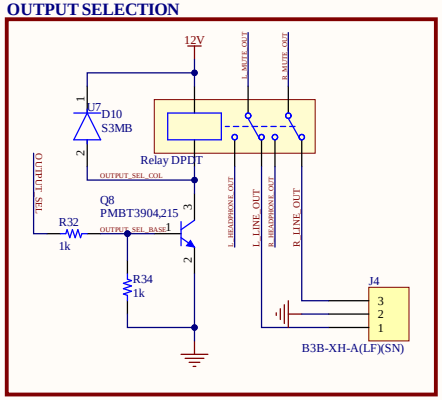

HEADPHONE CONNECTOR 6.3MM

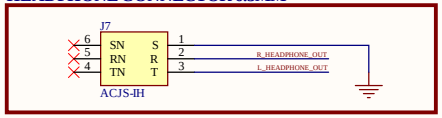

Title: BeatNTweat-Phemius-I Input/Output Selector		
Size: A3	Number: 1	Revision: 1
Date: 2/27/2024	Sheet of 1	
File: C:\Users\..\Phemius-InputOutputSelector.SchDoc	Drawn By: Patsaoglou P.	