POWER IN/OUT CIRCUITRY

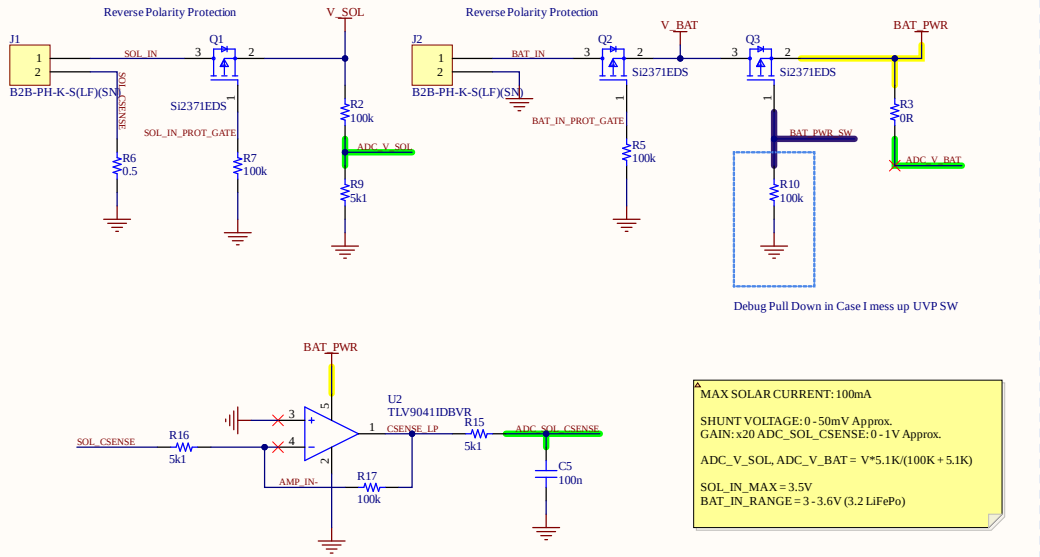

MAX SOLAR CURRENT: 100mA

SHUNT VOLTAGE: 0 - 50mV Approx.
GAIN: x20 ADC_SOL_CSENSE: 0 - 1V Approx.

ADC_V_SOL, ADC_V_BAT = V*5.1K/(100K + 5.1K)

SOL_IN_MAX = 3.5V
BAT_IN_RANGE = 3 - 3.6V (3.2 LiFePo)

SPV1050 POWER HARVESTER

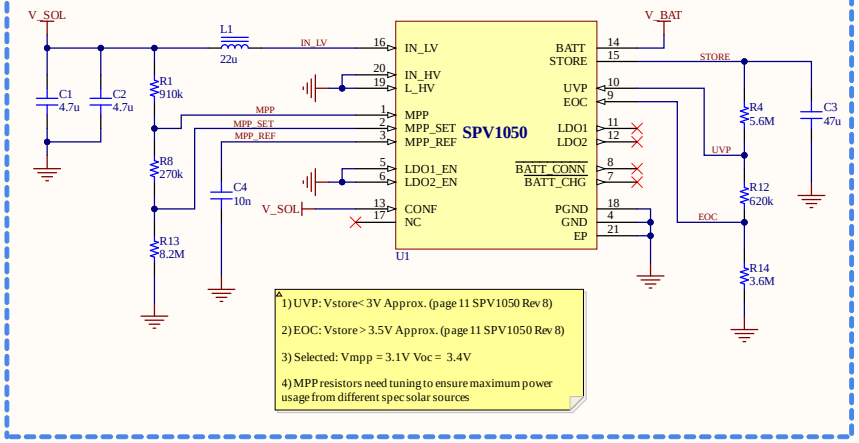

1) UVP: Vstore< 3V Approx. (page 11 SPV1050 Rev 8)

2) EOC: Vstore > 3.5V Approx. (page 11 SPV1050 Rev 8)

3) Selected: Vmpp = 3.1V Voc = 3.4V

4) MPP resistors need tuning to ensure maximum power usage from different spec solar sources

UVP for BAT_PWR

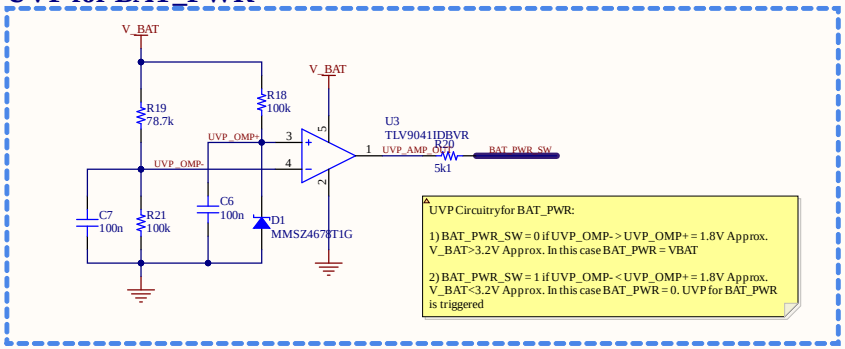

UVP Circuitry for BAT_PWR:

1) BAT_PWR_SW = 0 if UVP_OMP- > UVP_OMP+ = 1.8V Approx.
V_BAT>3.2V Approx. In this case BAT_PWR = VBAT

2) BAT_PWR_SW = 1 if UVP_OMP- < UVP_OMP+ = 1.8V Approx.
V_BAT<3.2V Approx. In this case BAT_PWR = 0. UVP for BAT_PWR is triggered

ESP32-C6 SOC MODULE

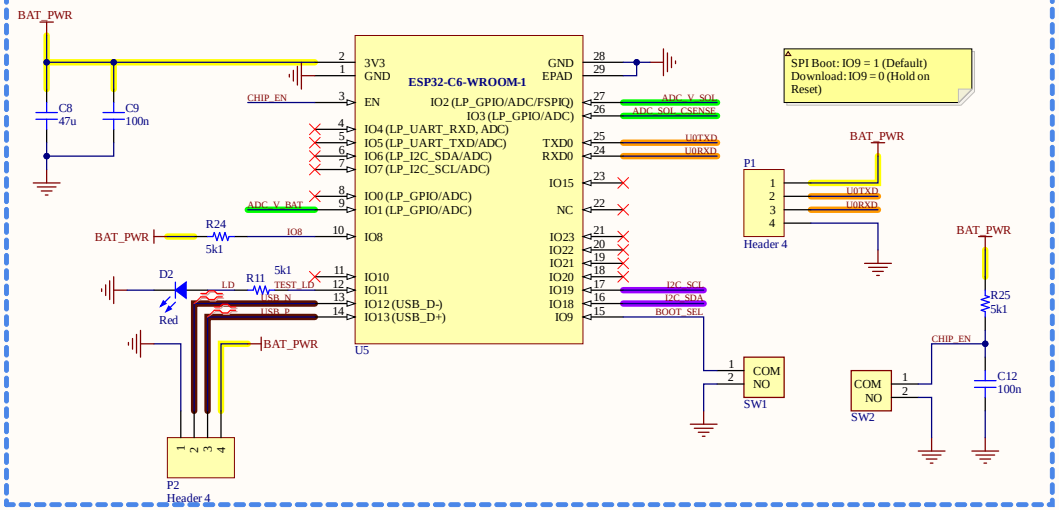

SPI Boot: IO9 = 1 (Default)
Download: IO9 = 0 (Hold on Reset)

BME-280 AND I2C CONECTOR

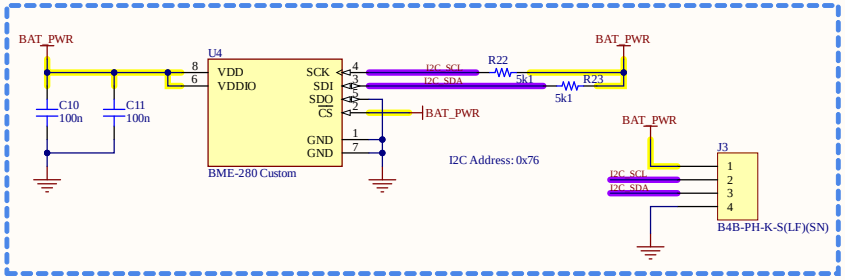

I2C Address: 0x76

NOTES:
1) Harvester IC is only used for battery charging

2) Harvester UVP is set at 3V, 0.2V above battery switch Ref for safety margin. Battery should be above a safe threshold voltage level for BAT_PWR to be enabled

Title: S-NODE-1		
Size: A3	Number: 1	Revision: Rev 1
Date: 6/30/2024		Sheet of 1
File: C:\Users\..\S-NODE-1.SchDoc		Drawn By: Patsaoglou P.