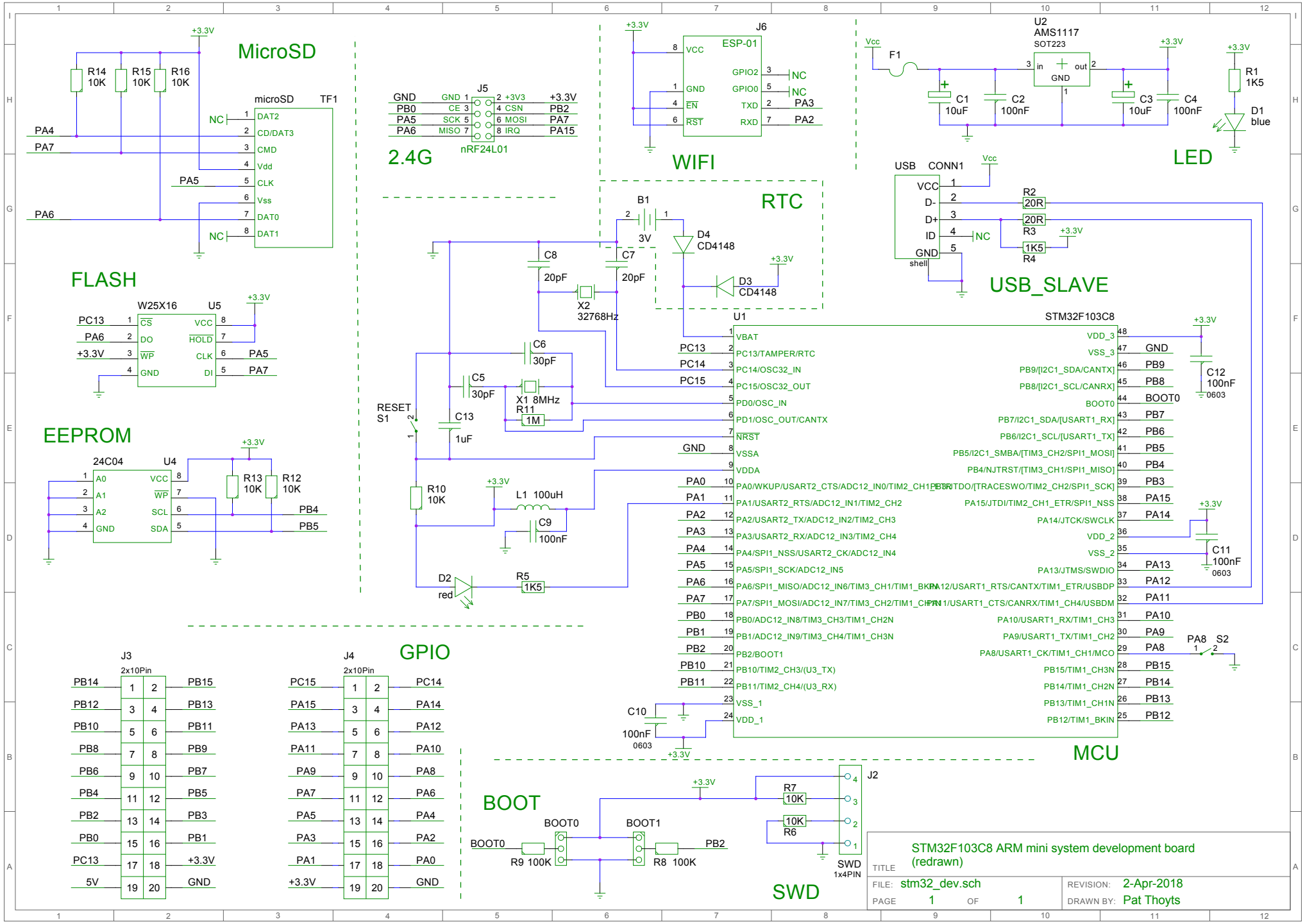
MicroSD
microSD
TF1
R14 10K
R15 10K
R16 10K
+3.3V
PA4
PA7
PA5
PA6
NC
DAT2
CD/DAT3
CMD
Vdd
CLK
Vss
DAT0
DAT1
2.4G
J5
nRF24L01
GND
PB0
PA5
PA6
CE
SCK
MISO
+3V3
CSN
MOSI
IRQ
PB2
PA7
PA15
WIFI
J6
ESP-01
VCC
GND
EN
RST
GPIO2
GPIO0
TXD
RXD
PA3
PA2
LED
U2
AMS1117
SOT223
in
out
F1
Vcc
C1 10uF
C2 100nF
C3 10uF
C4 100nF
R1 1K5
D1 blue
USB_SLAVE
USB
CONN1
VCC
D-
D+
ID
GND
shell
R2 20R
R3 20R
R4 1K5
RTC
B1
3V
D4 CD4148
D3 CD4148
C8 20pF
C7 20pF
X2 32768Hz
FLASH
W25X16
U5
CS
DO
WP
GND
VCC
HOLD
CLK
DI
PC13
PA6
+3.3V
PA5
PA7
EEPROM
24C04
U4
A0
A1
A2
GND
VCC
WP
SCL
SDA
R13 10K
R12 10K
PB4
PB5
C6 30pF
C5 30pF
X1 8MHz
R11 1M
C13 1uF
RESET
S1
R10 10K
L1 100uH
C9 100nF
D2 red
R5 1K5
U1
STM32F103C8
VBAT
PC13/TAMPER/RTC
PC14/OSC32_IN
PC15/OSC32_OUT
PD0/OSC_IN
PD1/OSC_OUT/CANTX
NRST
VSSA
VDDA
PA0/WKUP/USART2_CTS/ADC12_IN0/TIM2_CH1_ETR
PA1/USART2_RTS/ADC12_IN1/TIM2_CH2
PA2/USART2_TX/ADC12_IN2/TIM2_CH3
PA3/USART2_RX/ADC12_IN3/TIM2_CH4
PA4/SPI1_NSS/USART2_CK/ADC12_IN4
PA5/SPI1_SCK/ADC12_IN5
PA6/SPI1_MISO/ADC12_IN6/TIM3_CH1/TIM1_BKIN
PA7/SPI1_MOSI/ADC12_IN7/TIM3_CH2/TIM1_CH1N
PB0/ADC12_IN8/TIM3_CH3/TIM1_CH2N
PB1/ADC12_IN9/TIM3_CH4/TIM1_CH3N
PB2/BOOT1
PB10/TIM2_CH3/(U3_TX)
PB11/TIM2_CH4/(U3_RX)
VSS_1
VDD_1
VDD_3
VSS_3
PB9/[I2C1_SDA/CANTX]
PB8/[I2C1_SCL/CANRX]
BOOT0
PB7/I2C1_SDA/[USART1_RX]
PB6/I2C1_SCL/[USART1_TX]
PB5/I2C1_SMBA/[TIM3_CH2/SPI1_MOSI]
PB4/NJTRST/[TIM3_CH1/SPI1_MISO]
PB3/JTDO/[TRACESWO/TIM2_CH2/SPI1_SCK]
PA15/JTDI/TIM2_CH1_ETR/SPI1_NSS
PA14/JTCK/SWCLK
VDD_2
VSS_2
PA13/JTMS/SWDIO
PA12/USART1_RTS/CANTX/TIM1_ETR/USBDP
PA11/USART1_CTS/CANRX/TIM1_CH4/USBDM
PA10/USART1_RX/TIM1_CH3
PA9/USART1_TX/TIM1_CH2
PA8/USART1_CK/TIM1_CH1/MCO
PB15/TIM1_CH3N
PB14/TIM1_CH2N
PB13/TIM1_CH1N
PB12/TIM1_BKIN
C12 100nF 0603
C11 100nF 0603
C10 100nF 0603
PA8
S2
MCU
GPIO
J3
2x10Pin
PB14
PB12
PB10
PB8
PB6
PB4
PB2
PB0
PC13
5V
PB15
PB13
PB11
PB9
PB7
PB5
PB3
PB1
+3.3V
GND
J4
2x10Pin
PC15
PA15
PA13
PA11
PA9
PA7
PA5
PA3
PA1
+3.3V
PC14
PA14
PA12
PA10
PA8
PA6
PA4
PA2
PA0
GND
BOOT
BOOT0
BOOT1
R9 100K
R8 100K
PB2
R7 10K
R6 10K
J2
SWD
1x4PIN
TITLE
STM32F103C8 ARM mini system development board (redrawn)
FILE: stm32_dev.sch
PAGE 1 OF 1
REVISION: 2-Apr-2018
DRAWN BY: Pat Thoyts