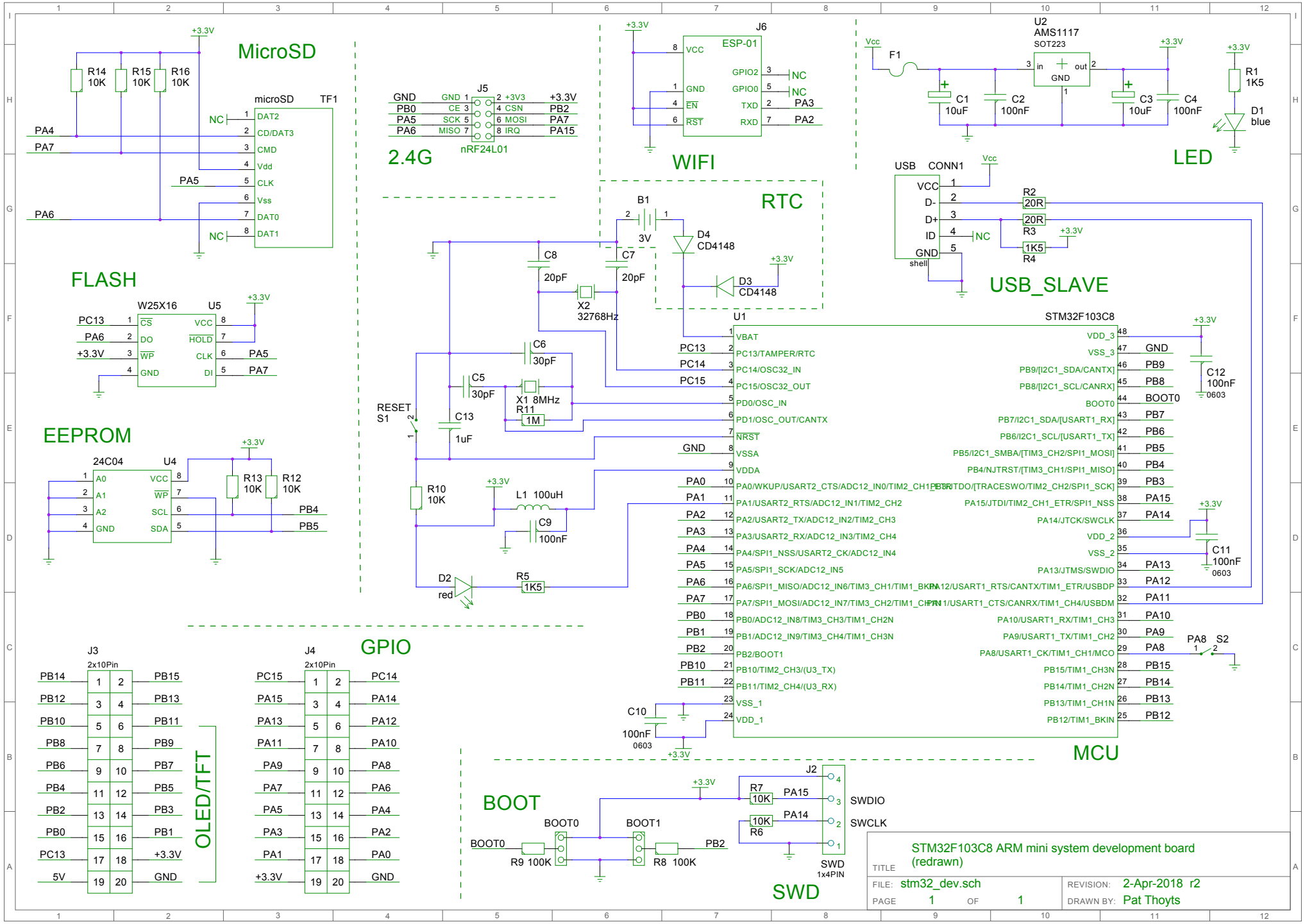
MicroSD
microSD TF1
R14 10K
R15 10K
R16 10K
+3.3V
PA4
PA7
PA5
PA6
NC
DAT2
CD/DAT3
CMD
Vdd
CLK
Vss
DAT0
DAT1
2.4G
J5
nRF24L01
GND
PB0
PA5
PA6
CE
SCK
MISO
+3.3V
CSN
MOSI
IRQ
PB2
PA7
PA15
WIFI
J6
ESP-01
VCC
GND
EN
RST
GPIO2
GPIO0
TXD
RXD
PA3
PA2
LED
U2
AMS1117
SOT223
in
out
F1
Vcc
C1 10uF
C2 100nF
C3 10uF
C4 100nF
R1 1K5
D1 blue
USB_SLAVE
USB CONN1
VCC
D-
D+
ID
GND
shell
R2 20R
R3 20R
R4 1K5
RTC
B1 3V
D4 CD4148
D3 CD4148
C8 20pF
C7 20pF
X2 32768Hz
FLASH
W25X16 U5
CS
DO
WP
HOLD
CLK
DI
PC13
PA6
PA5
PA7
EEPROM
24C04 U4
A0
A1
A2
SCL
SDA
R13 10K
R12 10K
PB4
PB5
RESET S1
C6 30pF
C5 30pF
X1 8MHz
R11 1M
C13 1uF
R10 10K
L1 100uH
C9 100nF
D2 red
R5 1K5
U1
STM32F103C8
VBAT
PC13/TAMPER/RTC
PC14/OSC32_IN
PC15/OSC32_OUT
PD0/OSC_IN
PD1/OSC_OUT/CANTX
NRST
VSSA
VDDA
PA0/WKUP/USART2_CTS/ADC12_IN0/TIM2_CH1_ETR
PA1/USART2_RTS/ADC12_IN1/TIM2_CH2
PA2/USART2_TX/ADC12_IN2/TIM2_CH3
PA3/USART2_RX/ADC12_IN3/TIM2_CH4
PA4/SPI1_NSS/USART2_CK/ADC12_IN4
PA5/SPI1_SCK/ADC12_IN5
PA6/SPI1_MISO/ADC12_IN6/TIM3_CH1/TIM1_BKIN
PA7/SPI1_MOSI/ADC12_IN7/TIM3_CH2/TIM1_CH1N
PB0/ADC12_IN8/TIM3_CH3/TIM1_CH2N
PB1/ADC12_IN9/TIM3_CH4/TIM1_CH3N
PB2/BOOT1
PB10/TIM2_CH3/(U3_TX)
PB11/TIM2_CH4/(U3_RX)
VSS_1
VDD_1
VDD_3
VSS_3
PB9/[I2C1_SDA/CANTX]
PB8/[I2C1_SCL/CANRX]
BOOT0
PB7/I2C1_SDA/[USART1_RX]
PB6/I2C1_SCL/[USART1_TX]
PB5/I2C1_SMBA/[TIM3_CH2/SPI1_MOSI]
PB4/NJTRST/[TIM3_CH1/SPI1_MISO]
PB3/JTDO/[TRACESWO/TIM2_CH2/SPI1_SCK]
PA15/JTDI/TIM2_CH1_ETR/SPI1_NSS
PA14/JTCK/SWCLK
VDD_2
VSS_2
PA13/JTMS/SWDIO
PA12/USART1_RTS/CANTX/TIM1_ETR/USBDP
PA11/USART1_CTS/CANRX/TIM1_CH4/USBDM
PA10/USART1_RX/TIM1_CH3
PA9/USART1_TX/TIM1_CH2
PA8/USART1_CK/TIM1_CH1/MCO
PB15/TIM1_CH3N
PB14/TIM1_CH2N
PB13/TIM1_CH1N
PB12/TIM1_BKIN
C12 100nF 0603
C11 100nF 0603
C10 100nF 0603
PA8 S2
MCU
GPIO
J3 2x10Pin
J4 2x10Pin
OLED/TFT
PB14 PB15
PB12 PB13
PB10 PB11
PB8 PB9
PB6 PB7
PB4 PB5
PB2 PB3
PB0 PB1
PC13 +3.3V
5V GND
PC15 PC14
PA15 PA14
PA13 PA12
PA11 PA10
PA9 PA8
PA7 PA6
PA5 PA4
PA3 PA2
PA1 PA0
+3.3V GND
BOOT
BOOT0
BOOT1
R9 100K
R8 100K
PB2
R7 10K
R6 10K
PA15
PA14
SWDIO
SWCLK
J2
SWD 1x4PIN
SWD
STM32F103C8 ARM mini system development board (redrawn)
TITLE
FILE: stm32_dev.sch
REVISION: 2-Apr-2018 r2
PAGE 1 OF 1
DRAWN BY: Pat Thoyts