Translated from Chinese (Simplified) to English - www.onlinedoctranslator.com

MSKSEMI 美森科
SEMICONDUCTOR

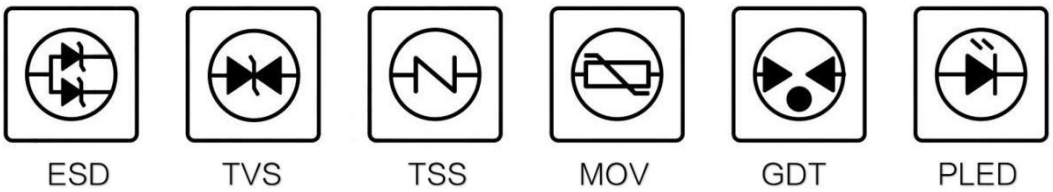

Z7889-MS

Product Overview

The RZ7889-MS is a DC bidirectional motor drive circuit suitable for driving motors in toys, automatic valves, and electromagnetic door locks. It has two logic input terminals for controlling the motor's forward, reverse, and braking directions. This circuit features excellent anti-interference capabilities, low standby current, and low output resistance. It also incorporates a built-in diode to discharge reverse inrush current from inductive loads.

The RZ7889-MS is packaged in SOP-8 form, complies with RoHS standards, and has a 100% lead-free lead frame.

feature

- Drive a brushed DC motor
- Minimal standby current, less than 1uA
- Low RDS(ON) resistance
- Maximum continuous output current 5.0A
- Operating voltage range: 3.0V-18V
- It has an emergency stop function.
- Overheat protection function
- Overcurrent and short-circuit protection functions
- Package: SOP-8

application

- electronic lock
- Toy
- Wireless charging
- robot

Packaging and order information

Product Number	Packaging		Tube markings	Minimum Packaging (PCS)
RZ7889-MS	SOP-8	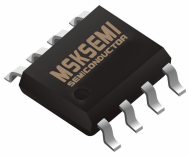	MSKSEMI 7889-MS	4000

Foot position definition

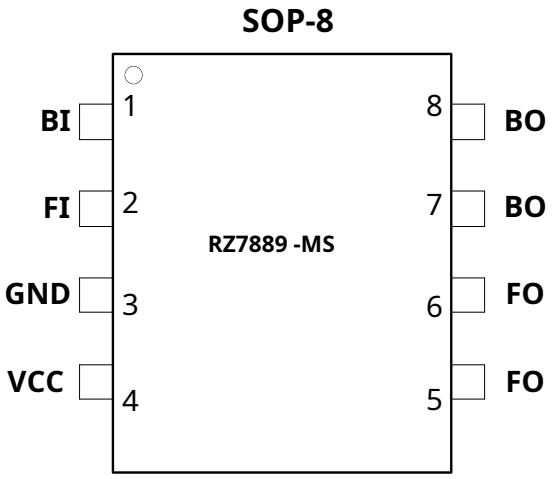

picture1.Top view

Pin Name	Input/Output	describe	Pin number
BI	enter	Back input	1
FI	enter	Forward Input	2
GND	power supply	land	3
VCC	power supply	Power supply	4
FO	Output	Forward Output	5,6
BO	Output	Back Output	7,8

Absolute maximum rating

Maximum operating temperature range (unless otherwise specified) (1)(2)

parameter	symbol	numerical values	unit
power supply voltage	VCC	20	V
Output continuous current	Iout	9.0	A
Operating temperature	Top	- 25~+85	℃
Storage temperature	Tstg	- 55~+150	℃

(1Exceeding the absolute maximum ratings may cause permanent damage to the device. These are only ratings for emphasis. Chip functionality is not described in any other cases exceeding the recommended conditions. Prolonged exposure to absolute maximum ratings may affect chip reliability.

(2All voltage values correspond to the grounding terminal.

(3) based on40mm2single-sidedPCB,FR4 PCB(1 oz.)

Recommended working conditions (T_A=25℃)

parameter	symbol	Minimum	typical	maximum	unit
Operating voltage range	VCC	3	-	18	V
Input signal voltageINH and INL	VINH	- 0.3	-	18	V
Output continuous current	V_{OUT_X}	0	-	5.0*	A
Logic input frequency	F_{IN_X}	-	-	30	KHz

* based on40mm2single-sidedPCB,FR4 PCB(1 oz.)

Electrical characteristic parameters

Unless otherwise specifiedT_A=25℃

parameter	symbol	condition	Minimum	typical	maximum	unit
Power parameters						
Operating voltage	Vopr		3.0	-	18	V
standby current	I_{CCST}	VCC=12V, FI=BI=0V, noload	-	-	1	uA
Static current	I_{CC}	VCC=12V,FI=BI=5V or FI=5V & BI=0V or FI=0V & BI=5V, no load	-	1.0	-	mA
PWMCurrent	I_{CCPWM1}	VCC=12V, FI=5V, BI=50KHz, no load	-	2.5	-	mA
Low voltage protection	UVLO	VCC rising	1.9	2.2	2.8	V
Logical input parameters						
Input high level	V_{INH}		2.2	-	-	V
Input low level	V_{INL}		-	-	0.7	V
Current when input is high	I_{INH}	VCC = 12V, VIN = 5V	-	110	200	uA
Current when input is low	I_{INL}	VCC = 12V, VIN = 0V	-	-	1	uA
H-bridge FETsparameter						
	$R_{ds(on)}$	I_{LOAD}=1A, HS+LS	-	58	-	mΩ
	$R_{ds(on)}$	I_{LOAD}=3A, HS+LS	-	71	-	mΩ
Overheat protection parameters						
Overheat protection temperature	T_{OTP}		-	160	-	℃
Restore operating temperature	TSD_R		-	130	-	℃
Overcurrent protection parameters						
Overcurrent protection current	I_{OCP}		-	12	-	A

Copyright© Msksemi Incorporated

block diagram

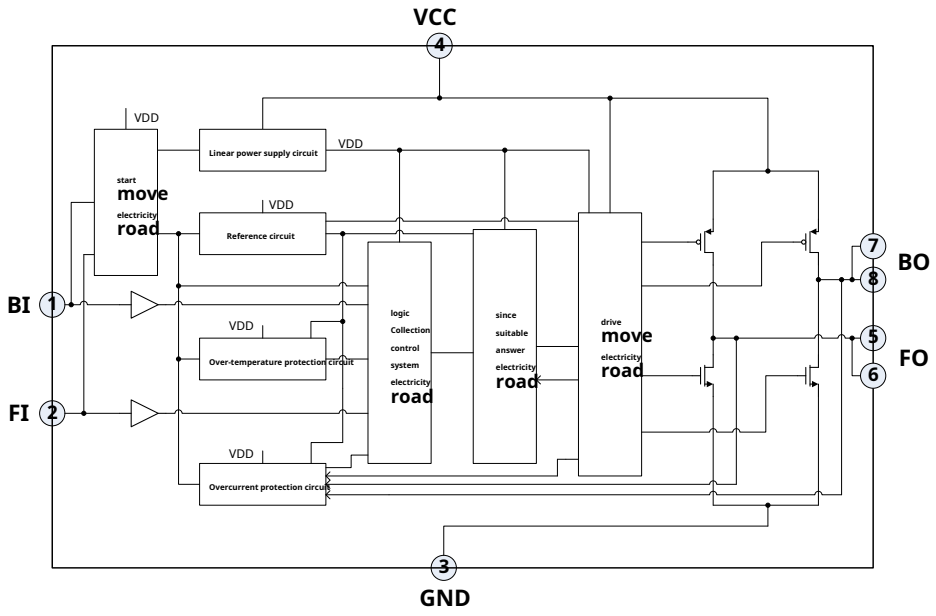

picture2.Main module block diagram

Function Description

Output truth table

FI	BI	FO	BO	state
H	L	H	L	go ahead
L	H	L	H	Back
H	H	L	L	brake
L	L	Open	Open	stop

Output timing diagram

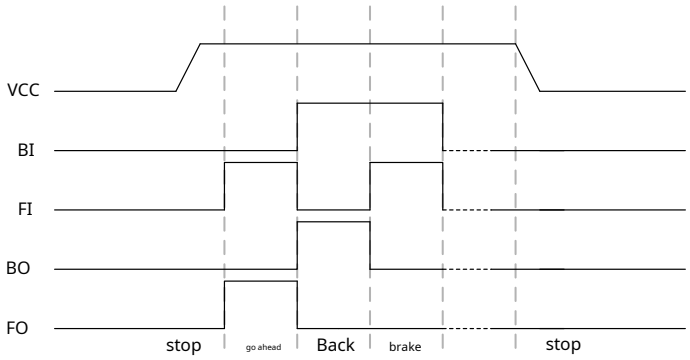

picture3.Output timing diagram

Application circuits

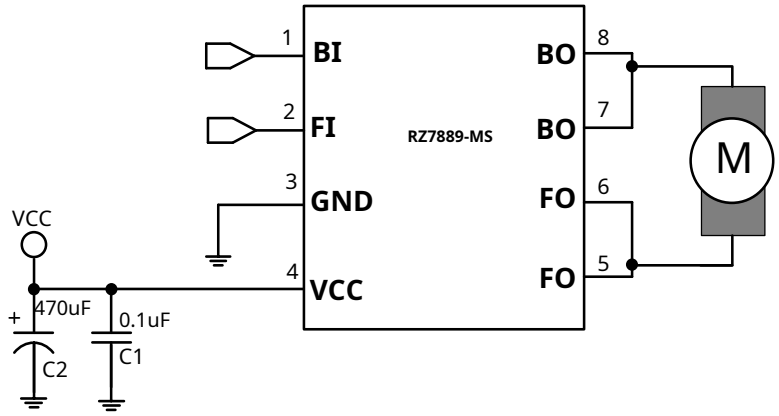

picture4.Application Schematic Diagram

Application Circuit Description

The mounting components on the application circuit are described below:

C1,C2forVCCInput capacitor

1Absorbs the energy released by the motor to the power supply, stabilizes the power supply voltage, and avoidsICIt is directly broken down due to excessively high surge voltage, and also has a filtering function.

2At the moment the motor starts, it can release current to help the motor start quickly.

3)VCCInput capacitorC2The choice should be based onVCCThe capacitor should be selected based on the voltage stability and the magnitude of the motor load current.VCCvoltage waveform

If the current is large or the motor load current is large, a larger capacitor value must be selected.

4)existPCBConfigurationC1,C2Capacitors need to be as close as possibleVCC.

BI,FIIt is recommended to leave the input terminal floating to avoid damage at high temperatures.ICOntologyP/NA slight leakage current exists between the contacts. This leakage current flowing through the pull-down resistor causes the input potential of the floating pin to change from low to high, resulting in an incorrect signal output by the circuit.

Working mode description

Basic working mode

aForward mode

Forward mode definition:BI=L,FI=H,at this timeBO=L,FO=H

bBack mode

Back mode definition:BI=H,FI=L,at this timeBO=H,FO=L

cBraking mode

Braking mode definition:BI=H,FI=H,at this timeBO=L,FO=L

dStop mode

Stop mode definition:BI=L,FI=L,at this timeBO=Open,FO = Open

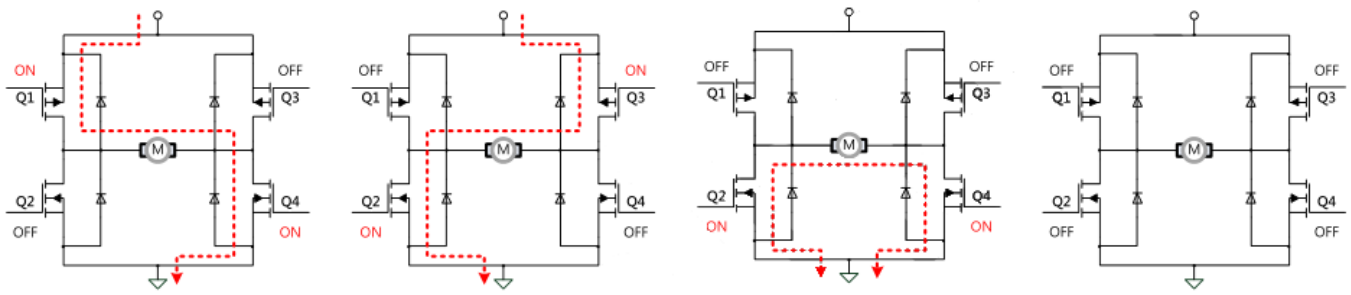

Forward mode　　Back mode　　Braking mode　　Stop mode

Protection Mechanism Explanation

1Use thisICAt that time,ICTemperature exceeded150℃ (typical value), this is a built-in design.ICThe overheat protection circuit will forcibly shut down some drivers. MOSTransistors ensure the safety of customer products. WhenICTemperature dropped120℃ (typical value) is,ICIt will quickly and automatically resume operation.

Power-on sequence

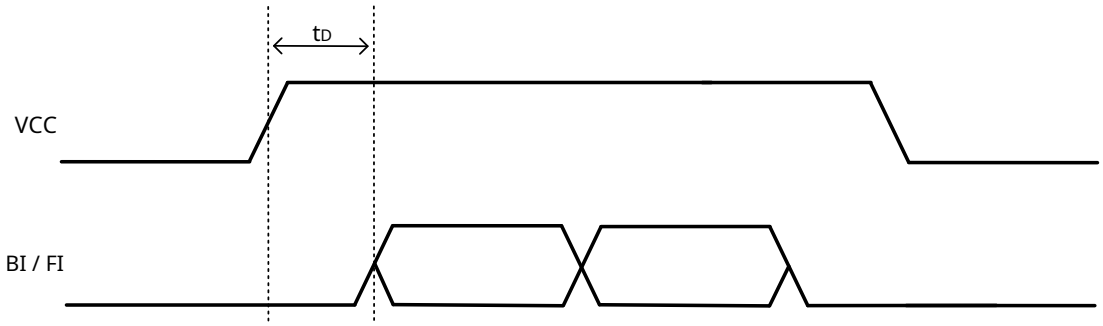

picture5.Power-on timing diagram

As shown in the figure5,existVCCBefore powering on,BI / FIIt must remain at a low level or in a high-impedance state with no input; it cannot be used with...BI / FIInput high level untilVCC Power on and delay3ms (t_D)Only after that can one...BI / FIPerform logical control;

Input control timing

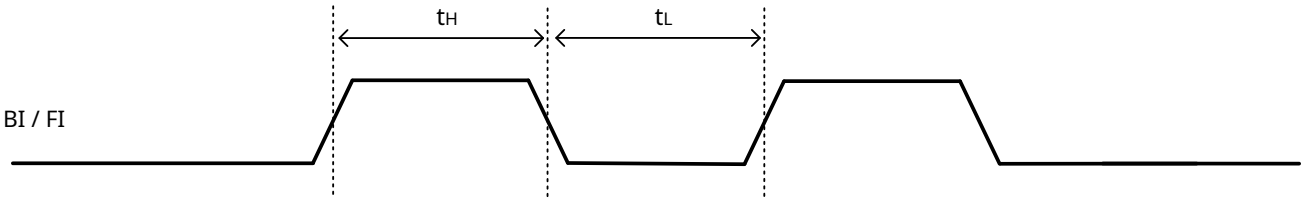

picture6.Power-on timing diagram

As shown in the figure6Input control pinBI / FIThe frequency cannot exceed30kHz, t_H+ t_L> 33usAt the same time, it should be noted that$t_H$andt_LNone can be less than100ns

SOP-8

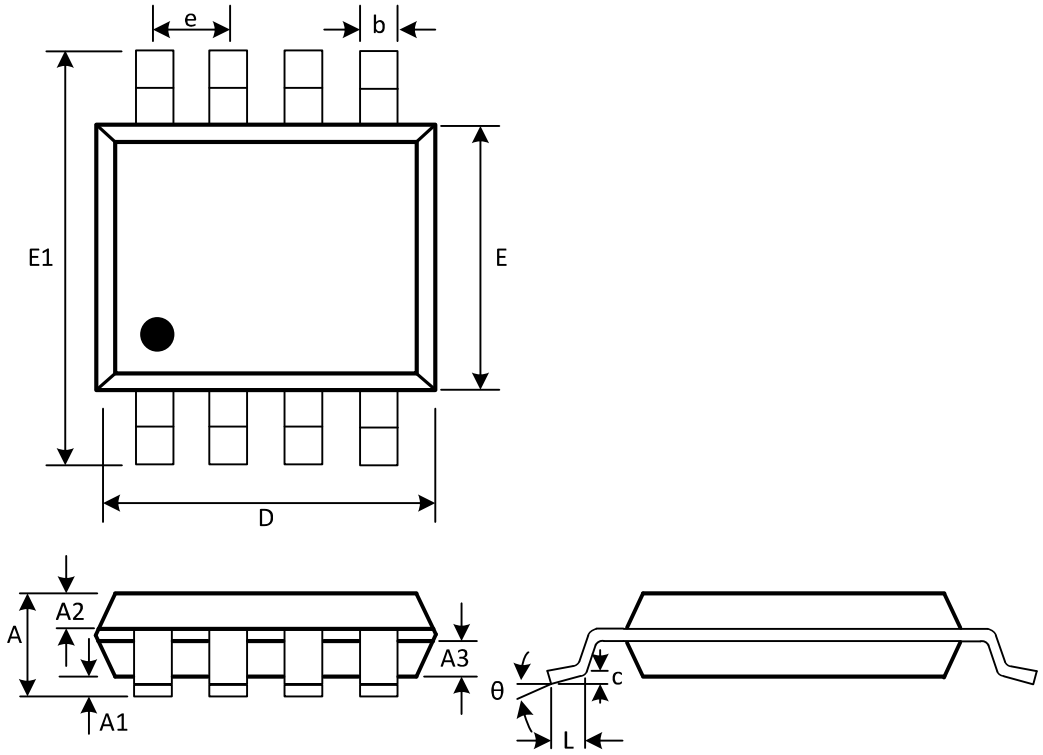

(Unit: mm)

Symbol	Min	Max
A	1.300	1.600
A1	0.050	0.200
A2	0.550	0.650
A3	0.550	0.650
b	0.356	0.456
c	0.203	0.233
D	4.800	5.000
e	1.270(BSC)	
E	3.800	4.000
E1	5.800	6.200
L	0.400	0.800
θ	0°	8°

Copyright© Msksemi Incorporated

Attention

■ Any and all MSKSEMI Semiconductor products described or contained herein do not have specifications that can handle applications that require extremely high levels of reliability, such as life-support systems, aircraft's control systems, or other applications whose failure can be reasonably expected to result in serious physical and/or material damage. Consult with your MSKSEMI Semiconductor representative nearest you before using any MSKSEMI Semiconductor products described or contained herein in such applications.

■ MSKSEMI Semiconductor assumes no responsibility for equipment failures that result from using products at values that exceed, even momentarily, rated values (such as maximum ratings, operating condition ranges, or other parameters) listed in products specifications of any andall MSKSEMI Semiconductor products described or contained herein.

■ Specifications of any and all MSKSEMI Semiconductor products described or contained herein stipulate the performance, characteristics, and functions of the described products in the independent state, and are not guarantees of the performance, characteristics, and functions of the described products as mounted in the customer's products or equipment. To verify symptoms and states that cannot be evaluated in an independent device, the customer should always evaluate and test devices mounted in the customer's products or equipment.

■ MSKSEMI Semiconductor. strives to supply high-quality high-reliability products. However, any and all semiconductor products fail with someprobability. It is possiblethat these probabilistic failures could give rise to accidents or events that could endanger human lives, that could give rise to smoke or fire, or that could cause damage to other property. When designing equipment, adopt safety measures so that these kinds of accidents or events cannot occur. Such measures include but are not limited to protective circuits and error prevention circuits for safedesign, redundant design, and structural design.

■ In the event that any or all MSKSEMI Semiconductor products(including technical data, services) described or contained herein are controlled under any of applicable local export control laws and regulations, such products must not be exported without obtaining the export license from the authorities concerned in accordance with the above law.

■ No part of this publication may be reproduced or transmitted in any form or by any means, electronic or mechanical, including photocopying and recording, or any information storage or retrieval system, or otherwise, without the prior written permission of MSKSEMI Semiconductor.

■ Information (including circuit diagrams and circuit parameters) herein is for example only; it is not guaranteed for volume production. MSKSEMI Semiconductor believes information herein is accurate and reliable, but no guarantees are made or implied regarding its use or any infringements of intellectual property rights or other rights of third parties.

■ Any and all information described or contained herein are subject to change without notice due to product/technology improvement, etc. Whendesigning equipment, referto the "Delivery Specification" for the MSKSEMI Semiconductor product that you intend to use.