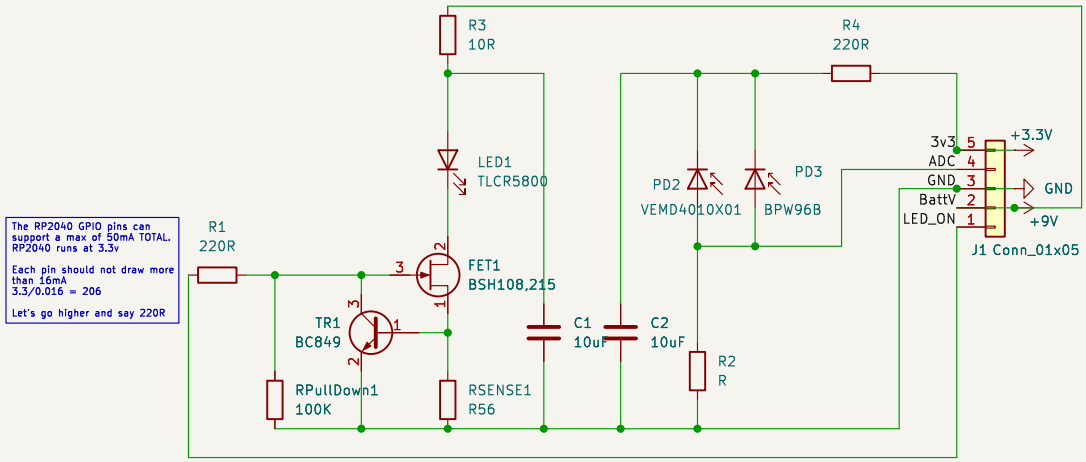


The RP2040 GPIO pins can support a max of 50mA TOTAL. RP2040 runs at 3.3v

Each pin should not draw more than 16mA
3.3/0.016 = 206

Let's go higher and say 220R

**Design of a simple generic sensor board for SMD or THT Photo Diodes**

Sheet: /
File: MouseSMDSensorBoard.kicad_sch

***Title: Mouse SMD Sensor Board***

| | | |
|---|---|---|
| Size: A4 | Date: 2024-12-19 | **Rev: 1.0** |
| KiCad E.D.A. 8.0.8 | | Id: 1/1 |