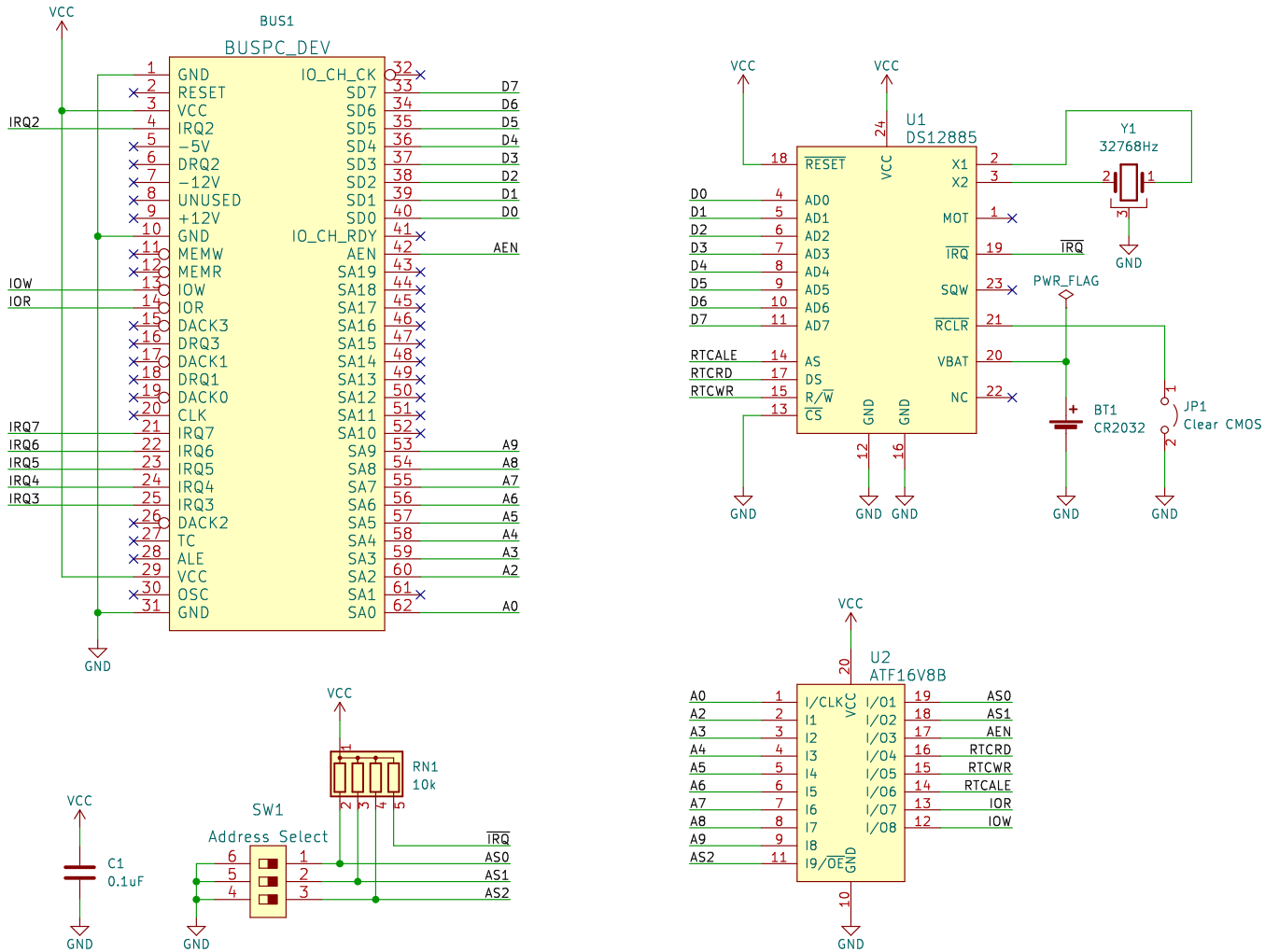

Sergey Kiselev

Sheet: /

File: RTC8088.kicad_sch

Title: RTC8088 – Real Time Clock for PC/XT

Size: A4	Date: 2024-04-26	**Rev: 3.0**
KiCad E.D.A. kicad (6.0.2)		Id: 1/1