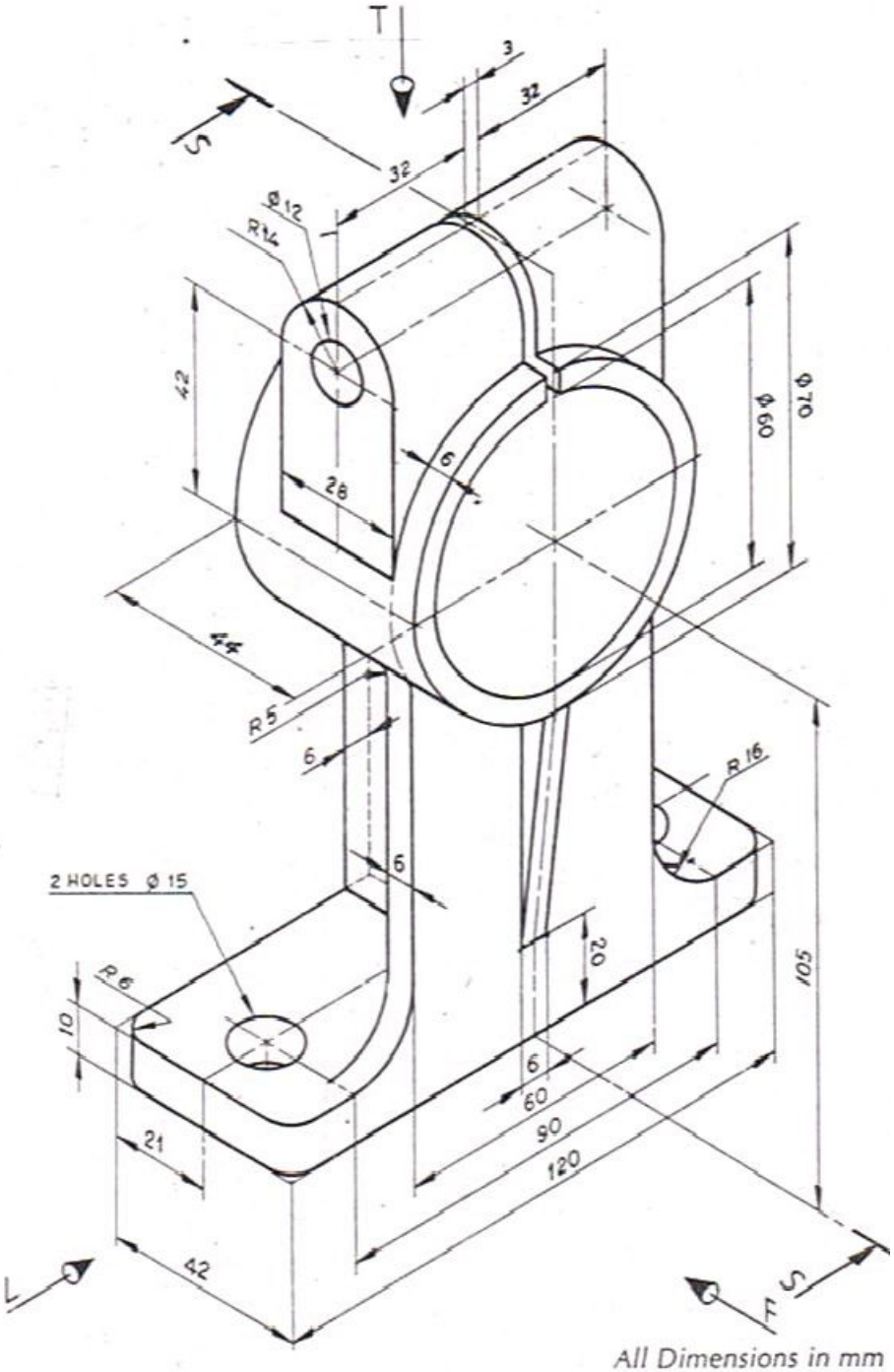

All Dimensions in mm