NEMA WD 6

Wiring Devices—Dimensional Specifications

Approved as an American National Standard
ANSI Approval Date: August 29, 2002

NEMA Standards Publication ANSI/NEMA WD 6-2002

Wiring Devices—Dimensional Specifications

Published by

National Electrical Manufacturers Association
1300 North 17th Street
Rosslyn, Virginia 22209

www.nema.org

© Copyright 2002 by the National Electrical Manufacturers Association. All rights including translation into other languages, reserved under the Universal Copyright Convention, the Berne Convention for the Protection of Literary and Artistic Works, and the International and Pan American Copyright Conventions.

NOTICE AND DISCLAIMER

The information in this publication was considered technically sound by the consensus of persons engaged in the development and approval of the document at the time it was developed. Consensus does not necessarily mean that there is unanimous agreement among every person participating in the development of this document.

The National Electrical Manufacturers Association (NEMA) standards and guideline publications, of which the document contained herein is one, are developed through a voluntary consensus standards development process. This process brings together volunteers and/or seeks out the views of persons who have an interest in the topic covered by this publication. While NEMA administers the process and establishes rules to promote fairness in the development of consensus, it does not write the document and it does not independently test, evaluate, or verify the accuracy or completeness of any information or the soundness of any judgments contained in its standards and guideline publications.

NEMA disclaims liability for any personal injury, property, or other damages of any nature whatsoever, whether special, indirect, consequential, or compensatory, directly or indirectly resulting from the publication, use of, application, or reliance on this document. NEMA disclaims and makes no guaranty or warranty, expressed or implied, as to the accuracy or completeness of any information published herein, and disclaims and makes no warranty that the information in this document will fulfill any of your particular purposes or needs. NEMA does not undertake to guarantee the performance of any individual manufacturer or seller's products or services by virtue of this standard or guide.

In publishing and making this document available, NEMA is not undertaking to render professional or other services for or on behalf of any person or entity, nor is NEMA undertaking to perform any duty owed by any person or entity to someone else. Anyone using this document should rely on his or her own independent judgment or, as appropriate, seek the advice of a competent professional in determining the exercise of reasonable care in any given circumstances. Information and other standards on the topic covered by this publication may be available from other sources, which the user may wish to consult for additional views or information not covered by this publication.

NEMA has no power, nor does it undertake to police or enforce compliance with the contents of this document. NEMA does not certify, test, or inspect products, designs, or installations for safety or health purposes. Any certification or other statement of compliance with any health or safety–related information in this document shall not be attributable to NEMA and is solely the responsibility of the certifier or maker of the statement.

CONTENTS

Page

Foreword….. iv
Scope…….....…..iv
Introduction…..... iv
Wallplate Dimensions….....1
Yoke Dimensions of Receptacles and Switches for Box Mounting…..... 8
Yoke Dimensions for 2-Gang Mounting Receptacles….....9
Dimensions for Duplex Devices….. 10
Dimensions for Rectangular Face Devices….. 11
Dimensions for Rectangular Face Devices with Protruding Actuators…..... 12
Dimensions for Round and Rectangular Face Single Devices….....13
Dimensions for Interchangeable Type: Single, Duplex, and Triplex Devices…..... 14
Wiring Devices Maximum Envelope Dimensions….....15
Dimensions for Flanged Inlets and Connector Bodies….. 16
Flat Blade Hole Location….. 17
Configurations for Non-Locking Plugs and Receptacles….....18
Configurations for Locking Plugs and Receptacles….....64
Configurations for Specific Purpose Plugs and Receptacles….. 131
Chart for Specific Purpose Plugs and Receptacles….....141
Chart for Non-Locking Plugs and Receptacles….. 142
Chart for Locking Plugs and Receptacles….. 143

Foreword

The purpose of these Standards is to present the dimensional requirements of wiring devices in order to assist the user in selecting and obtaining the proper product for a particular need and to minimize the possibility of unsafe interchangeability between configurations.

In the preparation of this Standards Publication, input of users and other interested parties has been sought and evaluated. User input will be formally sought by the canvas procedures of the American National Standards Institute.

The Communications Department has worked closely with the Engineering Department and with individual NEMA Subdivisions in the drafting of this manual and acknowledges the need for periodic review and updating. Proposed or recommended revisions should be submitted to:

Vice President, Communications Department
National Electrical Manufacturers Association
1300 North 17th Street
Rosslyn, Virginia 22209

Publication ANSI/NEMA WD 6-2002 revises and supersedes NEMA Standards Publication WD 6-1997.

Scope

These Standards cover dimensional requirements for plugs and receptacles rated up to 60 Ampere and 600 Volts. They also include dimensions for wall plates.

These Standards do not cover performance or other requirements since these are included in NEMA Standards Publication WD 1, *General Requirements for Wiring Devices*.

Introduction

Throughout this publication the following shall apply:

1. All dimensions are in inches, unless otherwise specified.
2. Decimal dimensions without tolerances shall be subject to a plus or minus 0.005-inch tolerance.
3. Angular dimensions without tolerances shall be subject to a plus or minus 1 degree tolerance.
4. “G” denotes equipment ground.
5. “W” denotes system ground.
6. Leading edges of plug blades shall be free of burrs and sharp edges.
7. All slots and slot tolerances are symmetrically located about centerlines.
8. Female contacts associated with plug blades that are 0.125 minimum longer than other blades are engaged prior to the other female contacts.
9. Configurations utilized on alternating current systems are limited to 50 or 60 Hertz, unless otherwise specified.
10. Dimensions shown in these standards are for the purpose of interchangeability, and do not preclude other designs.
11. The electrical ratings of the configurations in these standards are AC and DC, unless specifically stated ‘AC’ or ‘DC.

DIMENSIONAL SPECIFICATIONS FOR WALLPLATES

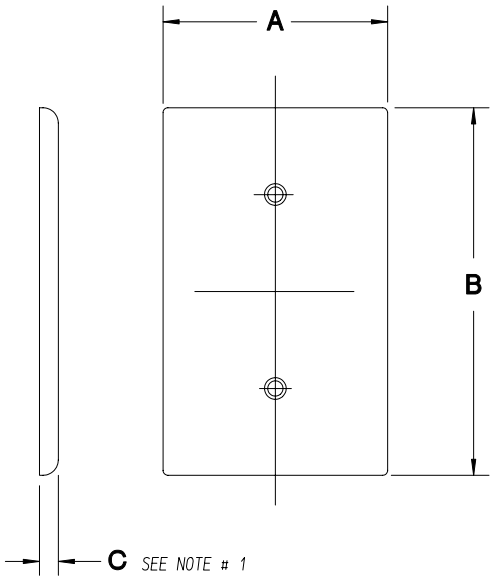

SINGLE-GANG WALLPLATE
OVERALL DIMENSIONS

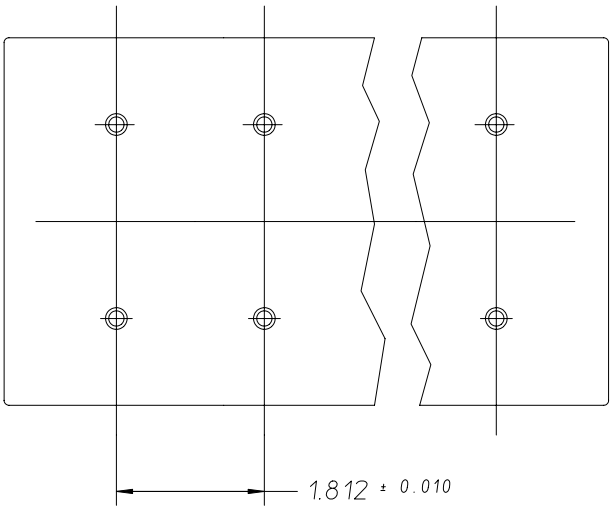

MULTIGANG WALLPLATE HORIZONTAL HOLE SPACING.
FOR VERTICAL HOLE SPACING SEE PAGE 3.

REFERENCE	MATERIAL	STANDARD DIMENSIONS	
		MIN	MAX
A	ALL	2.740	—
B	ALL	4.490	—

NOTES:

1- THE DEPTH IS DEFINED IN ACCORDANCE TO THE APPLICABLE INSTALLATION CODE BY THE AUTHORITY HAVING JURISDICTION. DECORATIVE CONTOURS SHOULD NOT PRECLUDE THE FLUSH SEATING OF A PLUG INTO A RECEPTACLE.

2- PLATE MOUNTING HOLES TO BE COUNTER-SUNK FOR # 6-32 UNC, OVAL HEAD MACHINE SCREW.

3- RIBS ARE OPTIONAL ON NON-METALLIC PLATES. HEIGHT, WIDTH, AND LOCATION OF RIBS SHALL CLEAR DEVICE FOR WHICH THE PLATE IS DESIGNED OR INTENDED FOR USE.

© Copyright 2002 by the National Electrical Manufacturers Association.

DIMENSIONAL SPECIFICATIONS FOR WALLPLATES USED ON 347 V SWITCH DEVICES

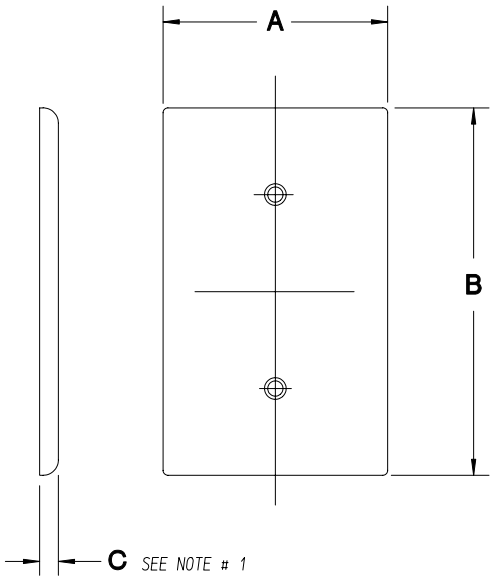

SINGLE-GANG WALLPLATE
OVERALL DIMENSIONS

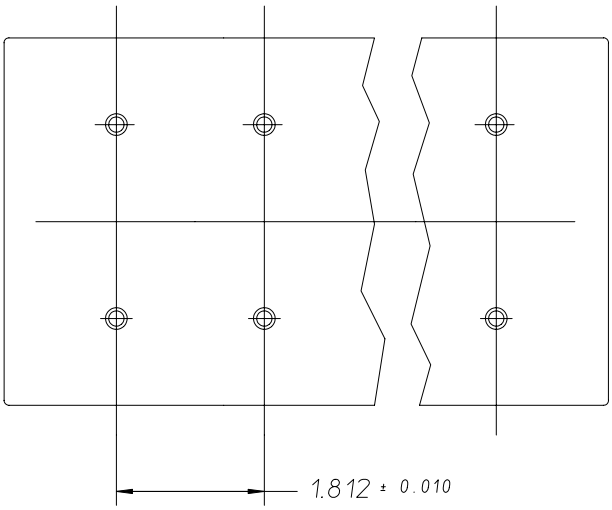

MULTIGANG WALLPLATE HORIZONTAL HOLE SPACING.
FOR VERTICAL HOLE SPACING SEE PAGE 3.

REFERENCE	MATERIAL	STANDARD DIMENSIONS	
		MIN	MAX
A	ALL	3.120	—
B	ALL	4.870	—

NOTES:

1- THE DEPTH IS DEFINED IN ACCORDANCE TO THE APPLICABLE INSTALLATION CODE BY THE AUTHORITY HAVING JURISDICTION. DECORATIVE CONTOURS SHOULD NOT PRECLUDE THE FLUSH SEATING OF A PLUG INTO A RECEPTACLE.

2- PLATE MOUNTING HOLES TO BE COUNTER-SUNK FOR # 6-32 UNC, OVAL HEAD MACHINE SCREW.

3- RIBS ARE OPTIONAL ON NON-METALLIC PLATES. HEIGHT, WIDTH, AND LOCATION OF RIBS SHALL CLEAR DEVICE FOR WHICH THE PLATE IS DESIGNED OR INTENDED FOR USE.

© Copyright 2002 by the National Electrical Manufacturers Association.

MOUNTING AND CUT–OUT DIMENSIONS

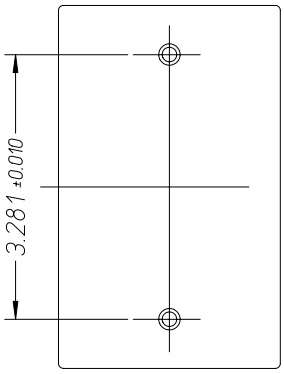

BOX MOUNT BLANK PLATE
(SEE NOTE # 3)

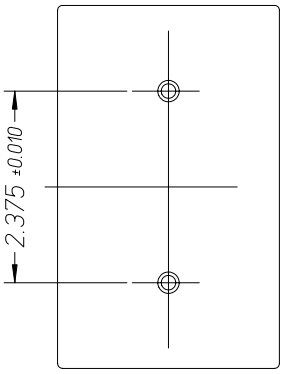

YOKE MOUNT BLANK PLATE
(SEE NOTE # 3)

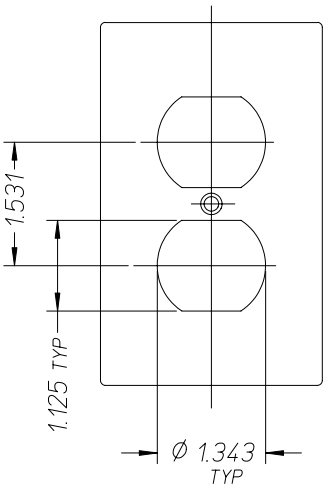

DUPLEX DEVICE

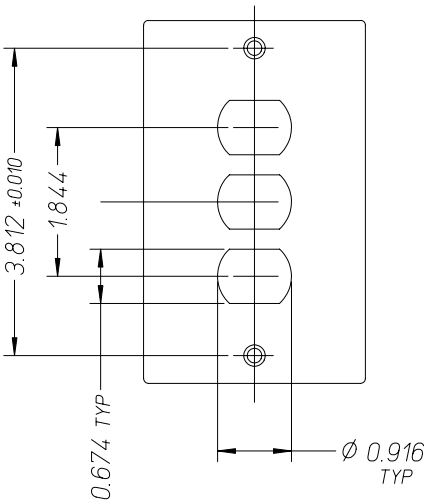

INTERCHANGEABLE
DEVICE

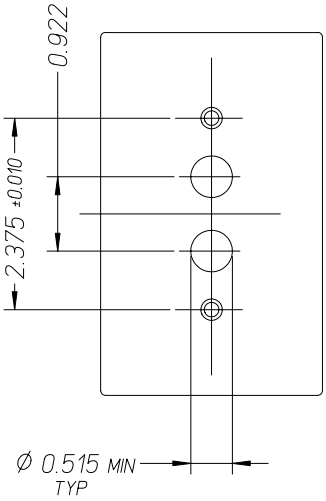

TWO BUTTON
PUSH SWITCH

NOTES:

1– PLATE MOUNTING HOLES TO BE COUNTER–SUNK FOR # 6–32 UNC, OVAL HEAD MACHINE SCREW.

2– RIBS ARE OPTIONAL ON NON–METALLIC PLATES. HEIGHT, WIDTH, AND LOCATION OF RIBS SHALL CLEAR DEVICE FOR WHICH THE PLATE IS DESIGNED OR INTENDED FOR USE.

3– BLANK PLATES MAY BE PROVIDED WITH KNOCK–OUTS.

© Copyright 2002 by the National Electrical Manufacturers Association.

WALLPLATE DIMENSIONS FOR ROUND FACE DEVICES

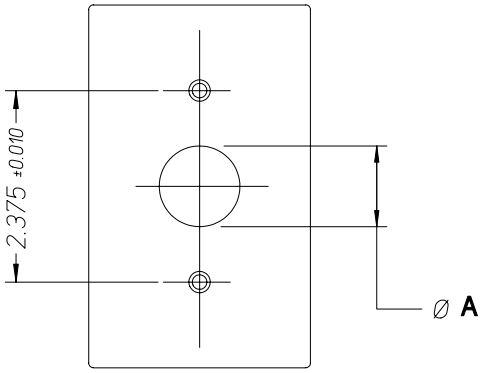

NOMINAL DIAMETER	DEVICE FACE DIAMETER		WALLPLATE OPENING (∅ A)	
	MIN	MAX	MIN	MAX
1	0.968	1.000	1.009	1.025
1 1/8	1.093	1.125	1.134	1.150
1 1/4	1.205	1.235	1.245	1.263
1 3/8	1.360	1.390	1.396	1.414
1 9/16	1.550	1.580	1.586	1.604
1 5/8	1.610	1.640	1.646	1.664
1 11/16	1.675	1.705	1.711	1.729
2 1/8	2.093	2.125	2.140	2.156
2 1/4	2.218	2.250	2.265 *	2.281 *
2 7/16	2.405	2.437	2.452 *	2.468 *

NOTES:

1- PLATE MOUNTING HOLES TO BE COUNTER-SUNK FOR # 6-32 UNC, OVAL HEAD MACHINE SCREW.

2- RIBS ARE OPTIONAL ON NON-METALLIC PLATES. HEIGHT, WIDTH, AND LOCATION OF RIBS SHALL CLEAR DEVICE FOR WHICH THE PLATE IS DESIGNED OR INTENDED FOR USE.

3- DIMENSIONS WITH ASTERISK (*) APPLY TO MULTIGANG PLATES ONLY.

© Copyright 2002 by the National Electrical Manufacturers Association.

WALLPLATE DIMENSIONS FOR RECTANGULAR FACE DEVICES

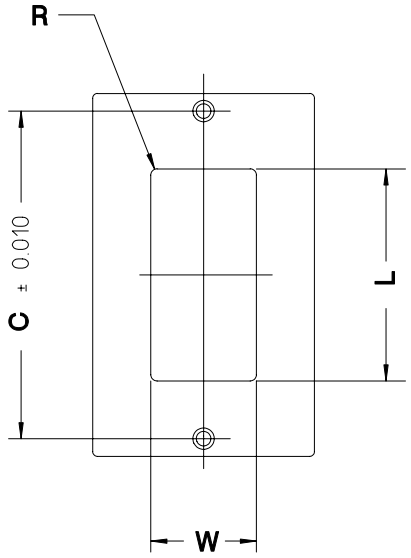

W MIN	*L MIN*	*R*	*C*	*APPLICATION* (DEVICE FACE)
1.310	2.630	0.079	4.062	1.300 MAX W x 2.620 MAX L (347 V SWITCH)
1.310	2.630	0.094	3.812	1.300 MAX W x 2.620 MAX L

NOTES:

1– PLATE MOUNTING HOLES TO BE COUNTER-SUNK FOR # 6-32 UNC, OVAL HEAD MACHINE SCREW.

2– RIBS ARE OPTIONAL ON NON-METALLIC PLATES. HEIGHT, WIDTH, AND LOCATION OF RIBS SHALL CLEAR DEVICE FOR WHICH THE PLATE IS DESIGNED OR INTENDED FOR USE.

© Copyright 2002 by the National Electrical Manufacturers Association.

WALLPLATE DIMENSIONS FOR TELEPHONE DEVICES

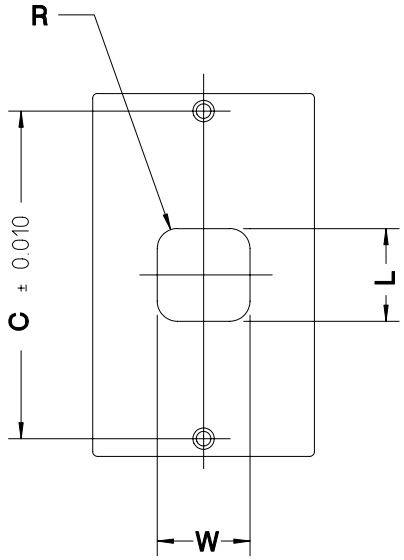

W MIN	*L MIN*	*R*	*C*	*APPLICATION* (DEVICE FACE)
1.150	1.150	0.250	2.375	1.140 MAX W x 1.140 MAX L

NOTES:

1– PLATE MOUNTING HOLES TO BE COUNTER–SUNK FOR # 6–32 UNC, OVAL HEAD MACHINE SCREW.

2– RIBS ARE OPTIONAL ON NON–METALLIC PLATES. HEIGHT, WIDTH, AND LOCATION OF RIBS SHALL CLEAR DEVICE FOR WHICH THE PLATE IS DESIGNED OR INTENDED FOR USE.

© Copyright 2002 by the National Electrical Manufacturers Association.

WALLPLATE DIMENSIONS FOR TOGGLE SWITCH DEVICES

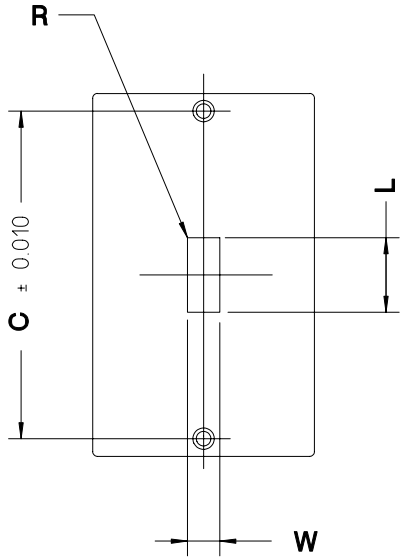

W MIN	*L MIN*	*R*	*C*	*APPLICATION*
0.401	0.925	0.000	2.375	120 V TO 600 V

NOTES:

1– PLATE MOUNTING HOLES TO BE COUNTER-SUNK FOR # 6-32 UNC, OVAL HEAD MACHINE SCREW.

2– RIBS ARE OPTIONAL ON NON-METALLIC PLATES. HEIGHT, WIDTH, AND LOCATION OF RIBS SHALL CLEAR DEVICE FOR WHICH THE PLATE IS DESIGNED OR INTENDED FOR USE.

© Copyright 2002 by the National Electrical Manufacturers Association.

YOKE DIMENSIONS OF RECEPTACLES AND SWITCHES FOR BOX MOUNTING

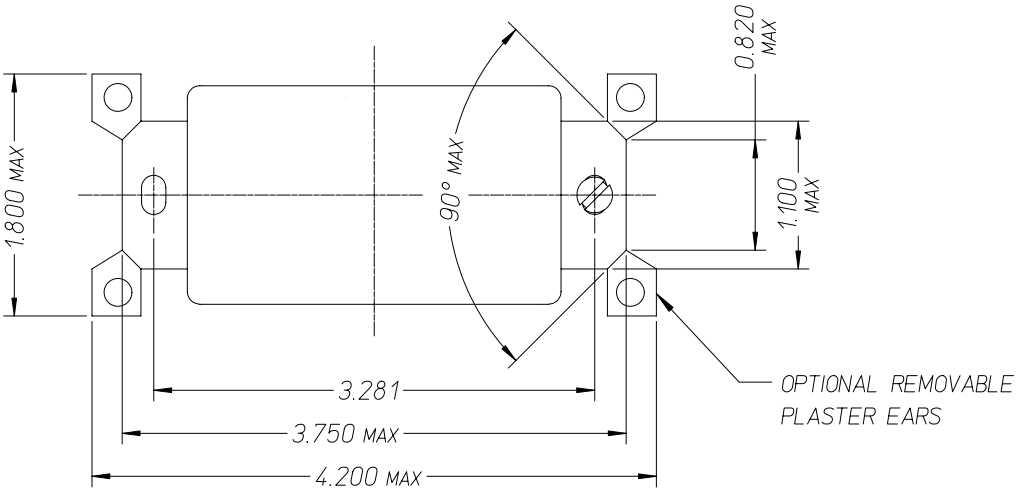

ALTERNATE YOKE CONSTRUCTION

OTHER DIMENSIONS SAME AS ABOVE

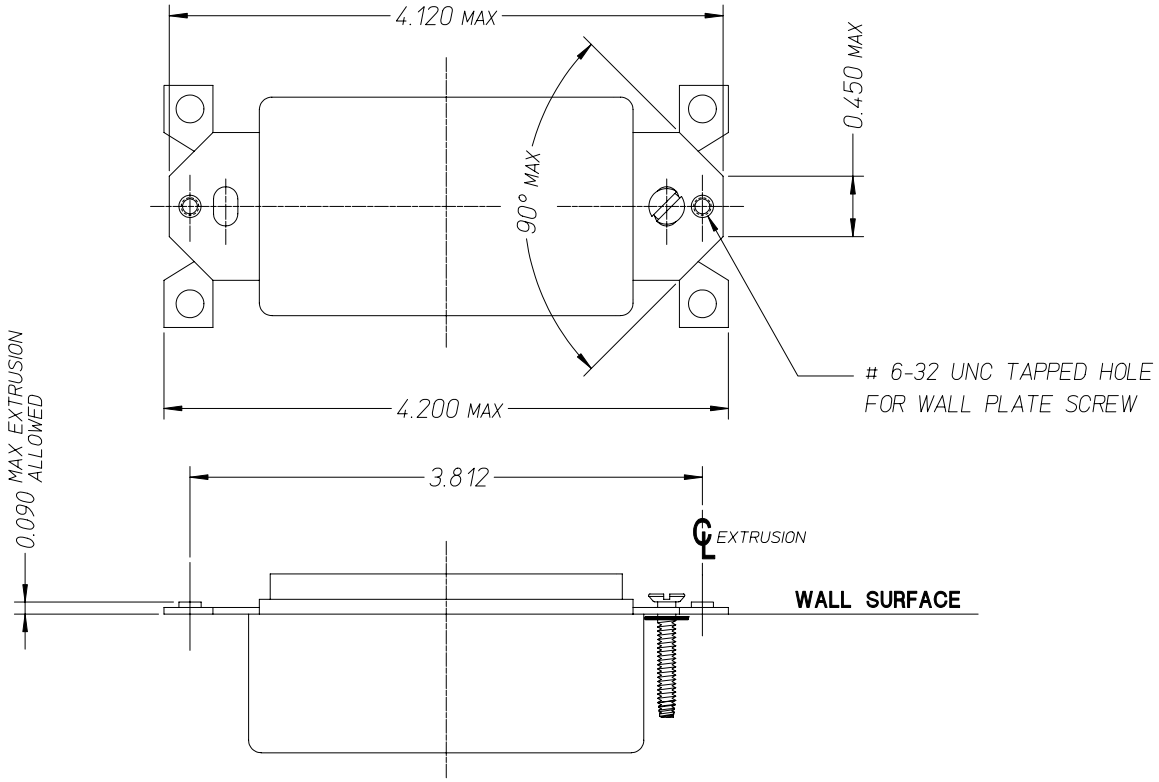

© Copyright 2002 by the National Electrical Manufacturers Association.

YOKE DIMENSIONS FOR 2 GANG RECEPTACLE MOUNTING "OFF–CENTER FACE" TYPE

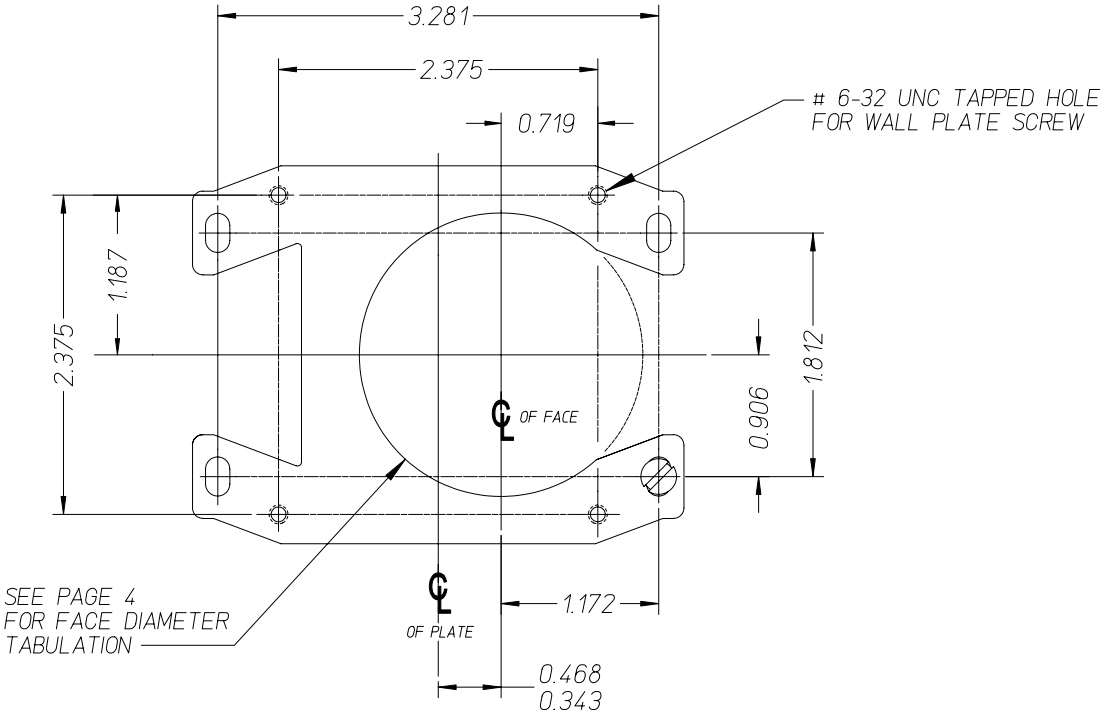

YOKE DIMENSIONS FOR 2 GANG RECEPTACLE MOUNTING "ON–CENTER FACE" TYPE

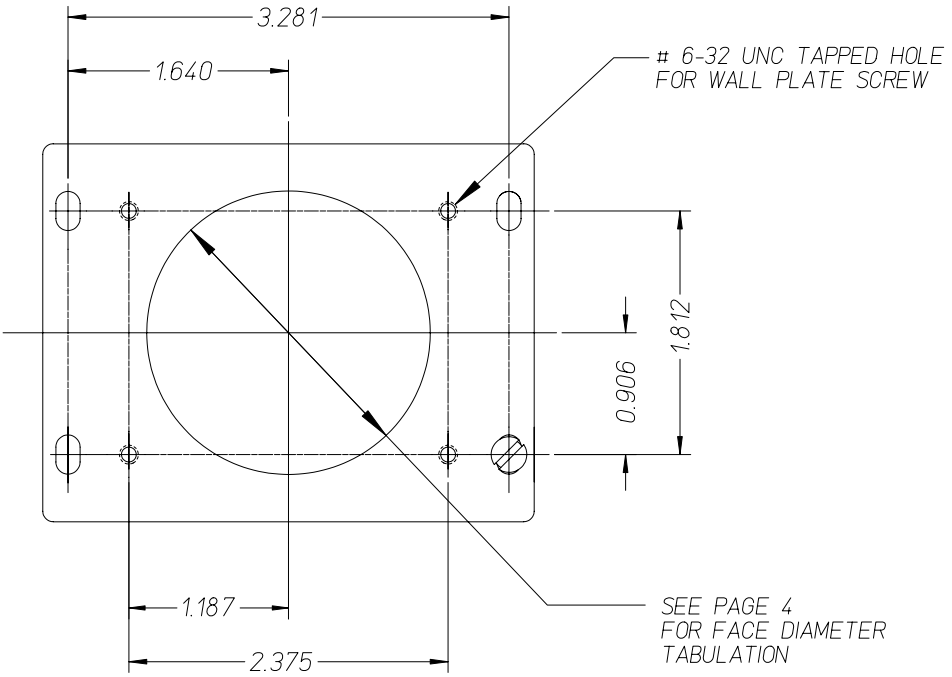

© Copyright 2002 by the National Electrical Manufacturers Association.

DIMENSIONS FOR FLUSH MOUNT DUPLEX DEVICES RECEPTACLES, COMBINATION SWITCHES, ETC...

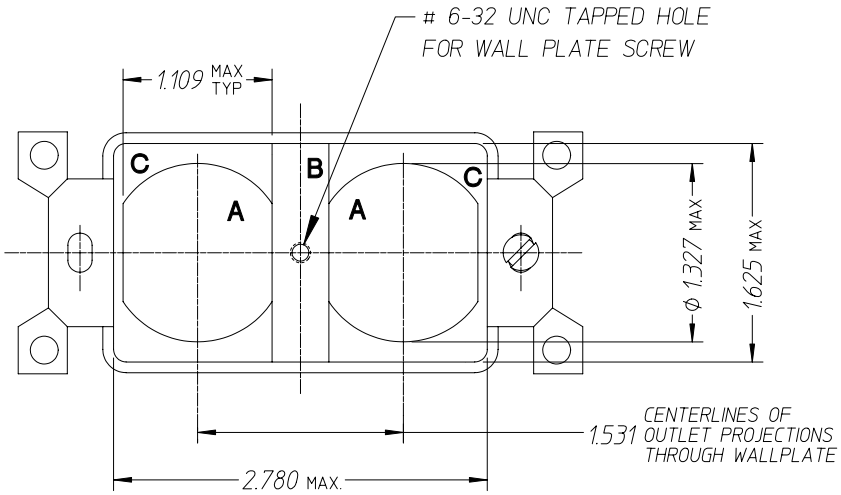

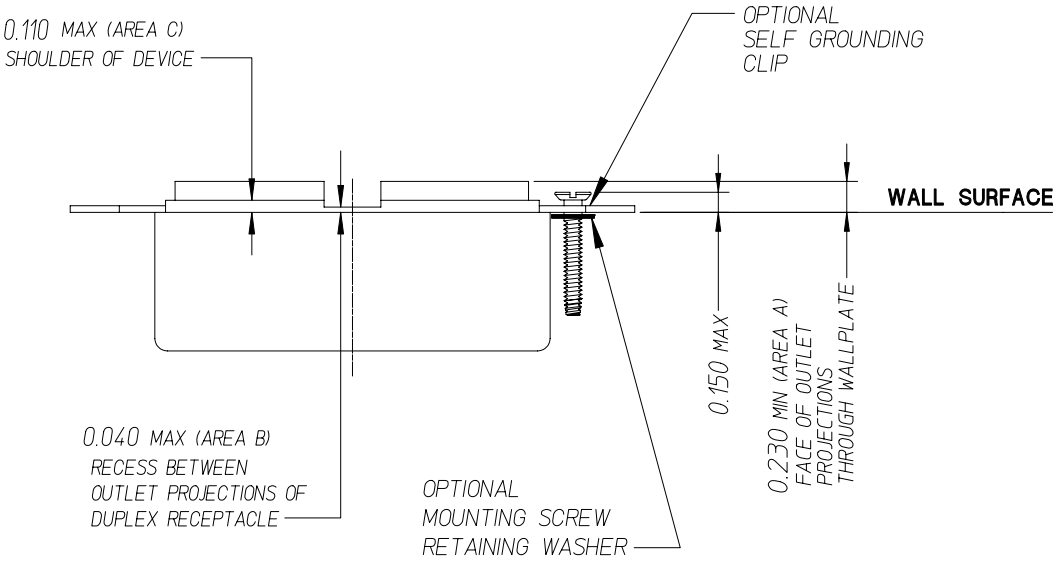

NOTES:

1. SEE PAGE 8 FOR YOKE DIMENSIONS.
2. CENTER LINE SPACING OF DUPLEX OUTLET FACE CONFIGURATIONS LISTED IN NOTE # 3 TO BE 1.531 MIN.
3. TYPICAL DUPLEX RECTANGULAR STYLE CONFIGURATIONS ARE:

   1–15, 5–15, 5–20, 6–15, 6–20, 7–15 , L1–15, L2–20, L5–15, L6–15, L7–15, L11–15

© Copyright 2002 by the National Electrical Manufacturers Association.

DIMENSIONS FOR FLUSH MOUNT RECTANGULAR FACE DEVICES
RECEPTACLES, SWITCHES, EXCLUDING GFCI'S, DIMMERS, MOTION SENSORS, ETC...

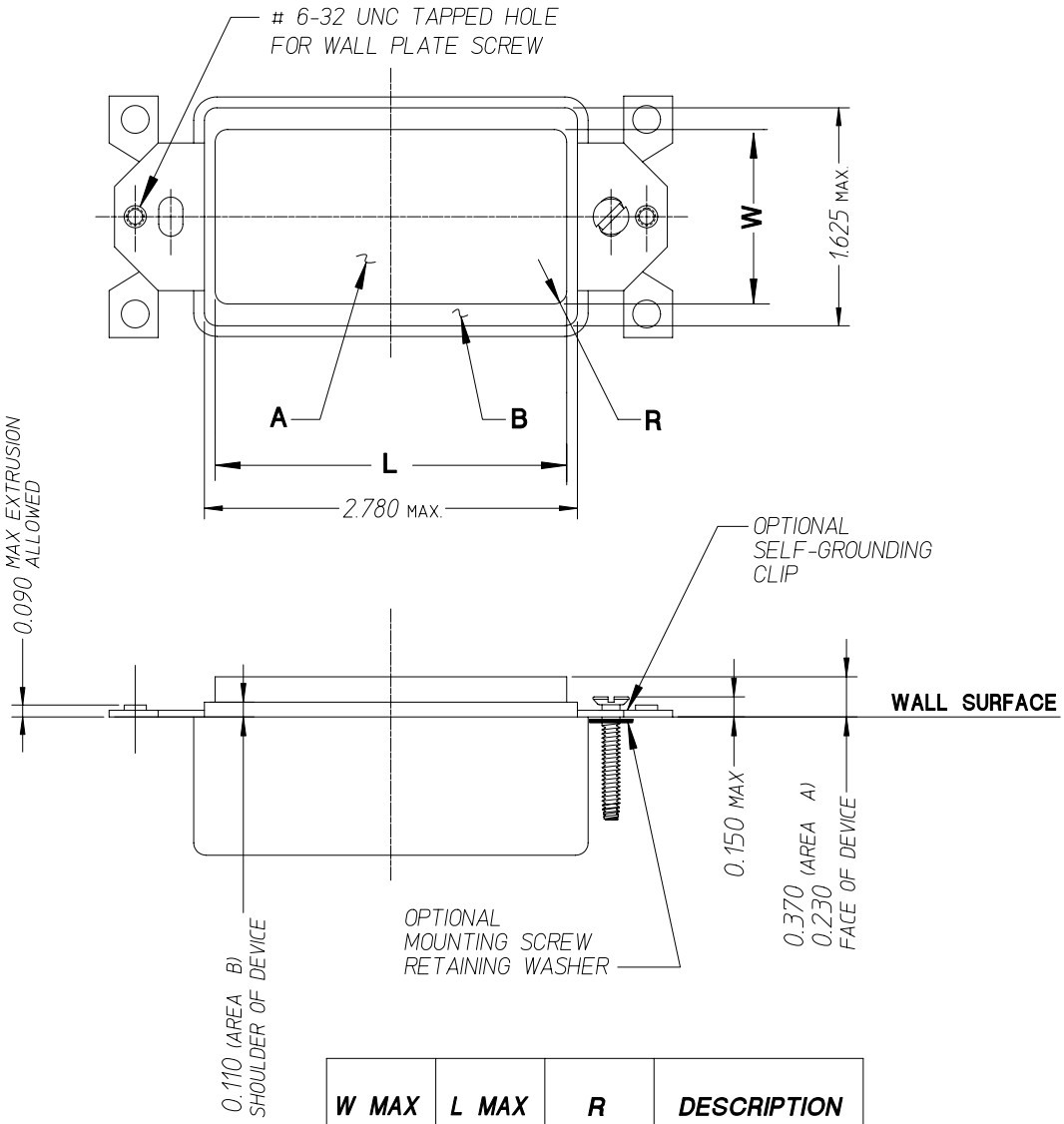

W MAX	*L MAX*	*R*	*DESCRIPTION*
1.300	2.620	0.094	DUPLEX DEVICE
1.060	2.880	0.062	TRIPLEX DEVICE

NOTES:

1. SEE PAGE 8 FOR YOKE DIMENSIONS.

2. CENTER LINE SPACING OF DUPLEX OUTLET FACE CONFIGURATIONS LISTED IN NOTE # 3 TO BE 1.531 MIN.

3. TYPICAL DUPLEX RECTANGULAR STYLE CONFIGURATIONS ARE:

1–15, 5–15, 5–20, 6–15, 6–20, 7–15 , L1–15, L2–20, L5–15, L6–15, L7–15, L11–15

© Copyright 2002 by the National Electrical Manufacturers Association.

DIMENSIONS FOR RECTANGULAR FACE DEVICES INCORPORATING PROTRUDING ACTUATORS

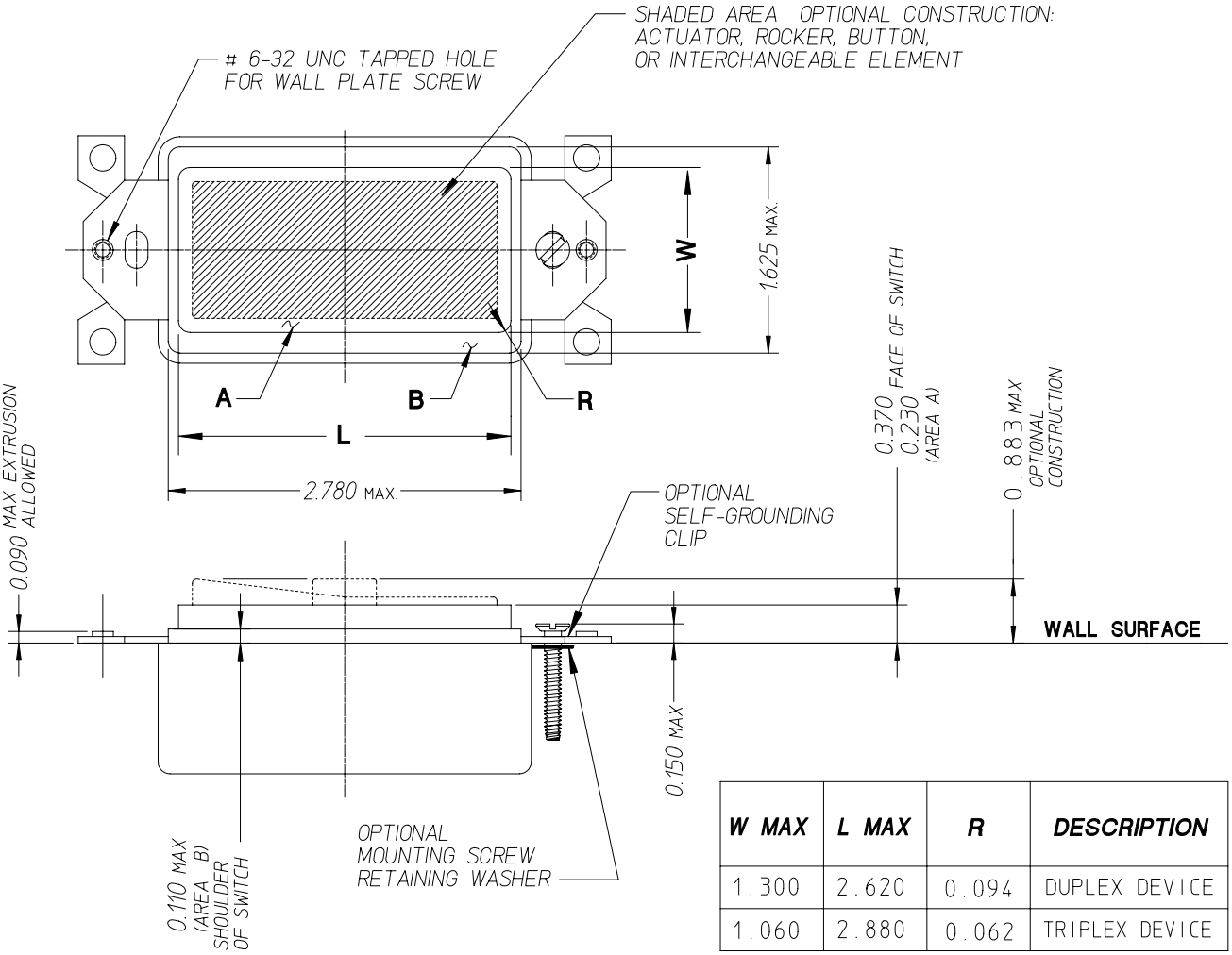

W MAX	L MAX	R	DESCRIPTION
1.300	2.620	0.094	DUPLEX DEVICE
1.060	2.880	0.062	TRIPLEX DEVICE

DIMENSIONS FOR RECTANGULAR FACE DEVICES INCORPORATING SWITCH TOGGLES

ALL OTHER DIMENSIONS NOT SHOWN, SEE ABOVE

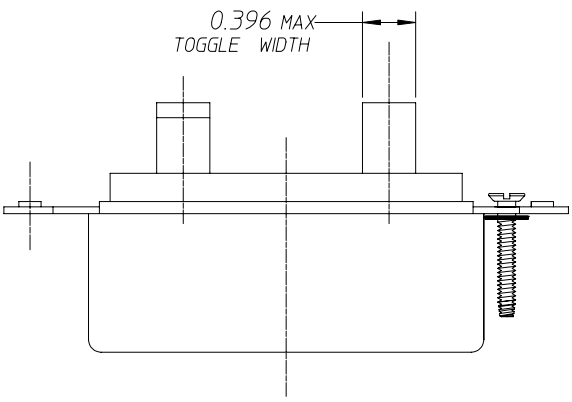

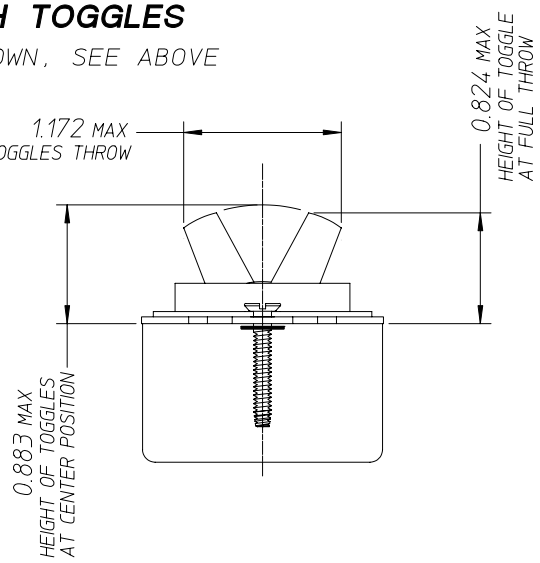

NOTE: SEE PAGE 8 FOR YOKE DIMENSIONS.

© Copyright 2002 by the National Electrical Manufacturers Association.

DIMENSIONS FOR ROUND AND RECTANGULAR FACE SINGLE DEVICES

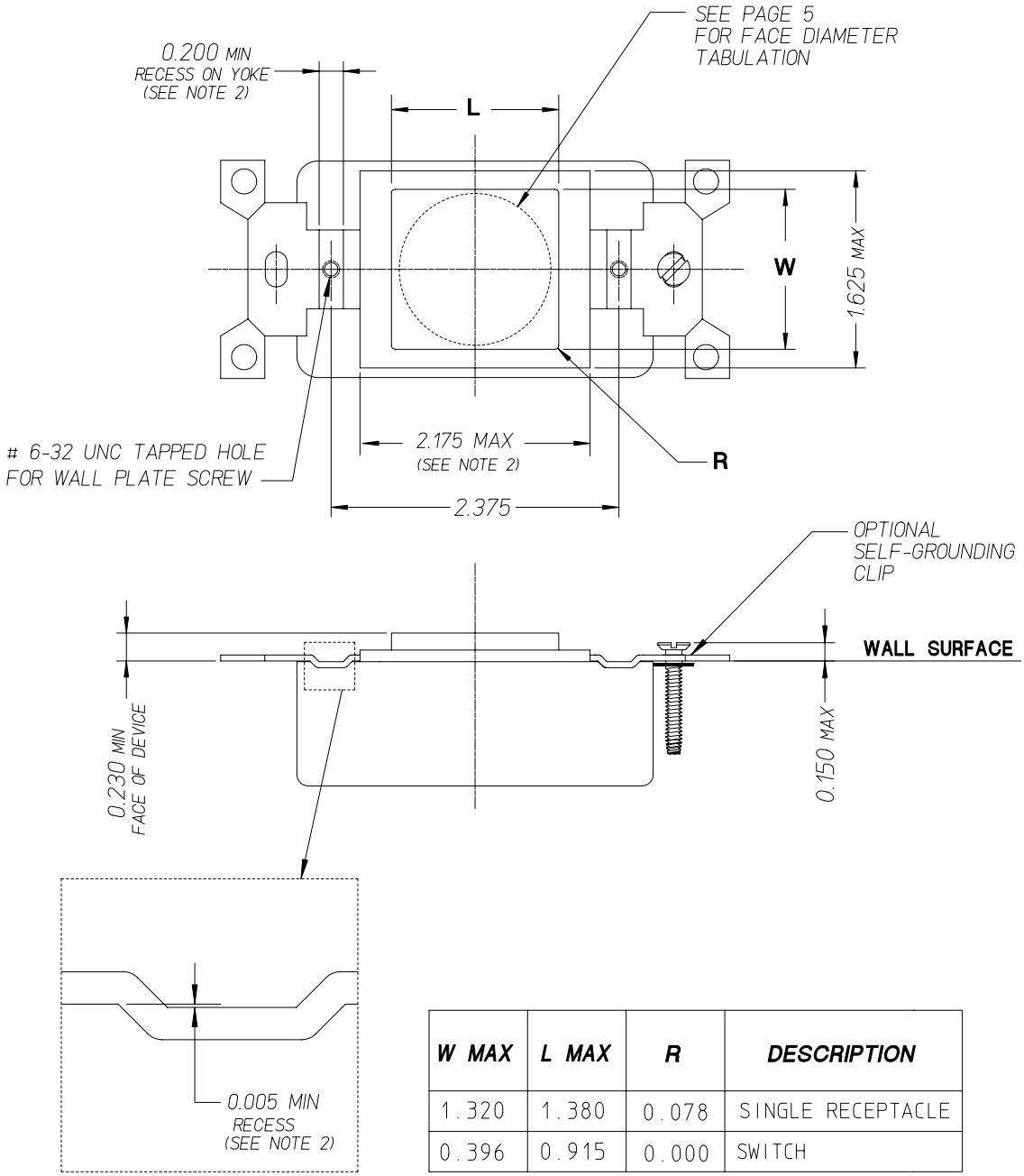

W MAX	*L MAX*	*R*	*DESCRIPTION*
1.320	1.380	0.078	SINGLE RECEPTACLE
0.396	0.915	0.000	SWITCH

NOTES:

1. SEE PAGE 8 FOR YOKE DIMENSIONS.

2 THIS DIMENSION IS INTENDED FOR STRAIGHT BLADE SINGLE RECEPTACLES AND SWITCHES TO CLEAR THE REINFORCING RIBS IN PLASTIC PLATES

© Copyright 2002 by the National Electrical Manufacturers Association.

DIMENSIONS FOR INTERCHANGEABLE TYPE SINGLE, DUPLEX, AND TRIPLEX DEVICES

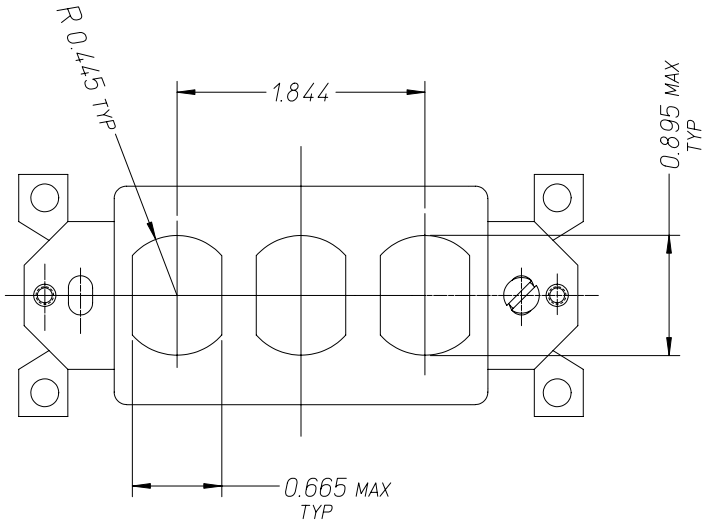

NOTES:

1– SEE PAGE 8 FOR YOKE DIMENSIONS

© Copyright 2002 by the National Electrical Manufacturers Association.

WIRING DEVICE MAXIMUM ENVELOPE DIMENSION

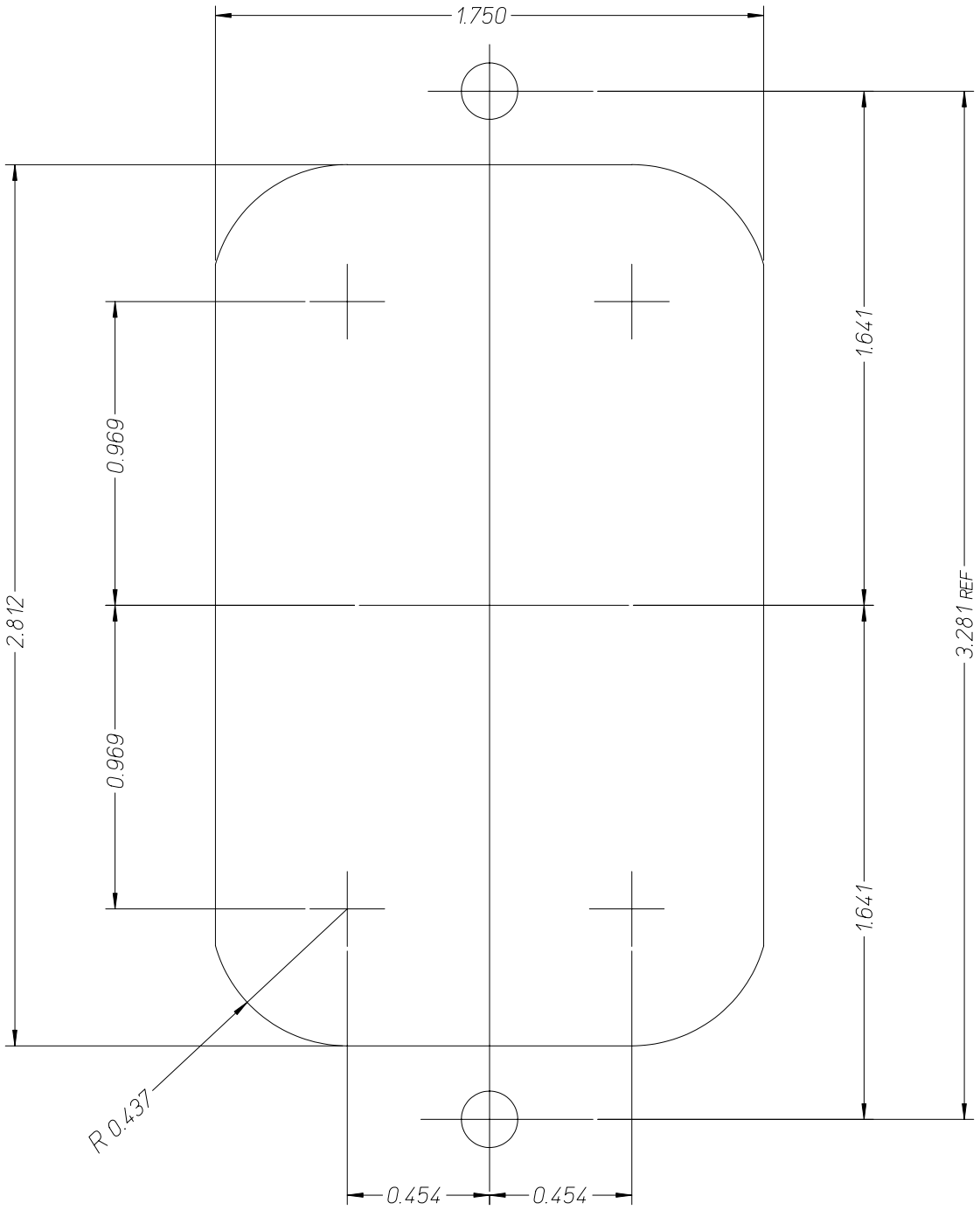

NOTES:

1– THIS STANDARD CORRESPONDS TO NEMA STANDARDS PUBLICATION OS–1 SHEET–STEEL OUTLET BOXES, DEVICE BOXES, COVERS AND BOX SUPPORTS, STANDARD FOR MINIMUM BOX/COVER FACE OPENING, AND DOES NOT ADDRESS ELECTRICAL CLEARANCES. AVAILABLE SPACE AT DEPTHS WITHIN THE BOX MAY BE FURTHER REDUCED BY ACCESSORY HARDWARE SUCH AS MACHINE SCREWS, NAILS, CABLE CLAMPS, FIXTURE STUDS, ETC.

© Copyright 2002 by the National Electrical Manufacturers Association.

DIMENSIONS FOR FLANGED INLETS AND CONNECTOR BODIES.

BLADE DIMENSIONS SHALL CONFORM WITH THE DIMENSIONS FOR PLUG BLADES OF THE SAME RATING AS SHOWN IN INDIVIDUAL CONFIGURATION RATING. THE MALE BASE SHALL ACCEPT A CYLINDER OF DIAMETER 'C' DESCRIBED ABOUT THE CENTER OF THE PLUG CAP CONFIGURATION OF THE SAME RATING FOR A DEPTH NOT LESS THAN DIMENSION 'B'.

THE CONNECTOR BODY SHALL FIT WITHIN A CIRCLE OF DIAMETER 'C' DESCRIBED ABOUT THE CENTER OF THE RECEPTACLE CONFIGURATION OF THE SAME RATING FOR A LENGTH 'D' NOT LESS THAN 0.015 INCH PLUS THE MAXIMUM LENGTH OF DIMENSION 'B'.

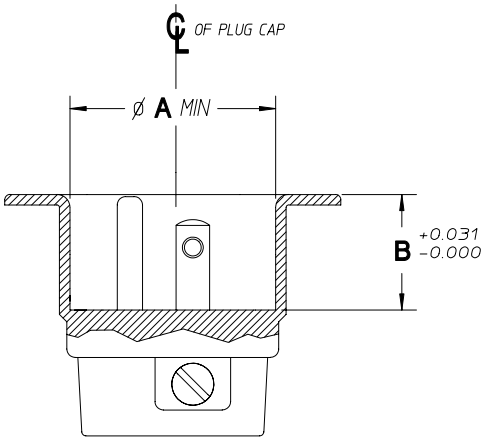

FLANGED INLET

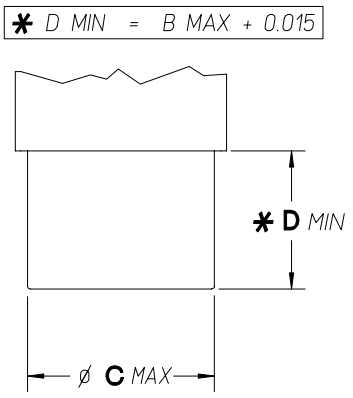

CONNECTOR BODY

CONFIGURATION NUMBER	*DIMENSIONS*		
	ø A	ø C	B
ML-1	0.990	0.970	0.468
ML-2, ML-3	1.150	1.130	0.468
1-15, 2-15, 5-15, 5-20, 6-15, 6-20, 7-15, 11-15, 11-20, 14-15, 15-15, 18-15, 24-15, 24-20, L1-15, L2-20, L5-15, L6-15, L7-15, L11-15	1.550	1.531	0.843
2-20, 7-20, 10-20, 14-20, 15-20, 18-20	2.030	2.010	0.875
2-30, 5-30, 5-50, 6-30, 6-50, 7-30, 7-50, 10-30, 10-50, 11-30, 11-50, 14-30, 14-50, 14-60, 15-30, 15-50, 15-60, 18-30, 18-50, 18-60, 24-30, 24-50	2.620	2.600	1.406
L5-20, L6-20, L7-20, L8-20, L9-20, L10-20, L11-20, L12-20	1.880	1.860	0.921
L5-30, L6-30, L7-30, L8-30, L9-30, L10-30, L11-30, L12-3, L13-30	1.880	1.860	1.000
L14-20, L15-20, L16-20, L18-20, L19-20, L20-20, L21-20, L22-20, L23-20, L24-20	2.000	1.980	0.921
L14-30, L15-30, L16-30, L17-30, L18-30, L19-30, L20-30, L21-30, L22-30, L23-30	2.000	1.980	1.000

© Copyright 2002 by the National Electrical Manufacturers Association.

FLAT BLADE HOLE LOCATIONS
GENERAL INFORMATION

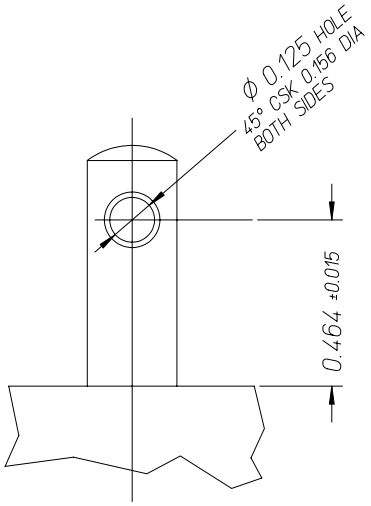

LOCATION # 1

CONFIGURATIONS USING LOCATION # 1

1-15, 2-15, 5-15, 6-15, 7-15, 11-15,
14-15, 15-15, 18-15, 24-15
1-20, 2-20, 5-20, 5-20ALT, 6-20, 6-20ALT
7-20, 10-20, 11-20, 14-20, 15-20, 18-20, 24-20

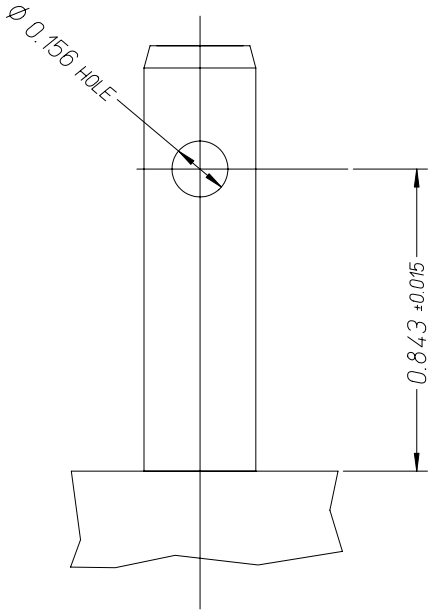

LOCATION # 2

CONFIGURATIONS USING LOCATION # 2

1-30, 2-30, 5-30, 6-30, 7-30, 10-30, 11-30
14-30, 15-30, 18-30, 24-30.
5-50, 6-50, 7-50, 10-50, 11-50, 14-50,
15-50, 18-50, 24-50
14-60, 15-60, 18-60.

NOTES:

1– HOLE IN FLAT BLADE IS OPTIONAL, AND IT IS INTENDED FOR MANUFACTURING PURPOSES ONLY. HOWEVER IF USED IT MUST BE LOCATED AS PER DIMENSIONS SHOWN ABOVE.

© Copyright 2002 by the National Electrical Manufacturers Association.

FIGURE 1–15
PLUG AND RECEPTACLE
125 volts, 15 amperes, 2 pole, 2 wire

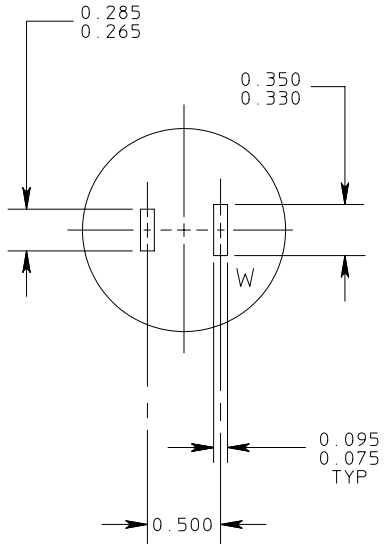

RECEPTACLE

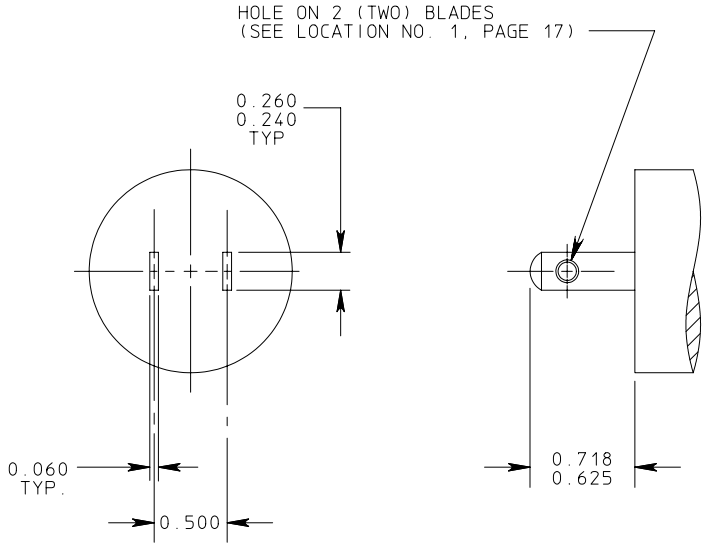

NON–POLARIZED PLUG

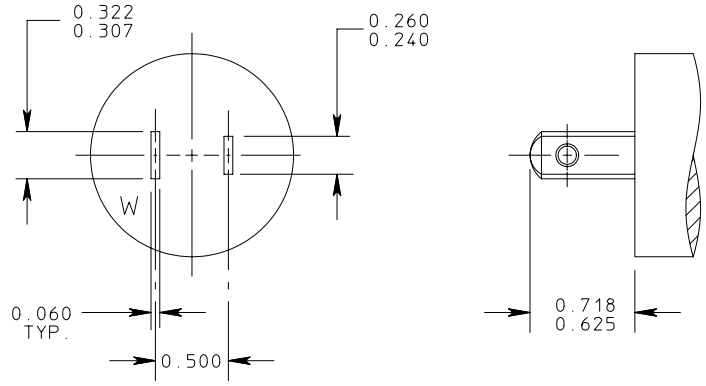

POLARIZED PLUG

NOTE: ***FOR TYPICAL DUPLEX OR RECTANGULAR STYLE DEVICES SEE PAGES NO. 10, 11, AND 12.***

© Copyright 2002 by the National Electrical Manufacturers Association.

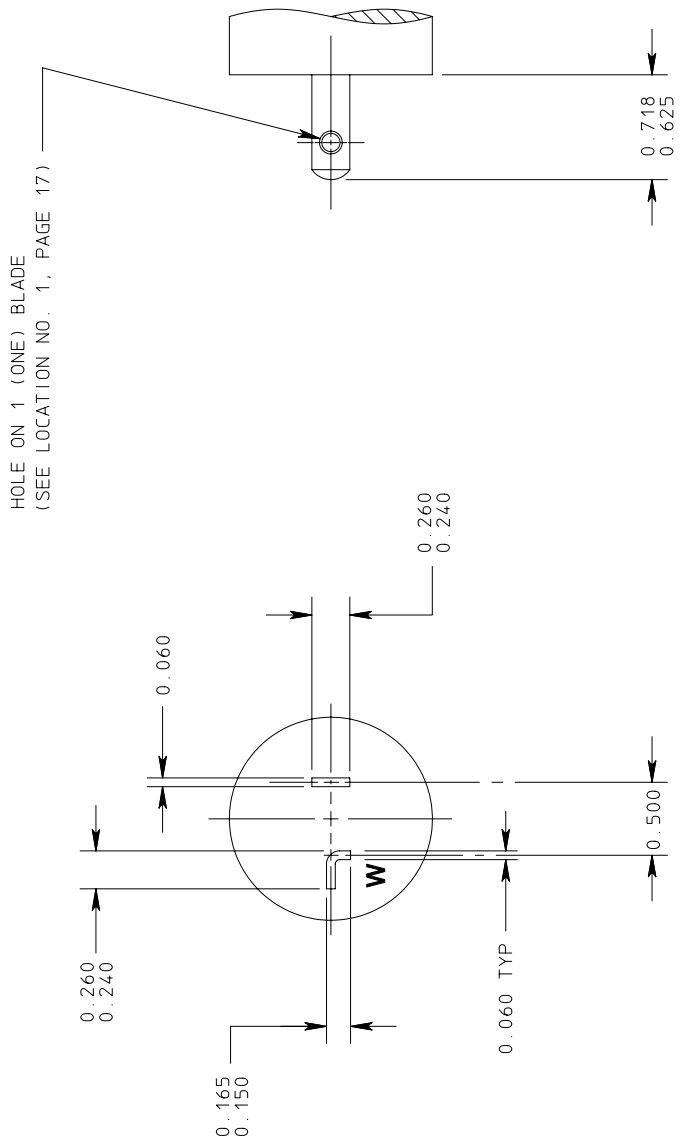

PLUG

NOTE: *THIS PLUG MATES WITH RECEPTACLE CONFIGURATION 5–20.*

FIGURE 1–20
PLUG
125 volts, 20 amperes, 2 pole, 2 wire

© Copyright 2002 by the National Electrical Manufacturers Association.

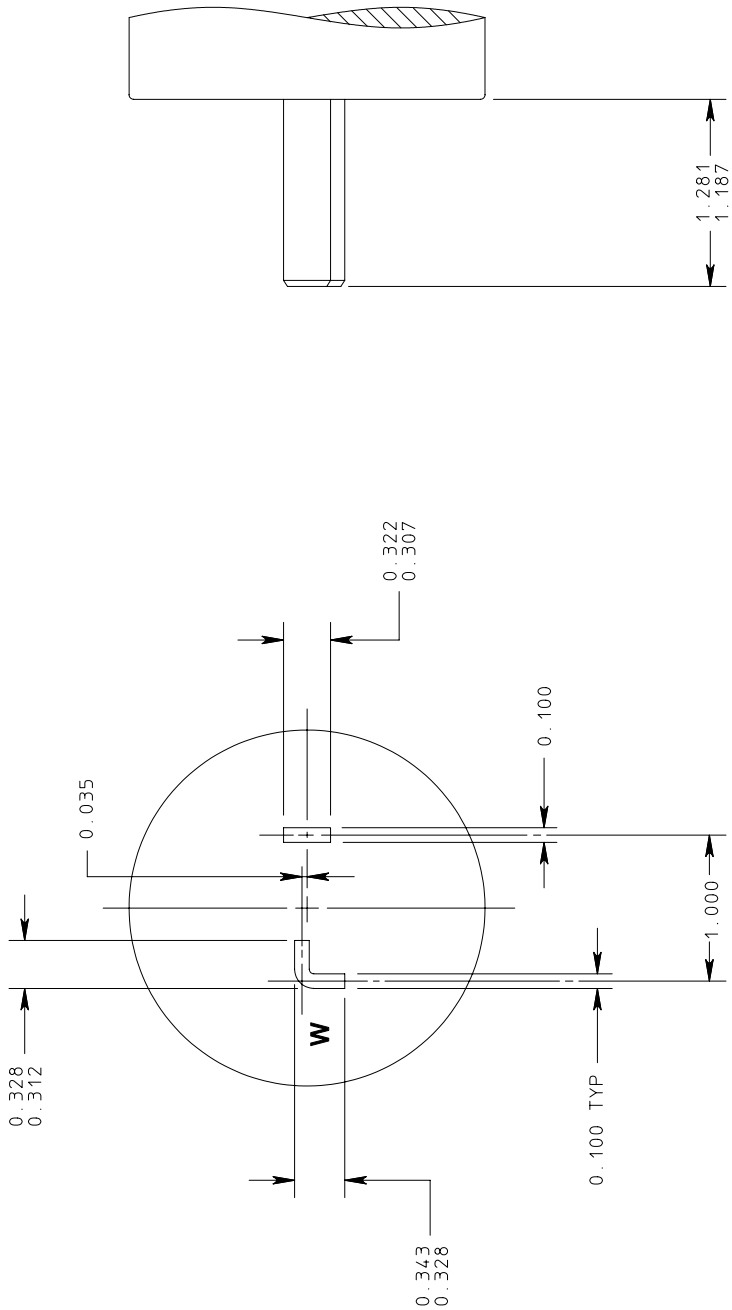

PLUG

NOTE: THIS PLUG MATES WITH RECEPTACLE CONFIGURATION 5–30.

FIGURE 1–30
PLUG
125 volts, 30 amperes, 2 Pole, 2 Wire

© Copyright 2002 by the National Electrical Manufacturers Association.

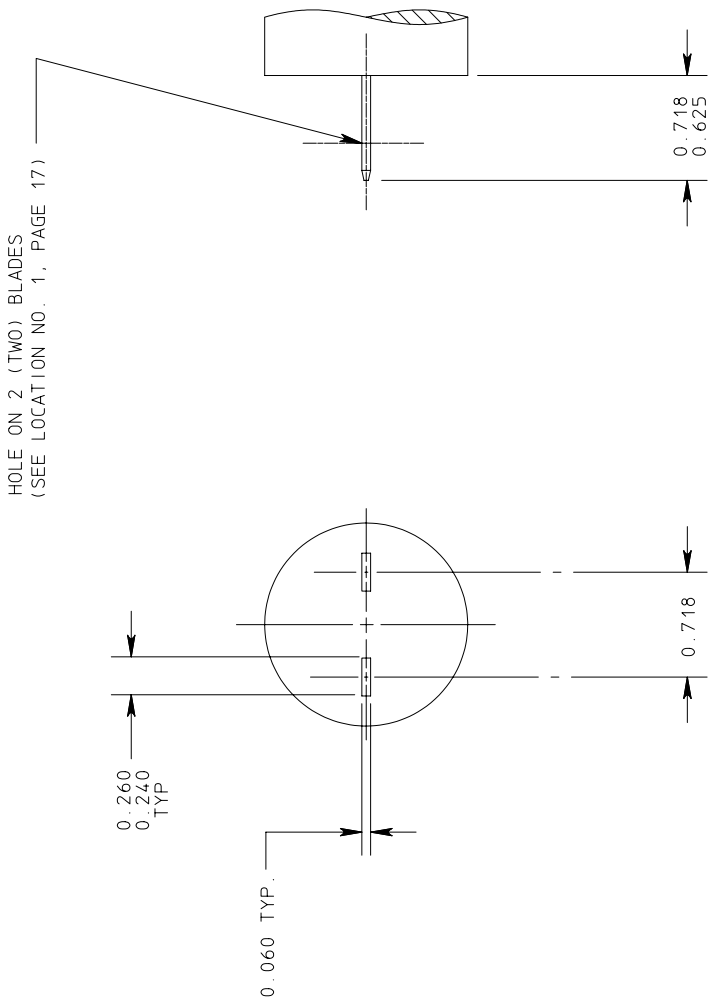

PLUG

NOTE: *THIS PLUG MATES WITH RECEPTACLE CONFIGURATION 6–15*

FIGURE 2–15
PLUG
250 volts, 15 amperes, 2 pole, 2 wire

© Copyright 2002 by the National Electrical Manufacturers Association.

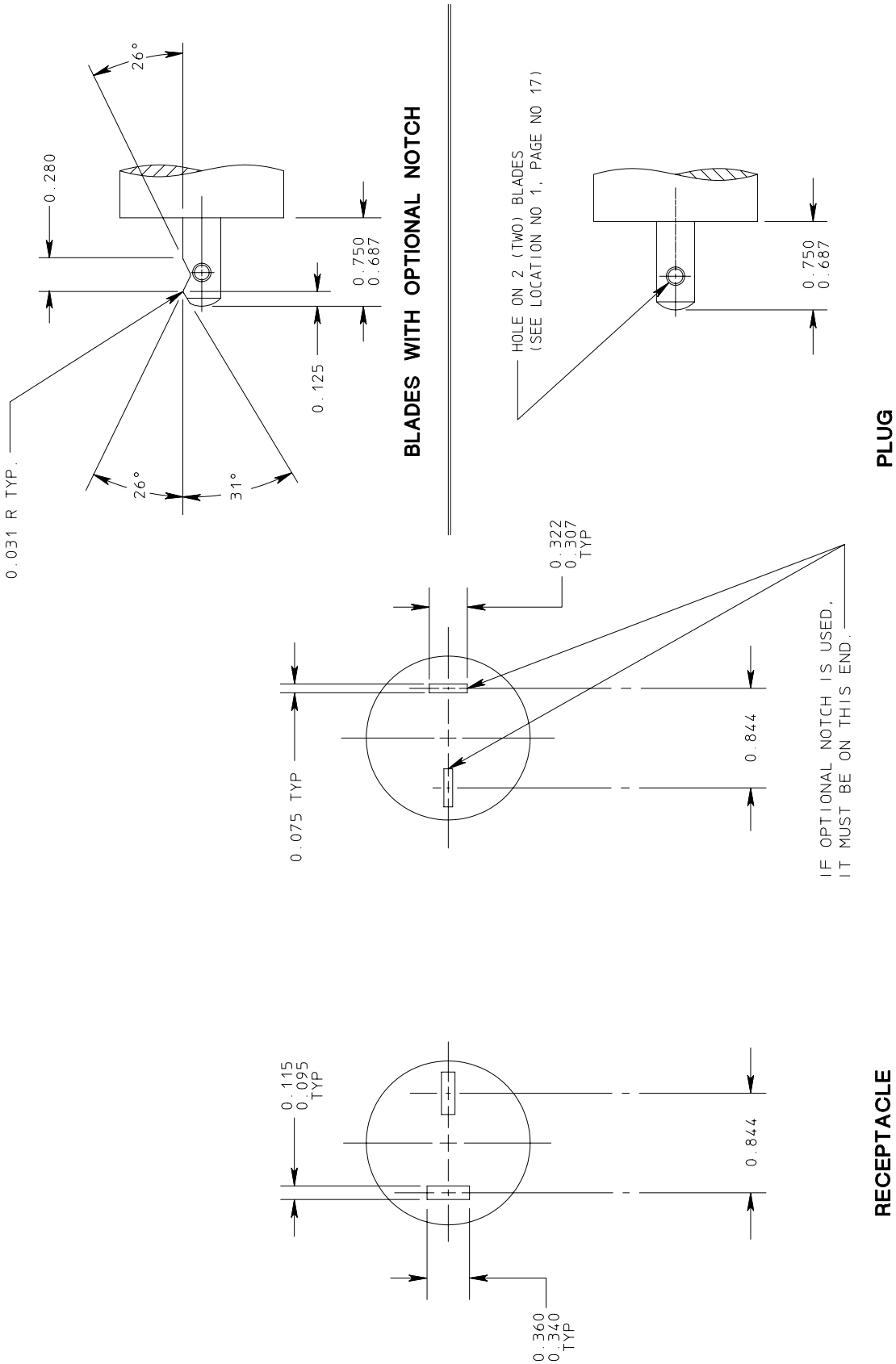

FIGURE 2–20
PLUG AND RECEPTACLE
250 volts, 20 amperes, 2 pole, 2 wire

© Copyright 2002 by the National Electrical Manufacturers Association.

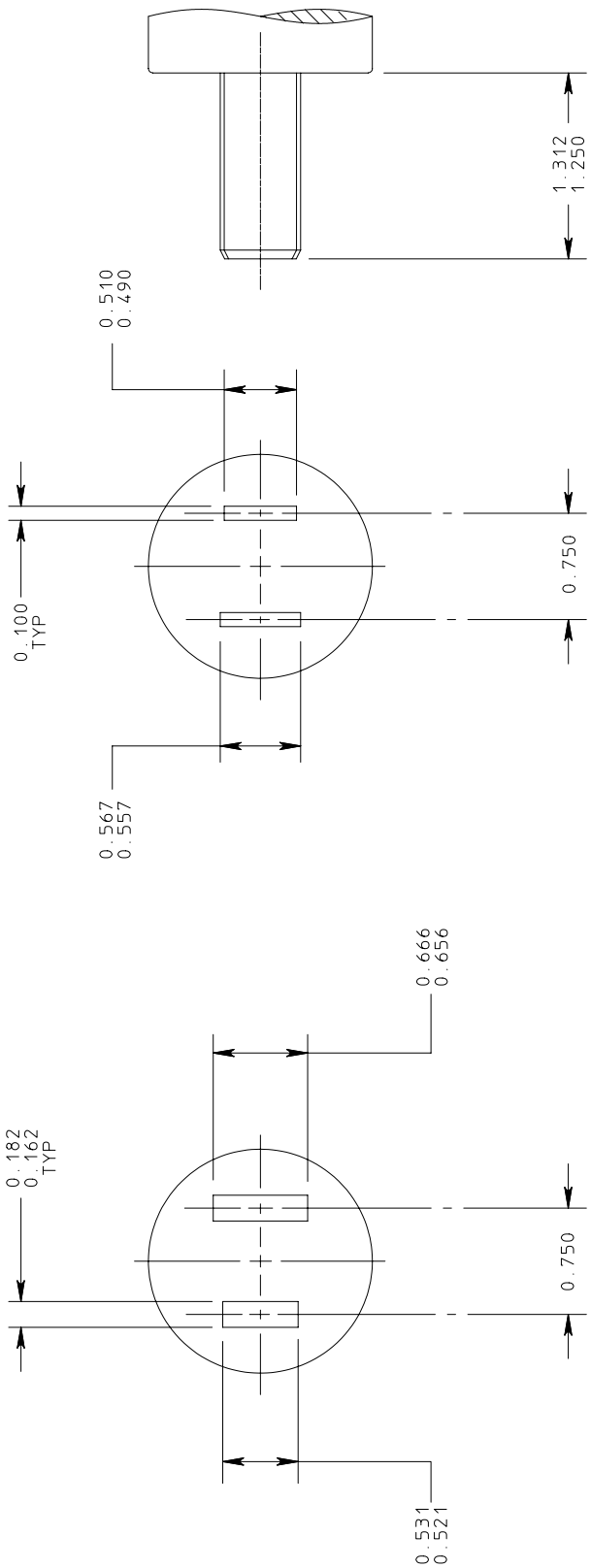

FIGURE 2–30
PLUG AND RECEPTACLE
250 volts, 30 amperes, 2 pole, 2 wire

© Copyright 2002 by the National Electrical Manufacturers Association.

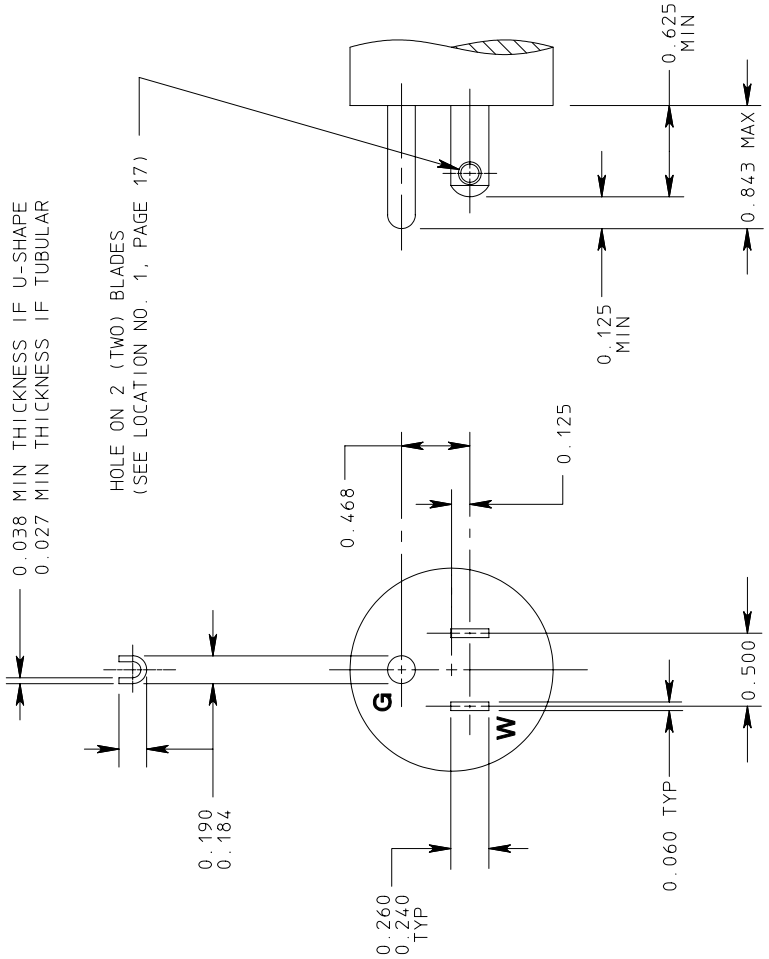

PLUG

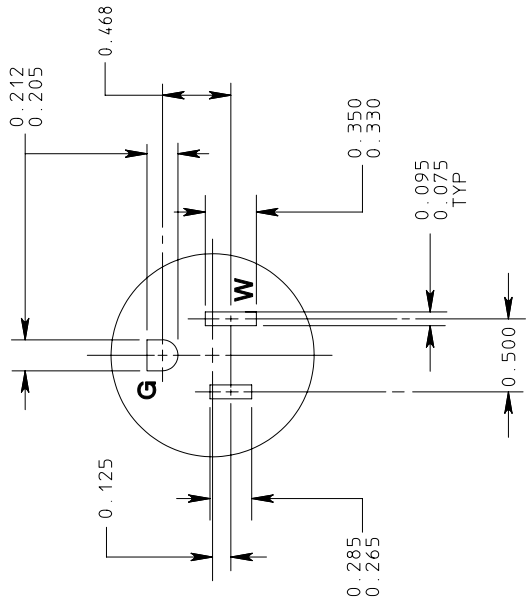

RECEPTACLE

FIGURE 5–15
PLUG AND RECEPTACLE
125 volts, 15 amperes, 2 pole, 3 wire, Grounding type

NOTE: *FOR TYPICAL DUPLEX OR RECTANGULAR STYLE DEVICES SEE PAGES 10, 11, AND 12.*

© Copyright 2002 by the National Electrical Manufacturers Association.

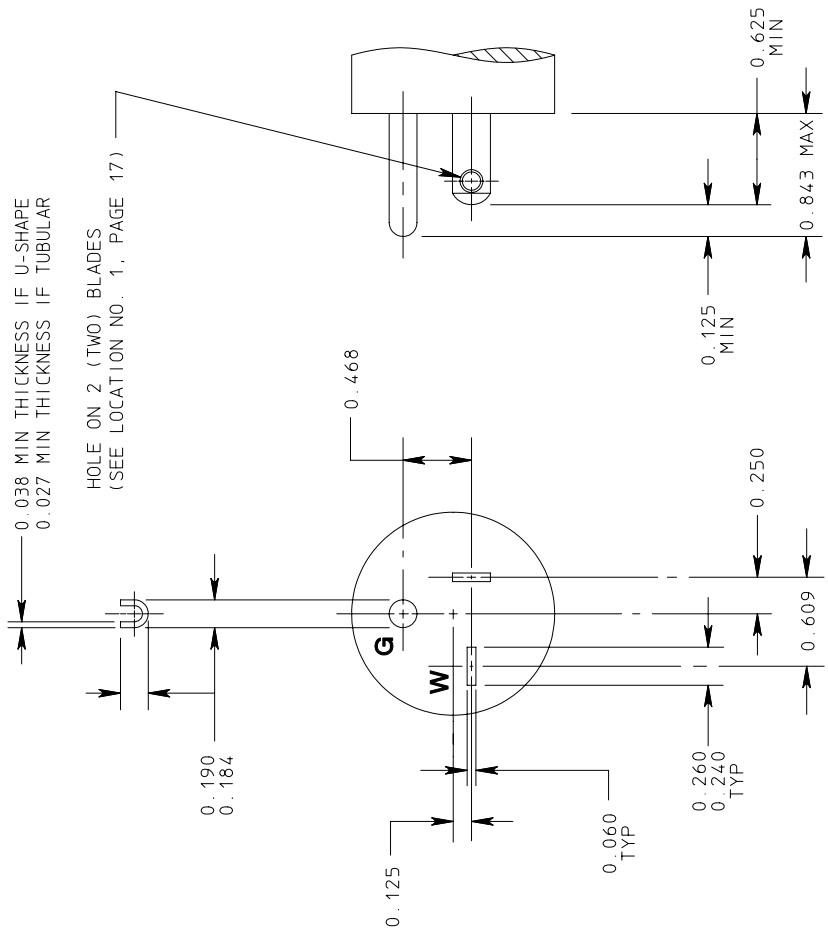

PLUG

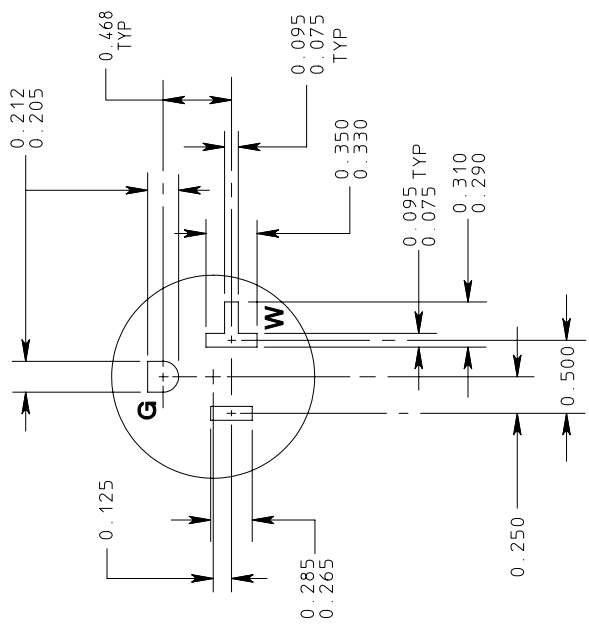

RECEPTACLE

NOTE: FOR TYPICAL DUPLEX OR RECTANGULAR STYLE DEVICES SEE PAGES 10, 11, AND 12.

FIGURE 5–20
PLUG AND RECEPTACLE
125 volts, 20 amperes, 2 pole, 3 wire, Grounding type

© Copyright 2002 by the National Electrical Manufacturers Association.

FIGURE 5–20 ALT (ALTERNATE CONSTRUCTION - CANADA)
RECEPTACLE
125 volts, 20 amperes, 2 pole, 3 wire, Grounding type

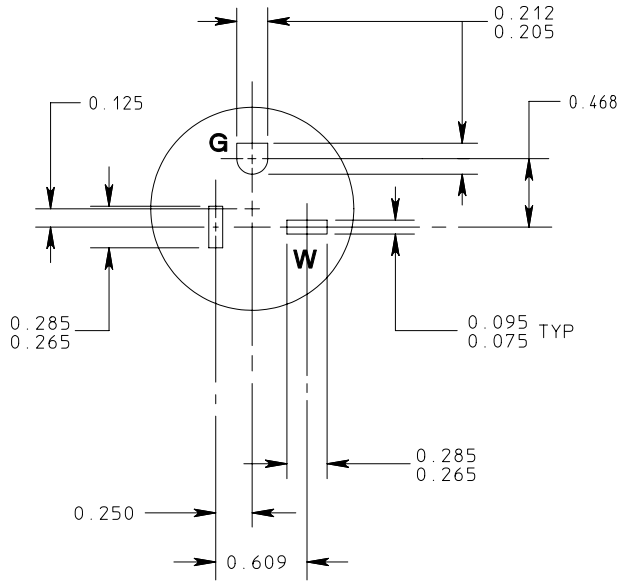

RECEPTACLE

NOTE: ***FOR TYPICAL DUPLEX OR RECTANGULAR STYLE DEVICES SEE PAGES 10, 11, AND 12.***

© Copyright 2002 by the National Electrical Manufacturers Association.

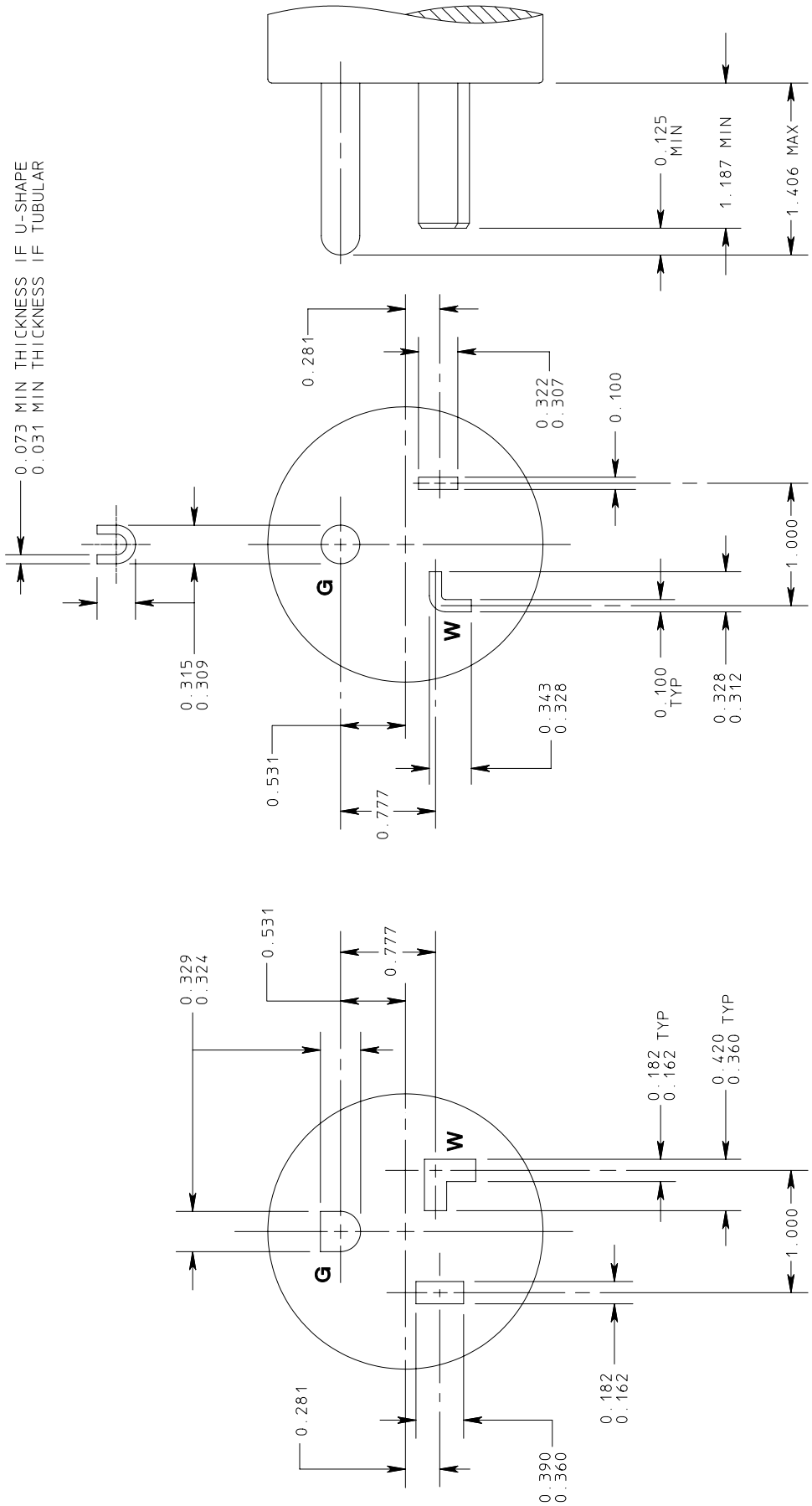

FIGURE 5–30
PLUG AND RECEPTACLE
125 volts, 30 amperes, 2 pole, 3 wire, Grounding type

© Copyright 2002 by the National Electrical Manufacturers Association.

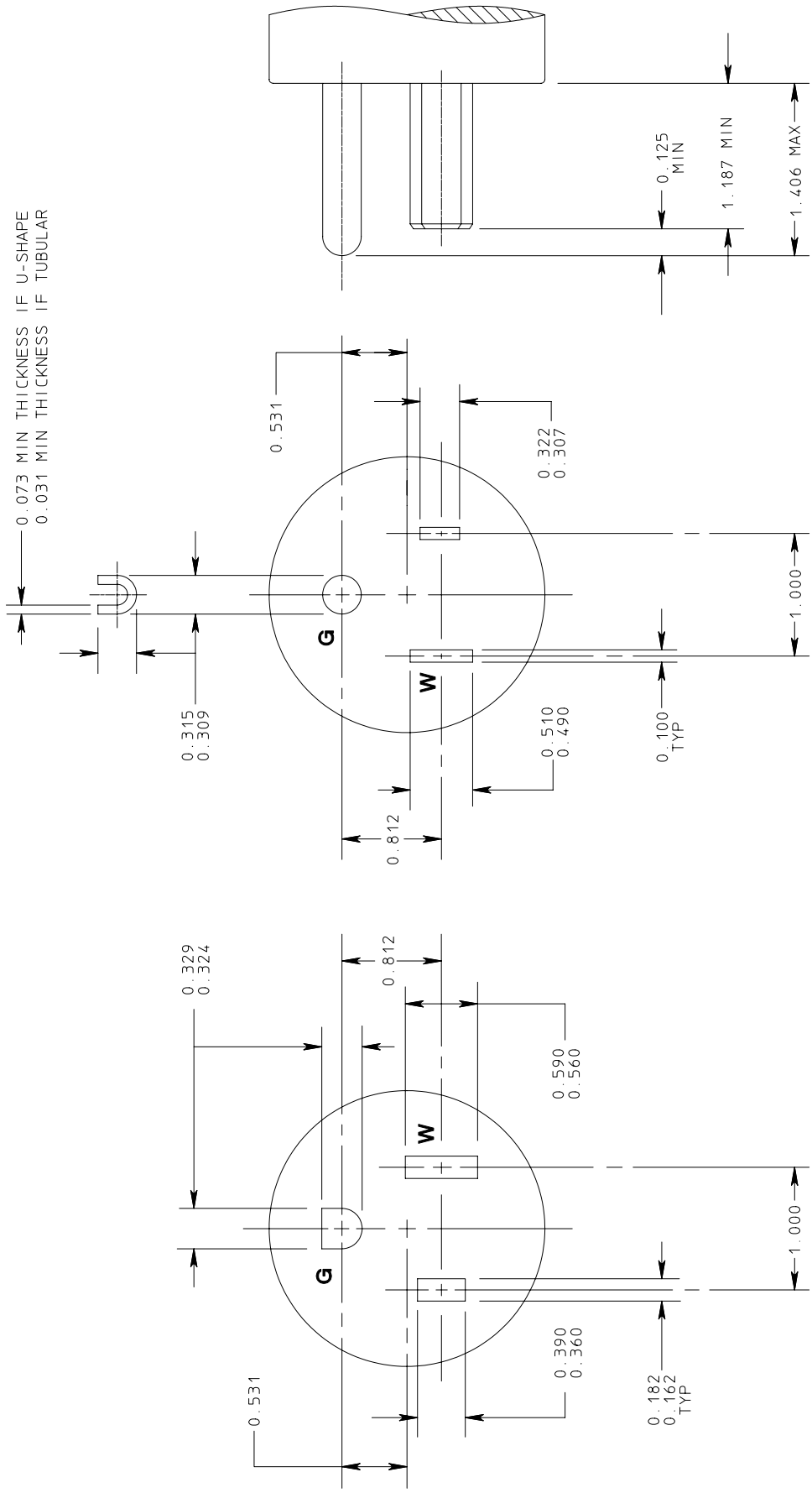

FIGURE 5–50
PLUG AND RECEPTACLE
125 volts, 50 amperes, 2 pole, 3 wire, Grounding type

© Copyright 2002 by the National Electrical Manufacturers Association.

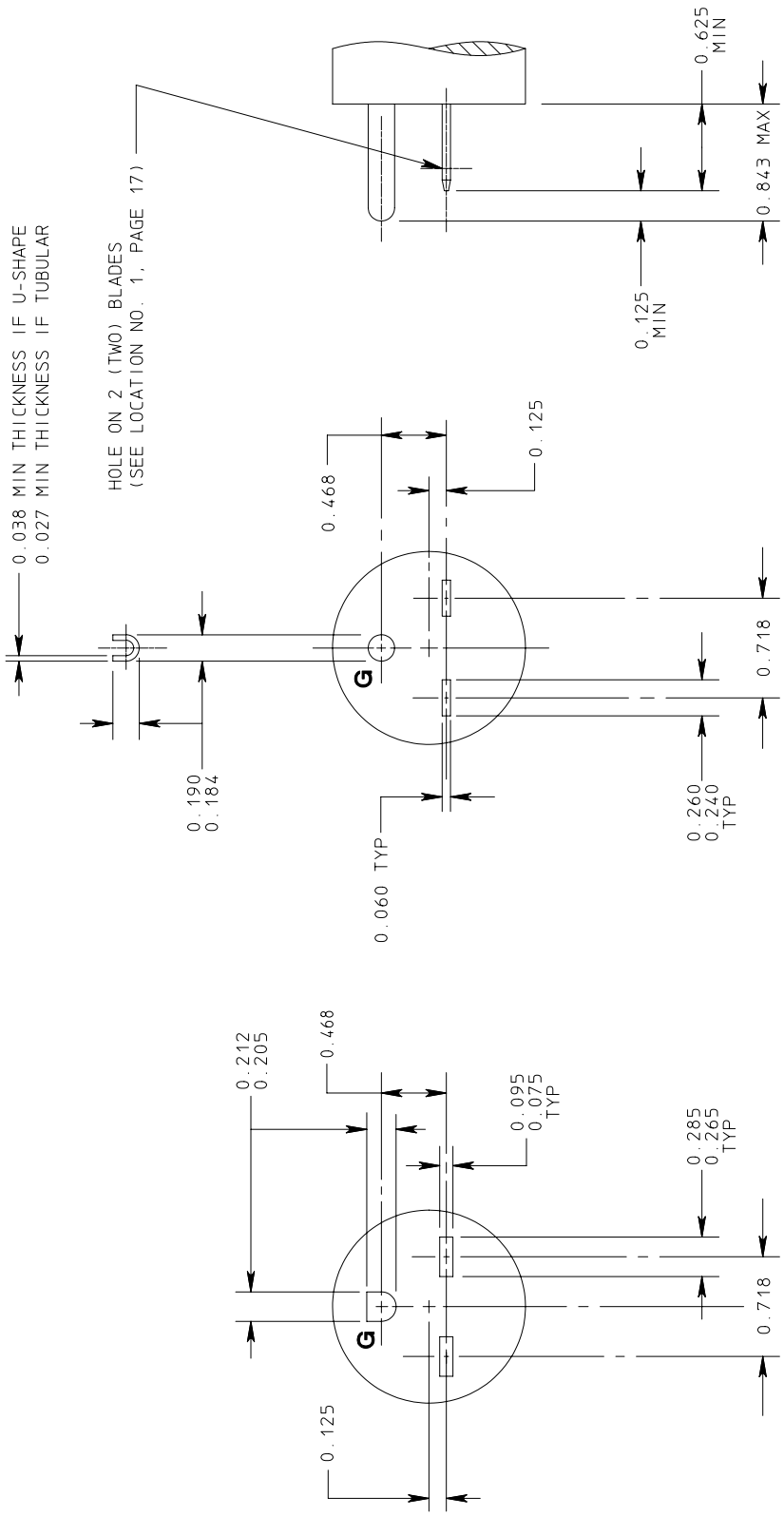

NOTE: *FOR TYPICAL DUPLEX OR RECTANGULAR STYLE DEVICES SEE PAGES 10, 11, AND 12.*

FIGURE 6–15
PLUG AND RECEPTACLE
250 volts, 15 amperes, 2 pole, 3 wire, Grounding type

© Copyright 2002 by the National Electrical Manufacturers Association.

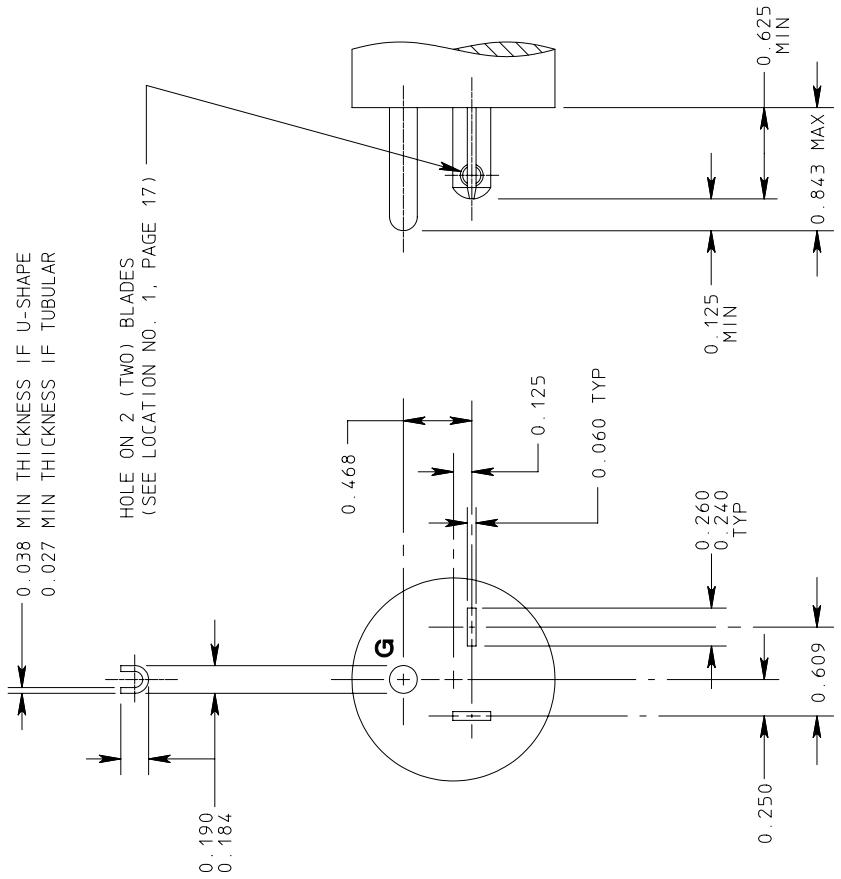

PLUG

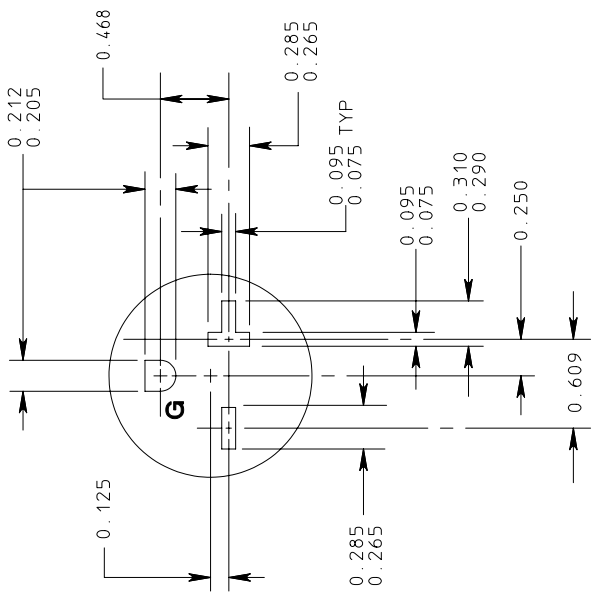

RECEPTACLE

NOTE: *FOR TYPICAL DUPLEX OR RECTANGULAR STYLE DEVICES SEE PAGES 10, 11, AND 12.*

FIGURE 6–20
PLUG AND RECEPTACLE
250 volts, 20 amperes, 2 pole, 3 wire, Grounding type

© Copyright 2002 by the National Electrical Manufacturers Association.

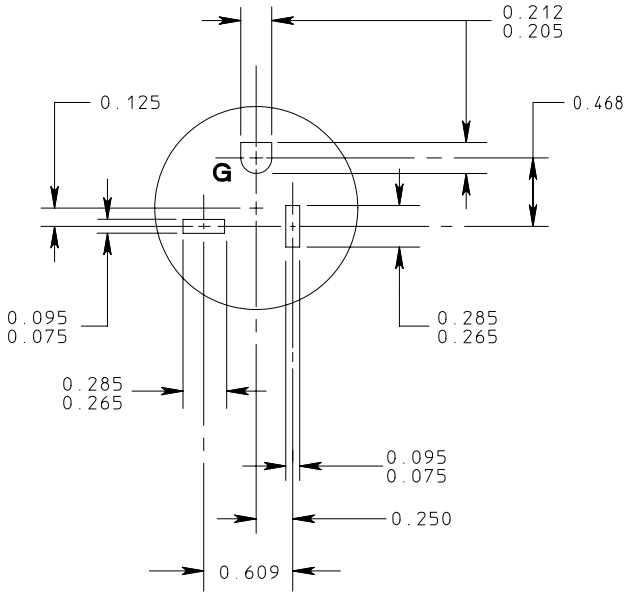

RECEPTACLE

NOTE: ***FOR TYPICAL DUPLEX OR RECTANGULAR STYLE DEVICES SEE PAGES 10, 11, AND 12.***

FIGURE 6–20 ALT (ALTERNATE CONSTRUCTION - CANADA)
RECEPTACLE
250 volts, 20 amperes, 2 pole, 3 wire, Grounding type

© Copyright 2002 by the National Electrical Manufacturers Association.

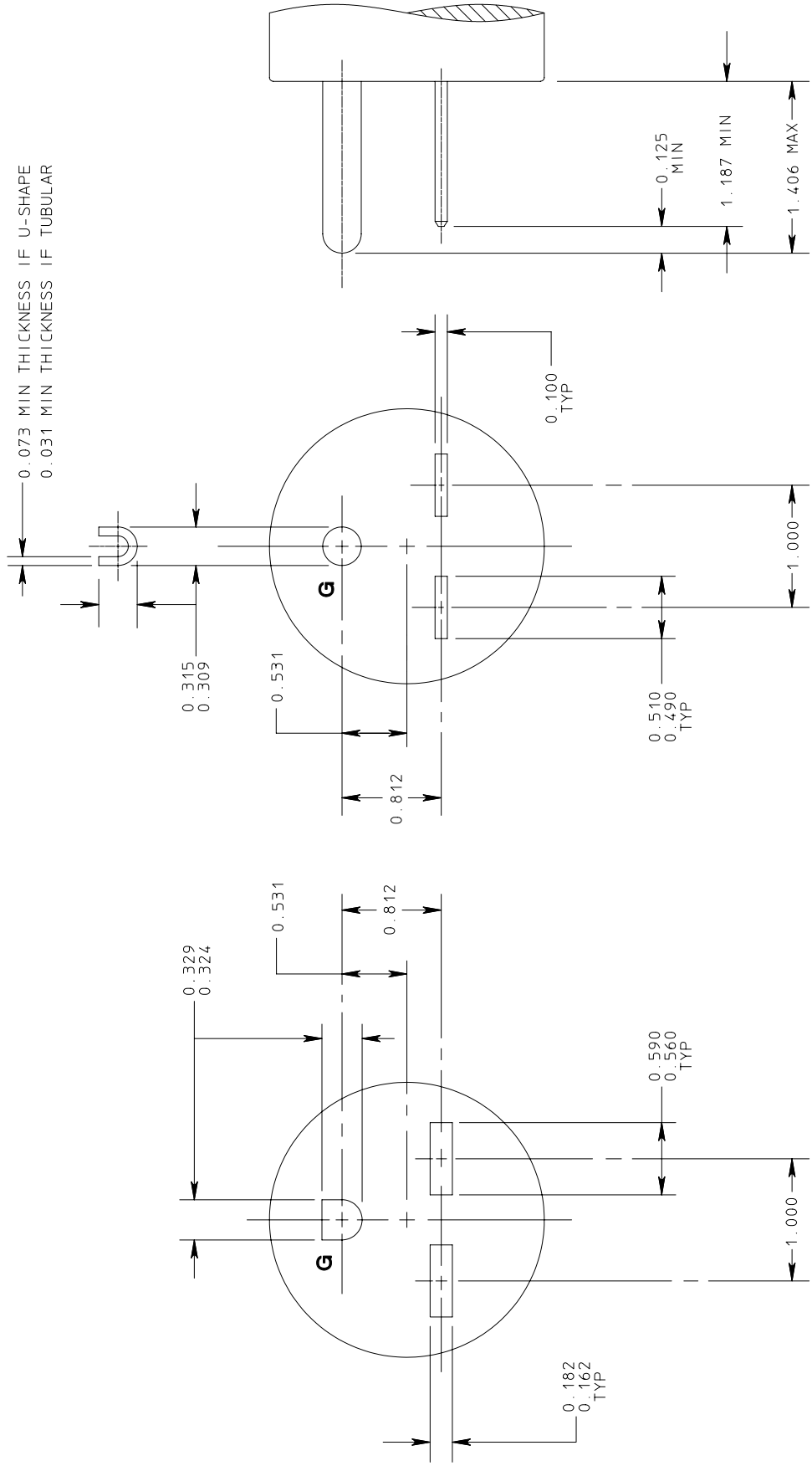

FIGURE 6–30
PLUG AND RECEPTACLE
250 volts, 30 amperes, 2 pole, 3 wire, Grounding type

© Copyright 2002 by the National Electrical Manufacturers Association.

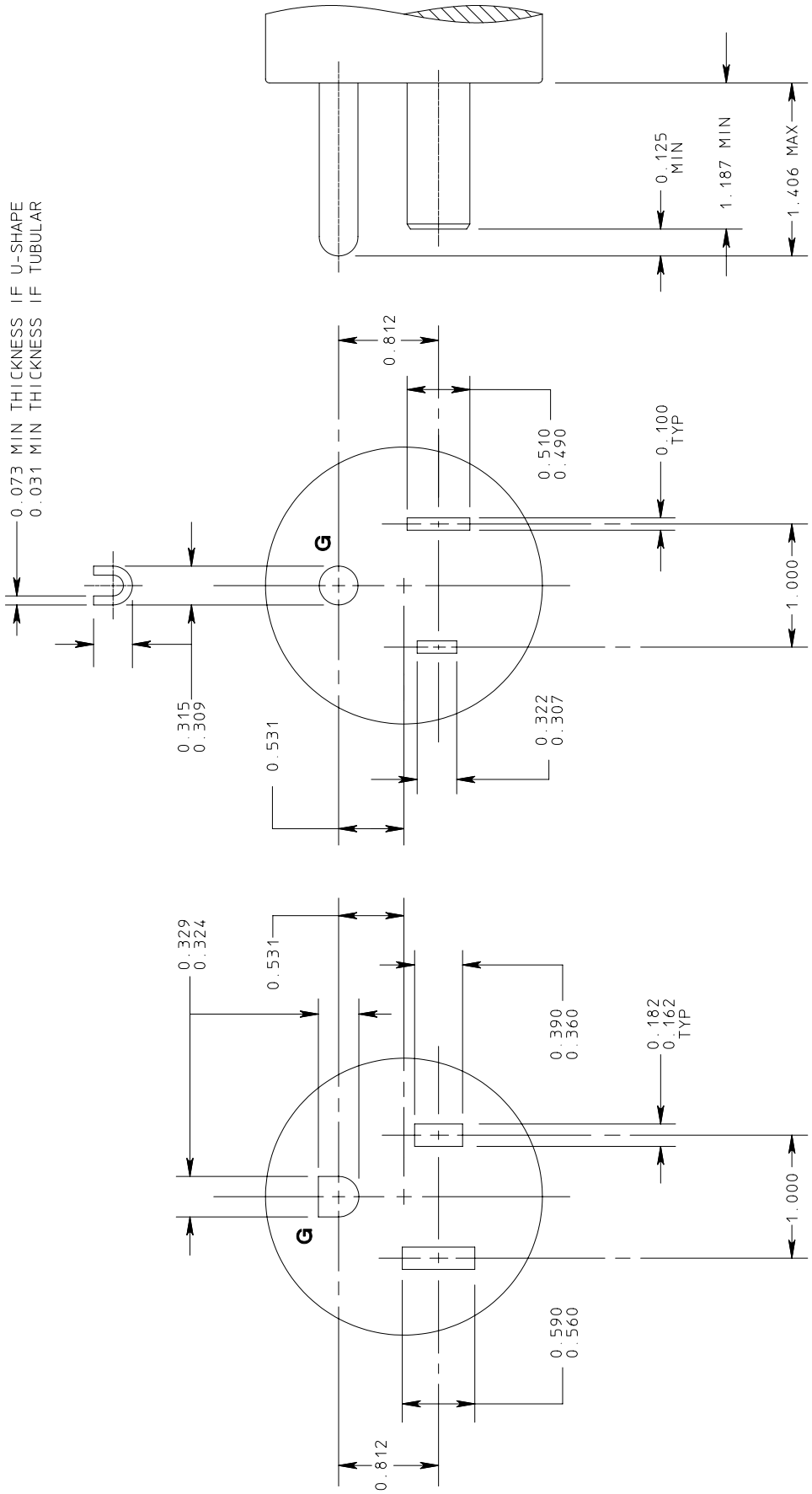

FIGURE 6–50
PLUG AND RECEPTACLE
250 volts, 50 amperes, 2 pole, 3 wire, Grounding type

© Copyright 2002 by the National Electrical Manufacturers Association.

FIGURE 7–15
PLUG AND RECEPTACLE
277 volts ac, 15 amperes, 2 pole, 3 wire, Grounding type

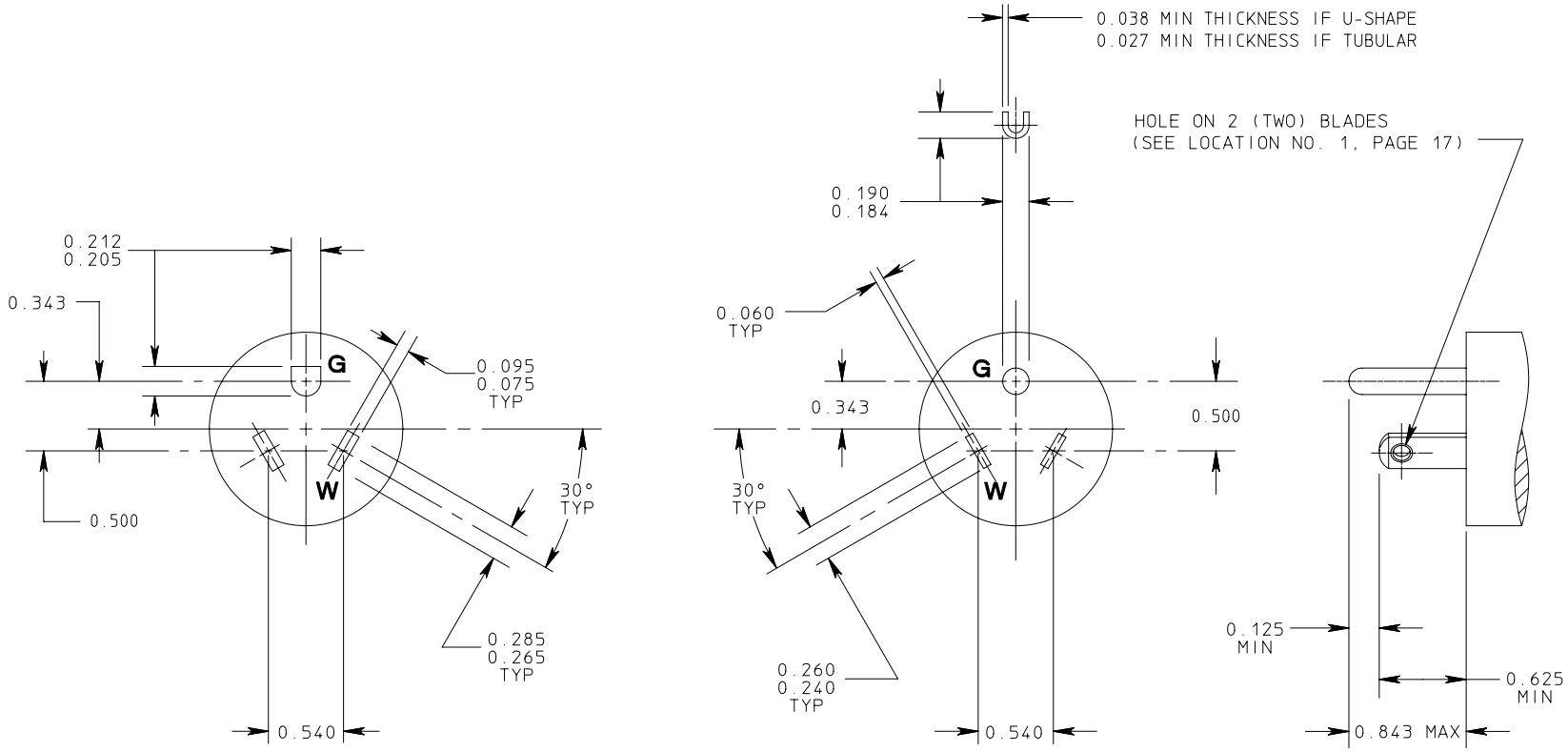

RECEPTACLE **PLUG**

NOTE: ***FOR TYPICAL DUPLEX OR RECTANGULAR STYLE DEVICES SEE PAGES 10, 11, AND 12.***

© Copyright 2002 by the National Electrical Manufacturers Association.

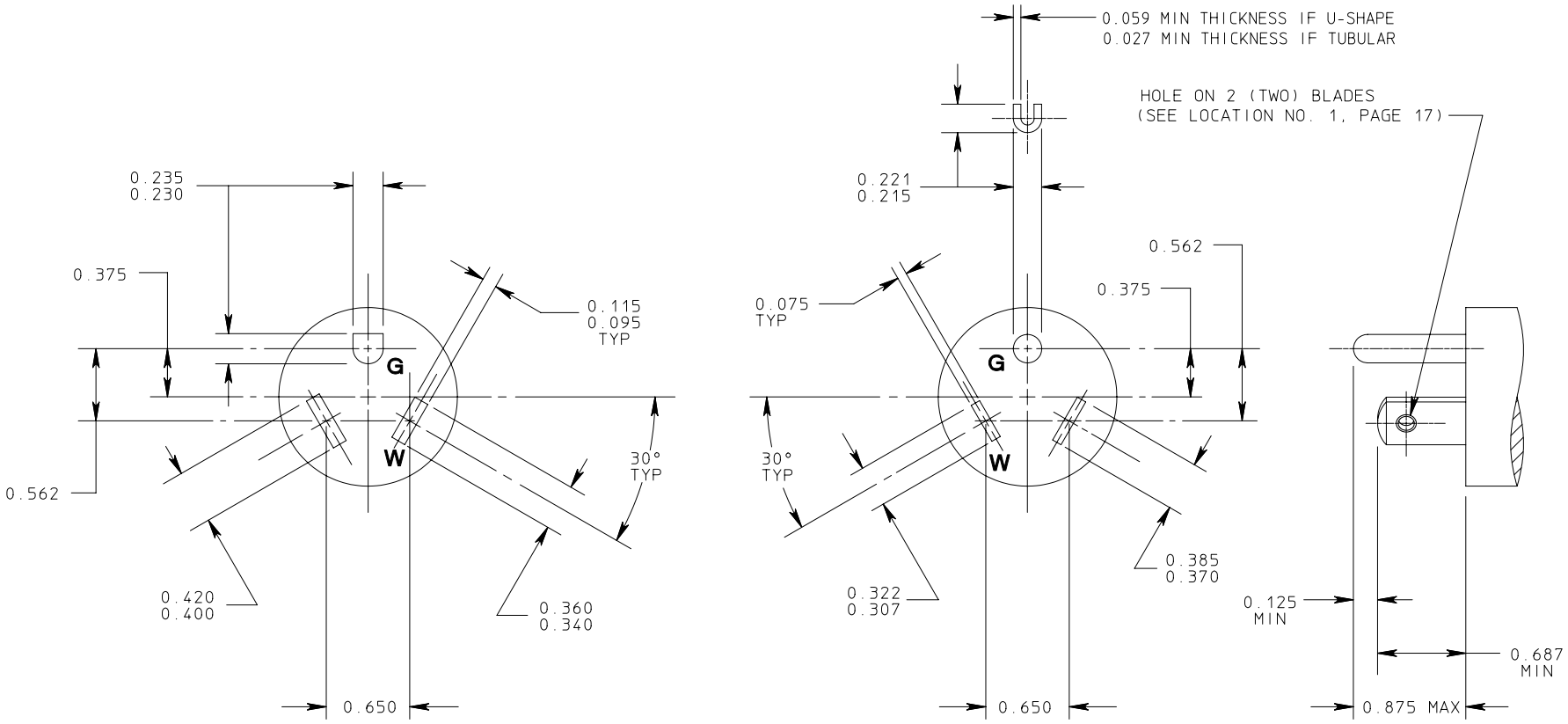

FIGURE 7–20
PLUG AND RECEPTACLE
277 volts ac, 20 amperes, 2 pole, 3 wire, Grounding type

© Copyright 2002 by the National Electrical Manufacturers Association.

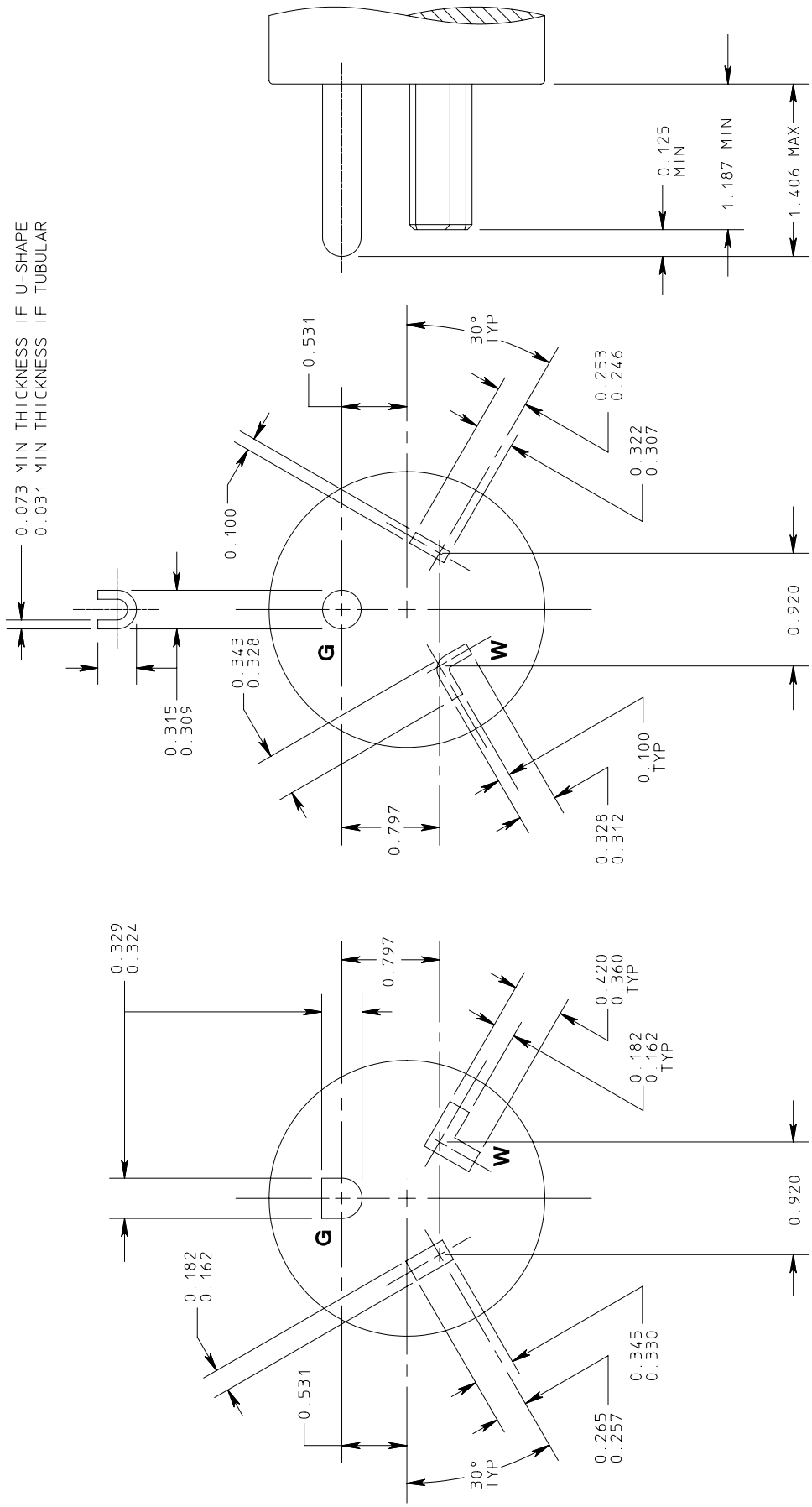

FIGURE 7–30
PLUG AND RECEPTACLE
277 volts ac, 30 amperes, 2 pole, 3 wire, Grounding type

© Copyright 2002 by the National Electrical Manufacturers Association.

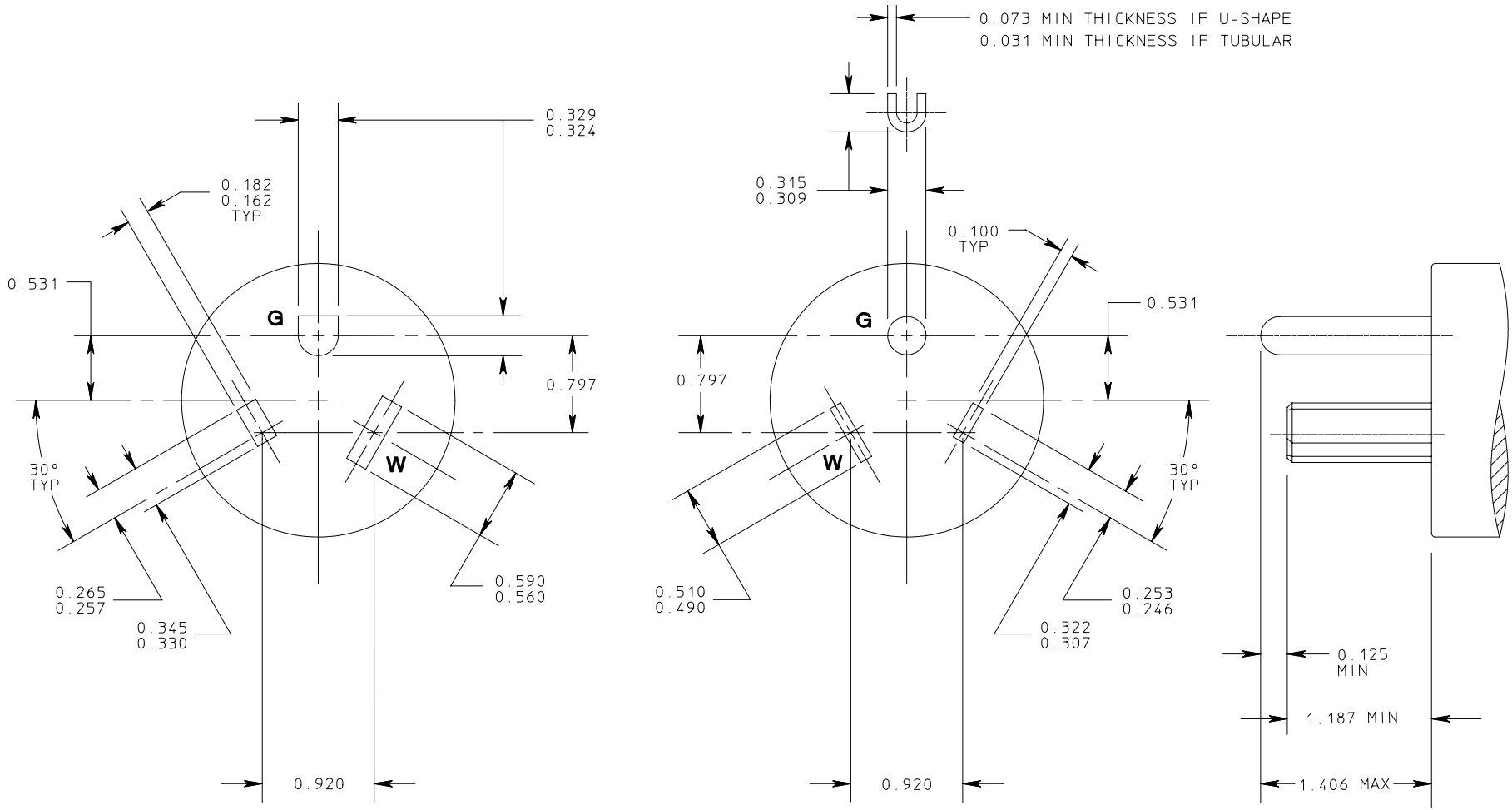

RECEPTACLE

PLUG

FIGURE 7–50
PLUG AND RECEPTACLE
277 volts ac, 50 amperes, 2 pole, 3 wire, Grounding type

© Copyright 2002 by the National Electrical Manufacturers Association.

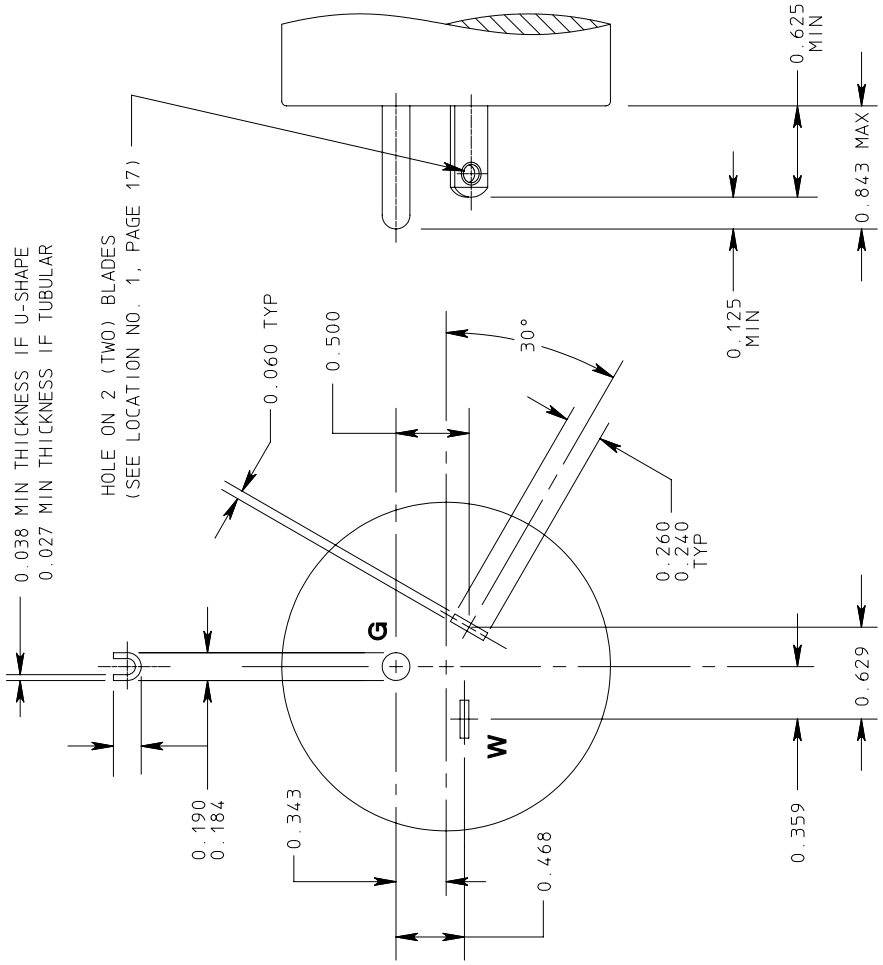

PLUG

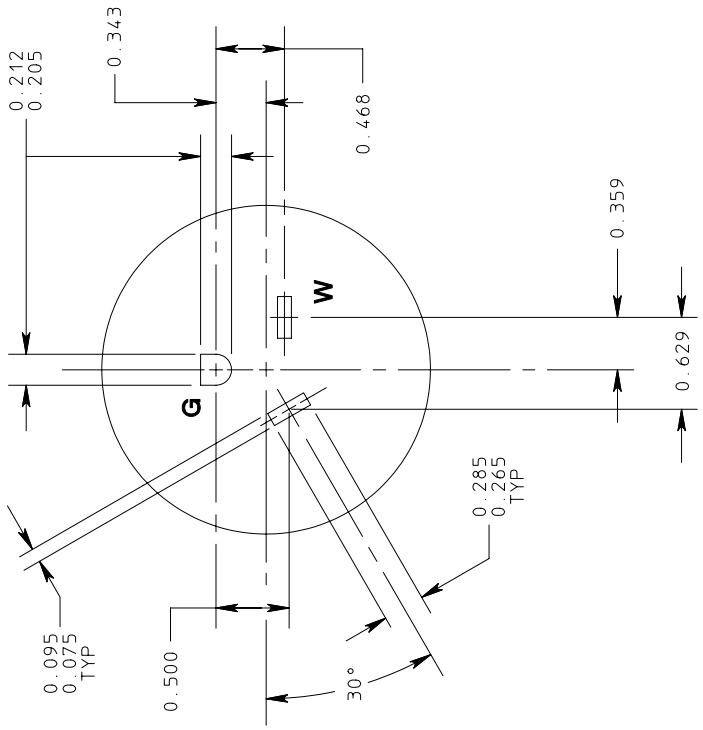

RECEPTACLE

FIGURE 24–15
PLUG AND RECEPTACLE
347 volts ac, 15 amperes, 2 pole, 3 wire, Grounding type

© Copyright 2002 by the National Electrical Manufacturers Association.

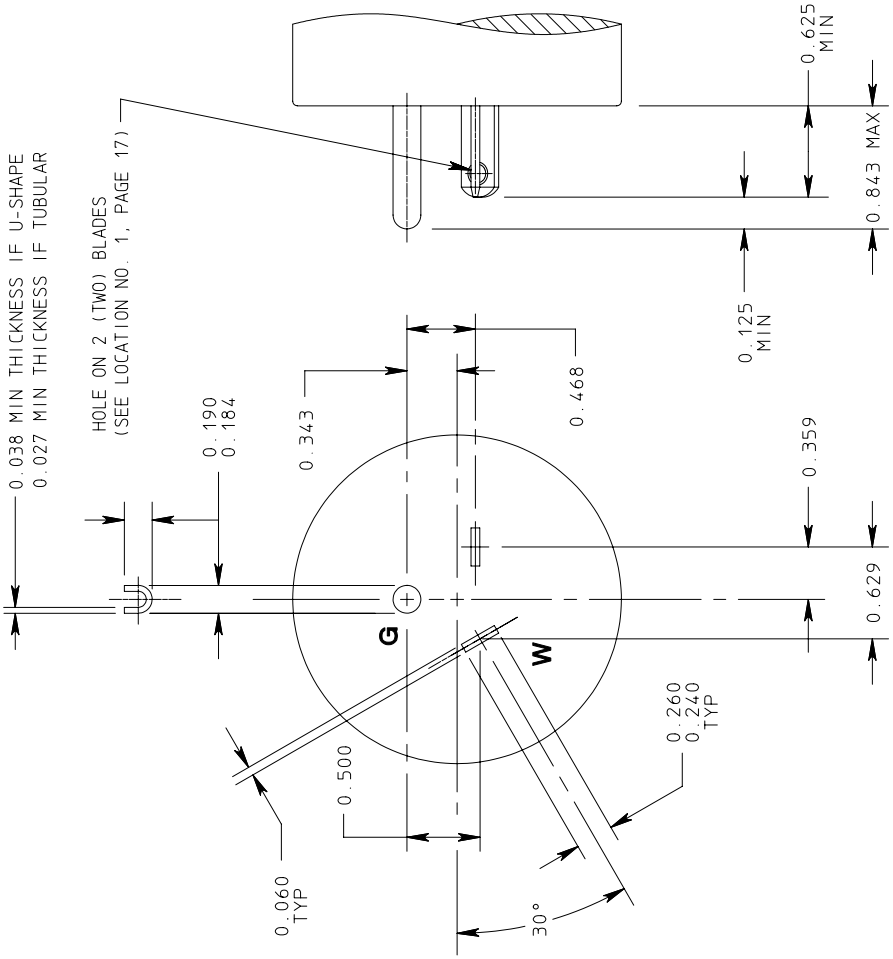

PLUG

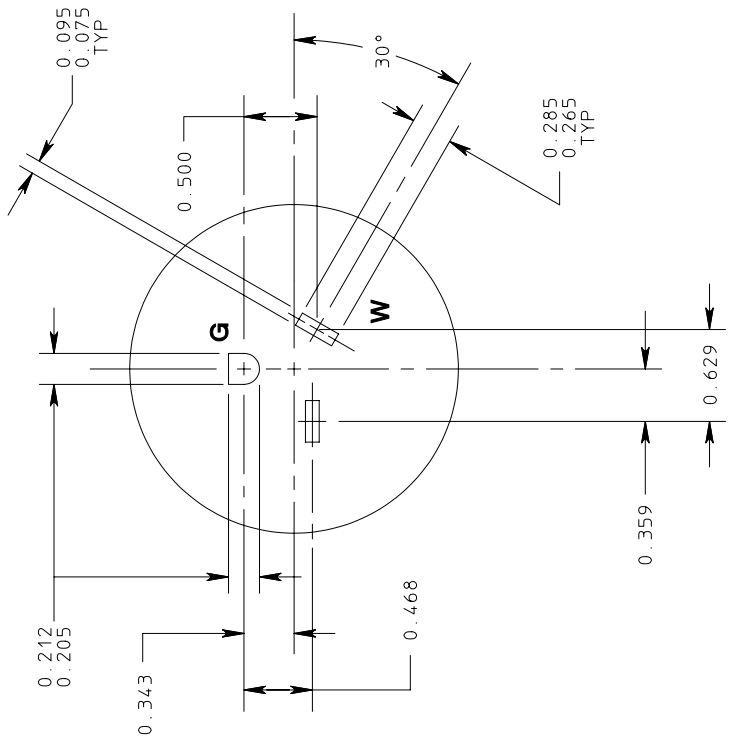

RECEPTACLE

FIGURE 24–20
PLUG AND RECEPTACLE
347 volts ac, 20 amperes, 2 pole, 3 wire grounding type

© Copyright 2002 by the National Electrical Manufacturers Association.

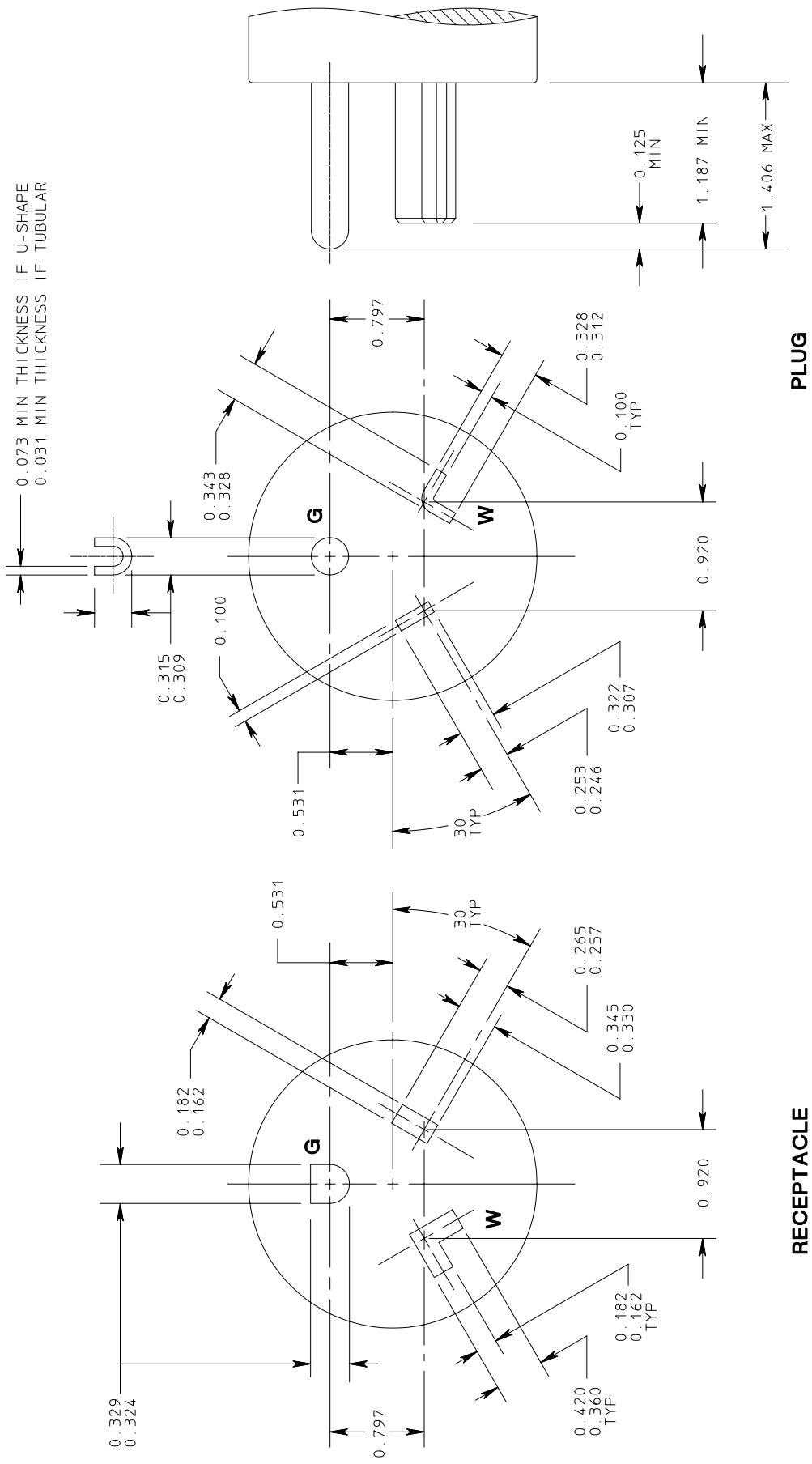

FIGURE 24–30
PLUG AND RECEPTACLE
347 volts ac, 30 amperes, 2 pole, 3 wire, Grounding type

© Copyright 2002 by the National Electrical Manufacturers Association.

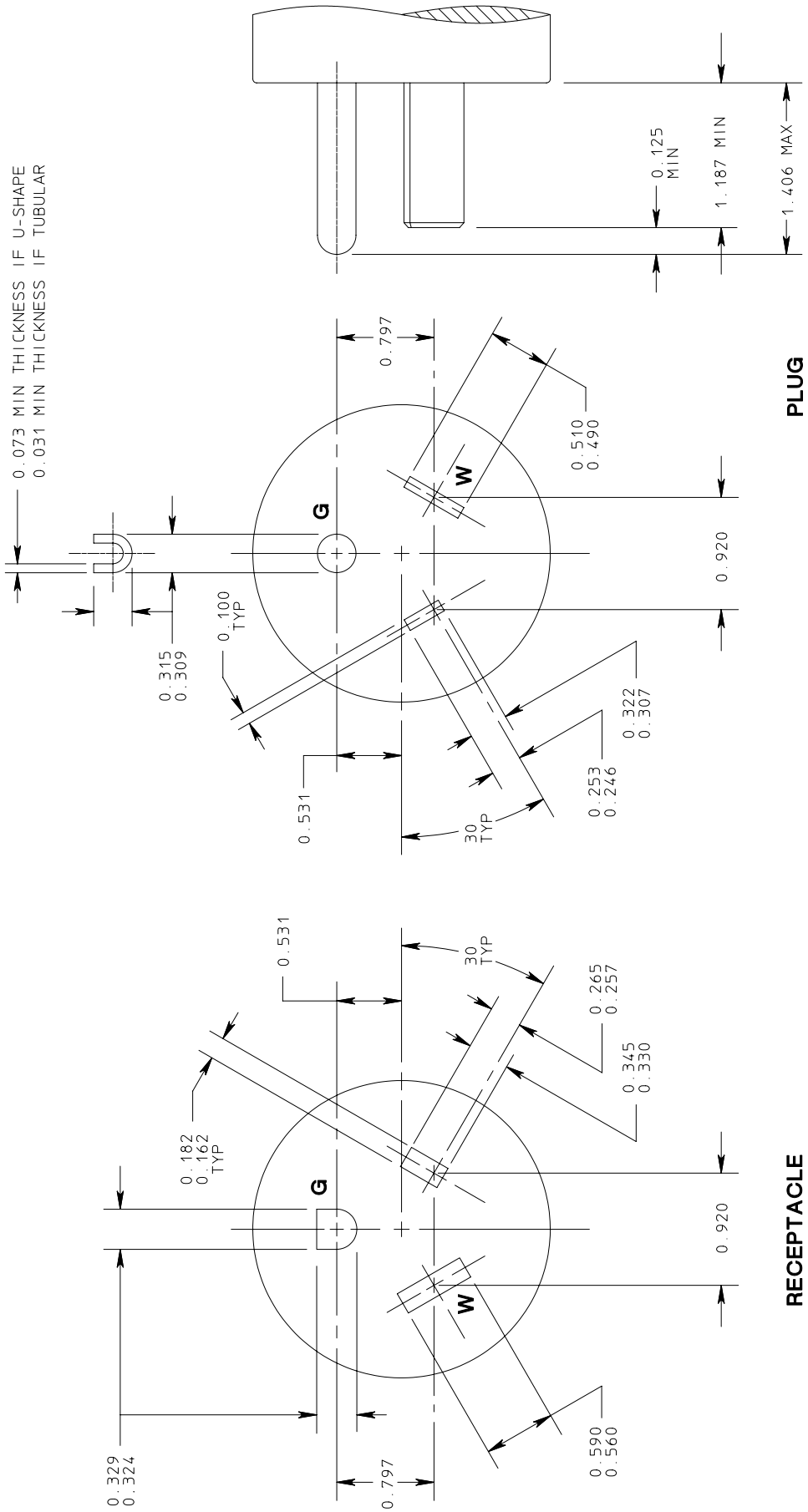

FIGURE 24–50
PLUG AND RECEPTACLE
347 volts ac, 50 amperes, 2 pole, 3 wire, Grounding type

© Copyright 2002 by the National Electrical Manufacturers Association.

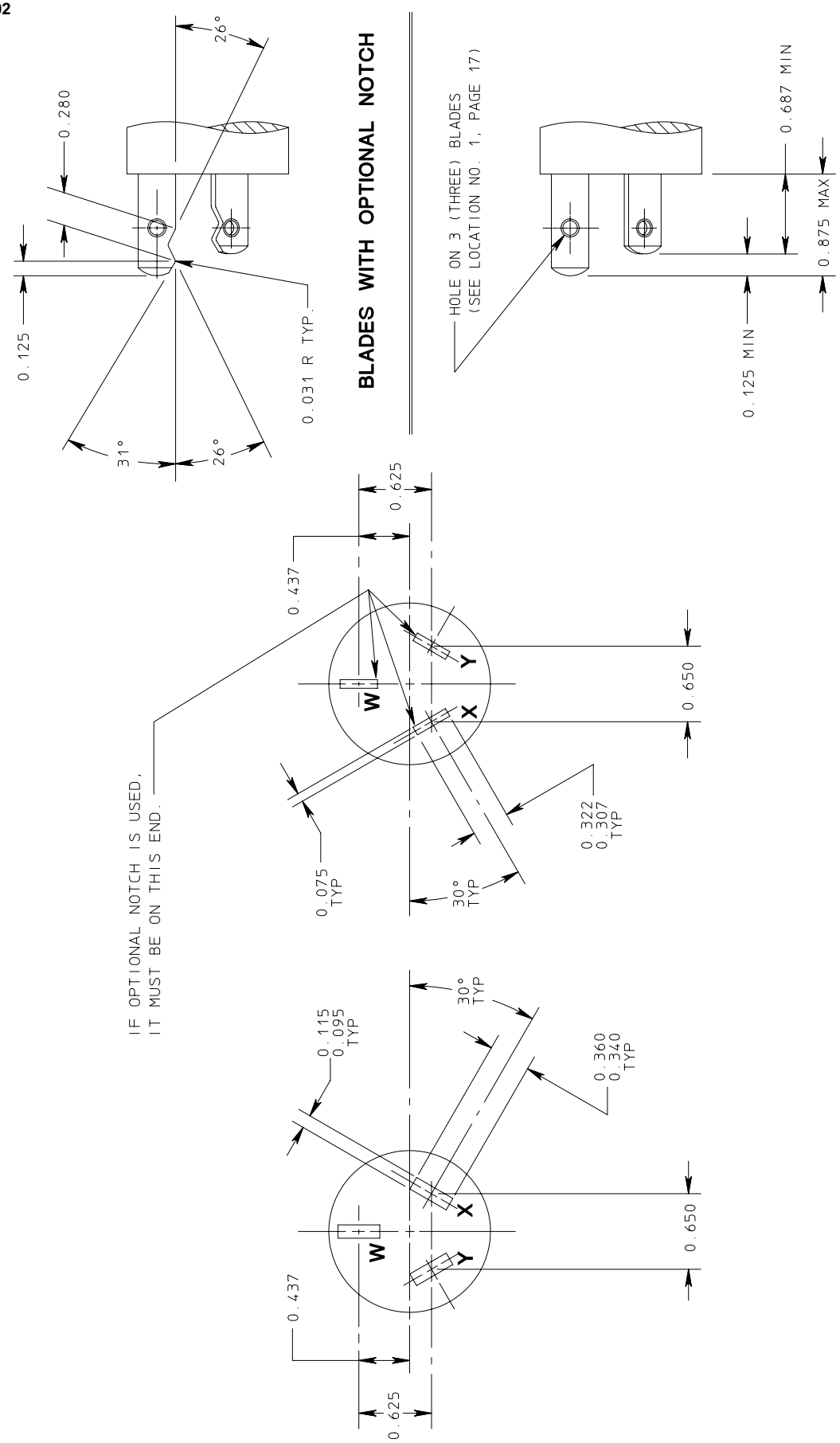

FIGURE 10–20
PLUG AND RECEPTACLE
125/250 volts, 20 amperes, 3 pole, 3 wire

© Copyright 2002 by the National Electrical Manufacturers Association.

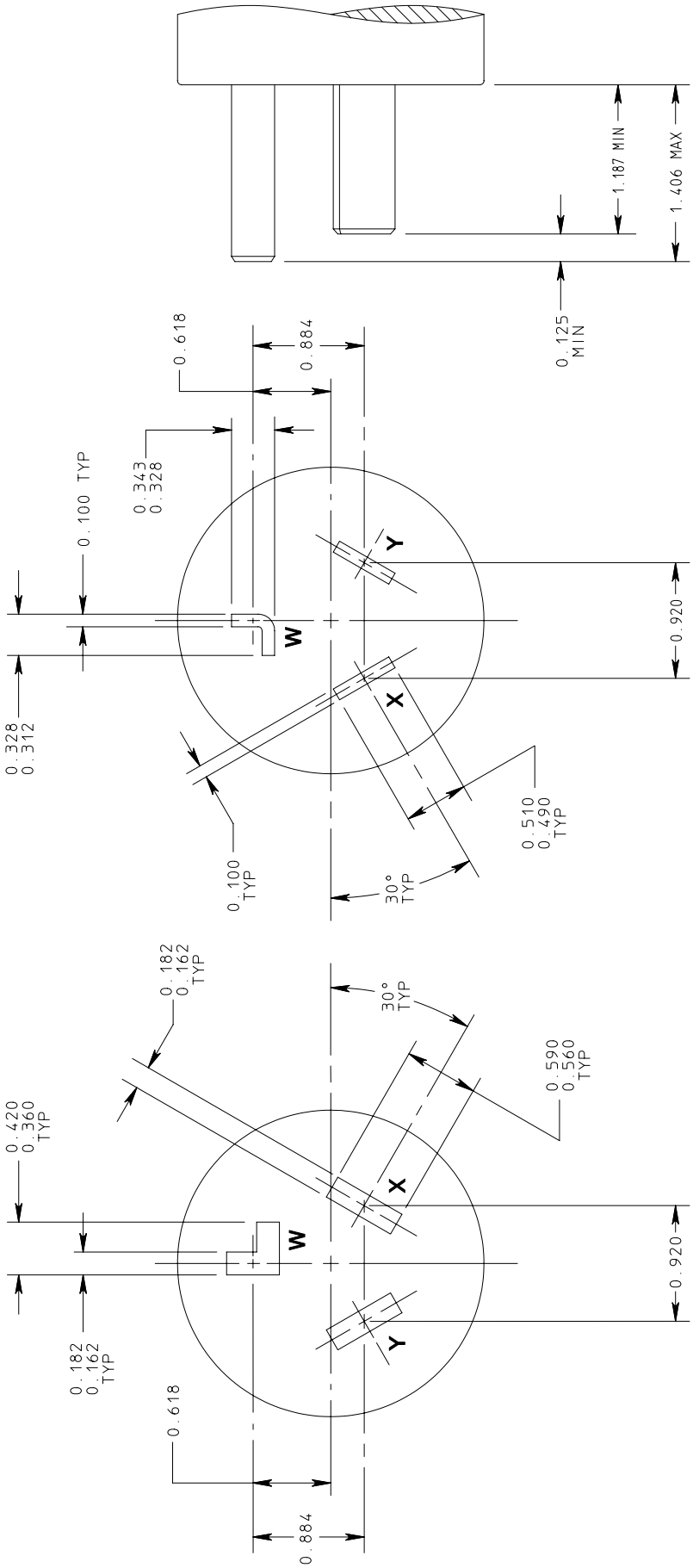

FIGURE 10–30
PLUG AND RECEPTACLE
125/250 volts, 30 amperes, 3 pole, 3 wire

© Copyright 2002 by the National Electrical Manufacturers Association.

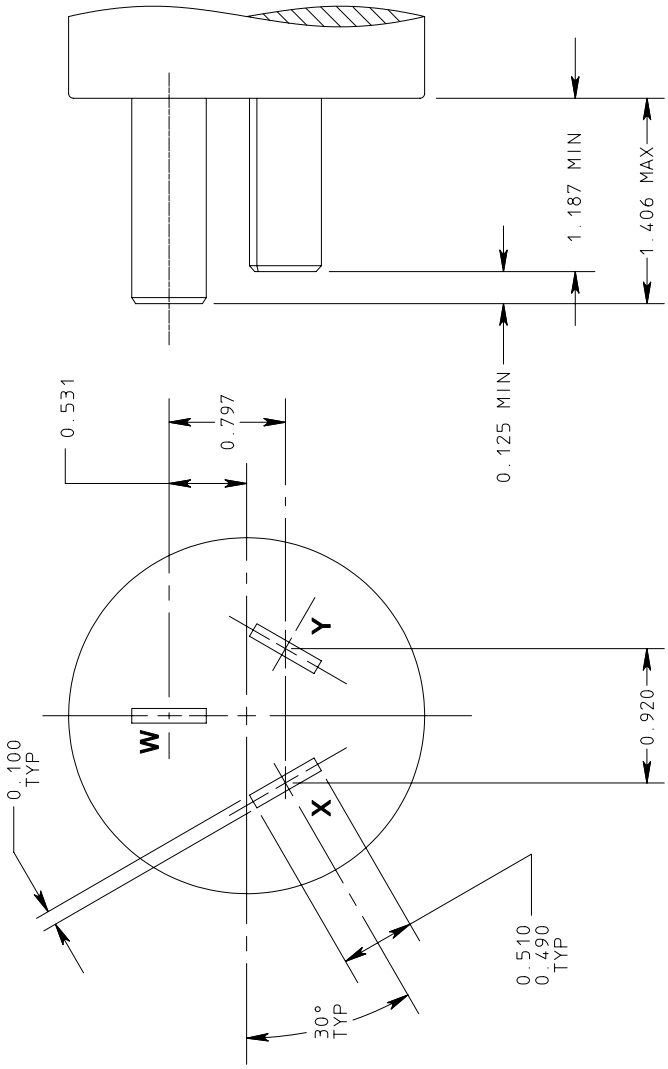

PLUG

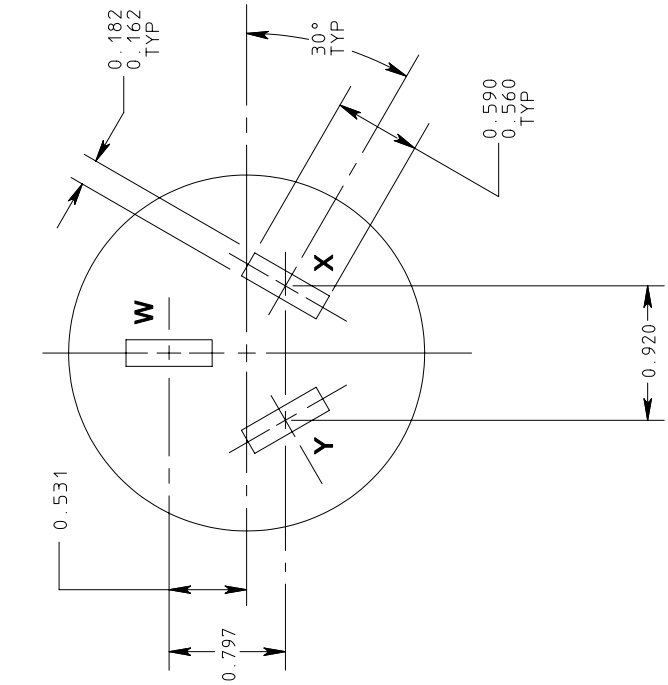

RECEPTACLE

FIGURE 10–50
PLUG AND RECEPTACLE
125/250 volts, 50 amperes, 3 pole, 3 wire

© Copyright 2002 by the National Electrical Manufacturers Association.

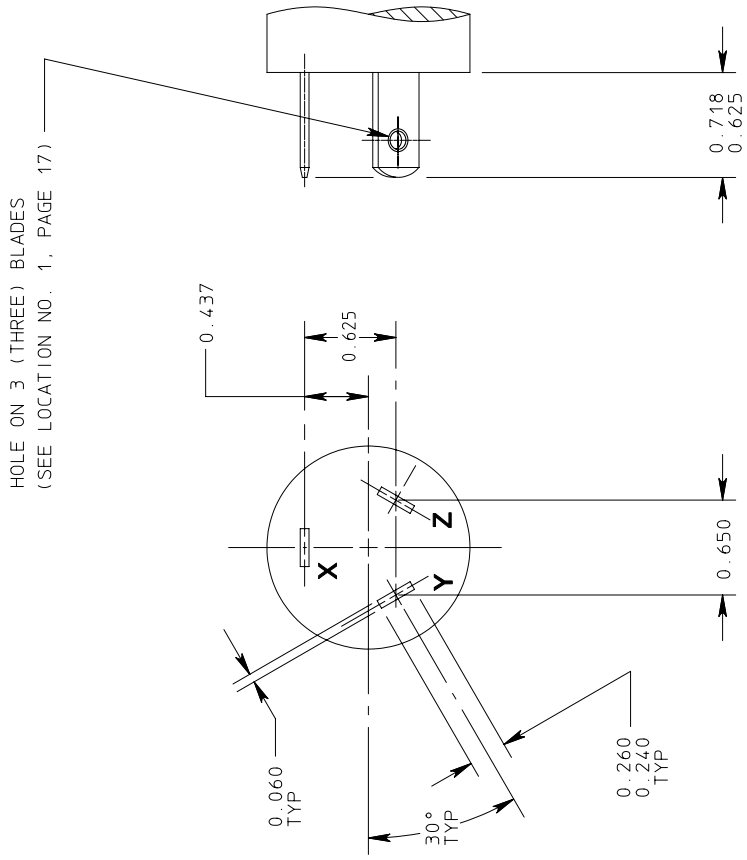

PLUG

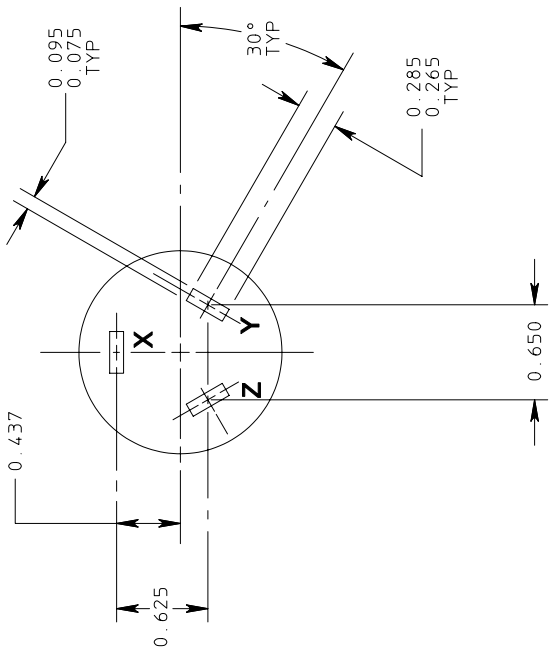

RECEPTACLE

FIGURE 11–15
PLUG AND RECEPTACLE
250 volts, 15 amperes, 3 phase, 3 pole, 3 wire

© Copyright 2002 by the National Electrical Manufacturers Association.

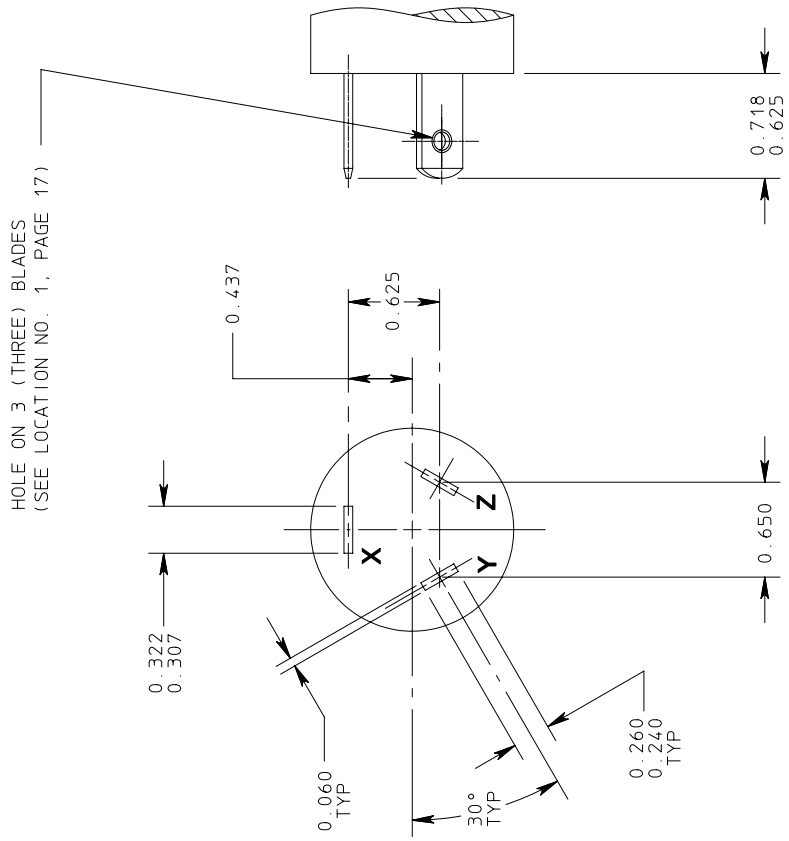

PLUG

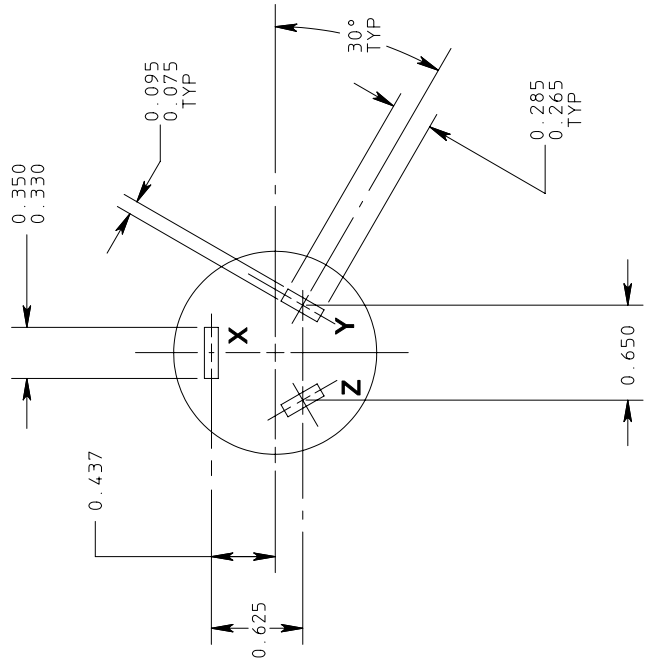

RECEPTACLE

FIGURE 11–20
PLUG AND RECEPTACLE
250 volts, 20 amperes, 3 phase, 3 pole, 3 wire

© Copyright 2002 by the National Electrical Manufacturers Association.

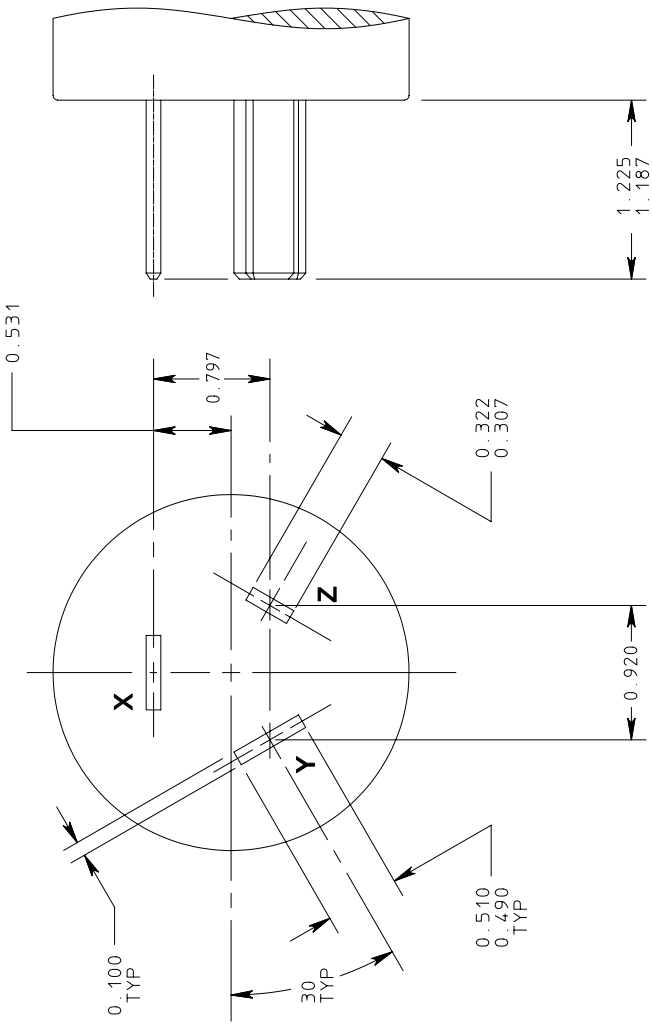

PLUG

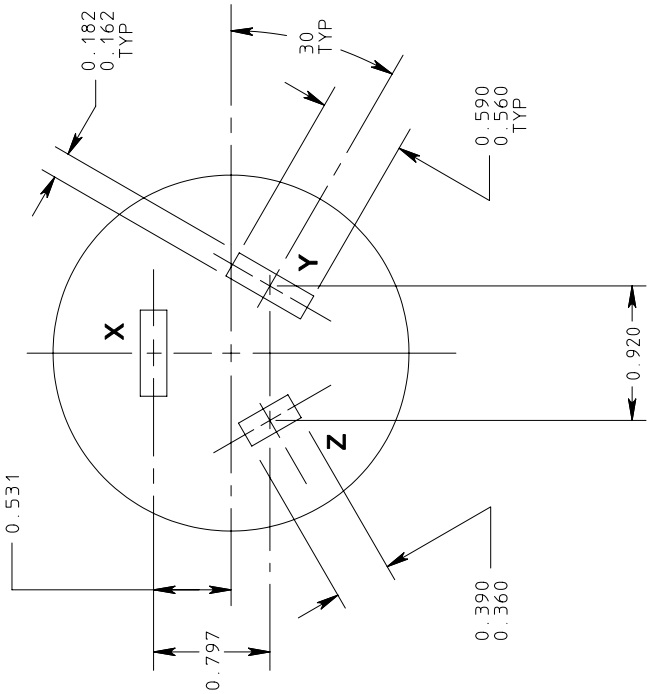

RECEPTACLE

FIGURE 11–30
PLUG AND RECEPTACLE
250 volts, 30 amperes, 3 phase, 3 pole, 3 wire

© Copyright 2002 by the National Electrical Manufacturers Association.

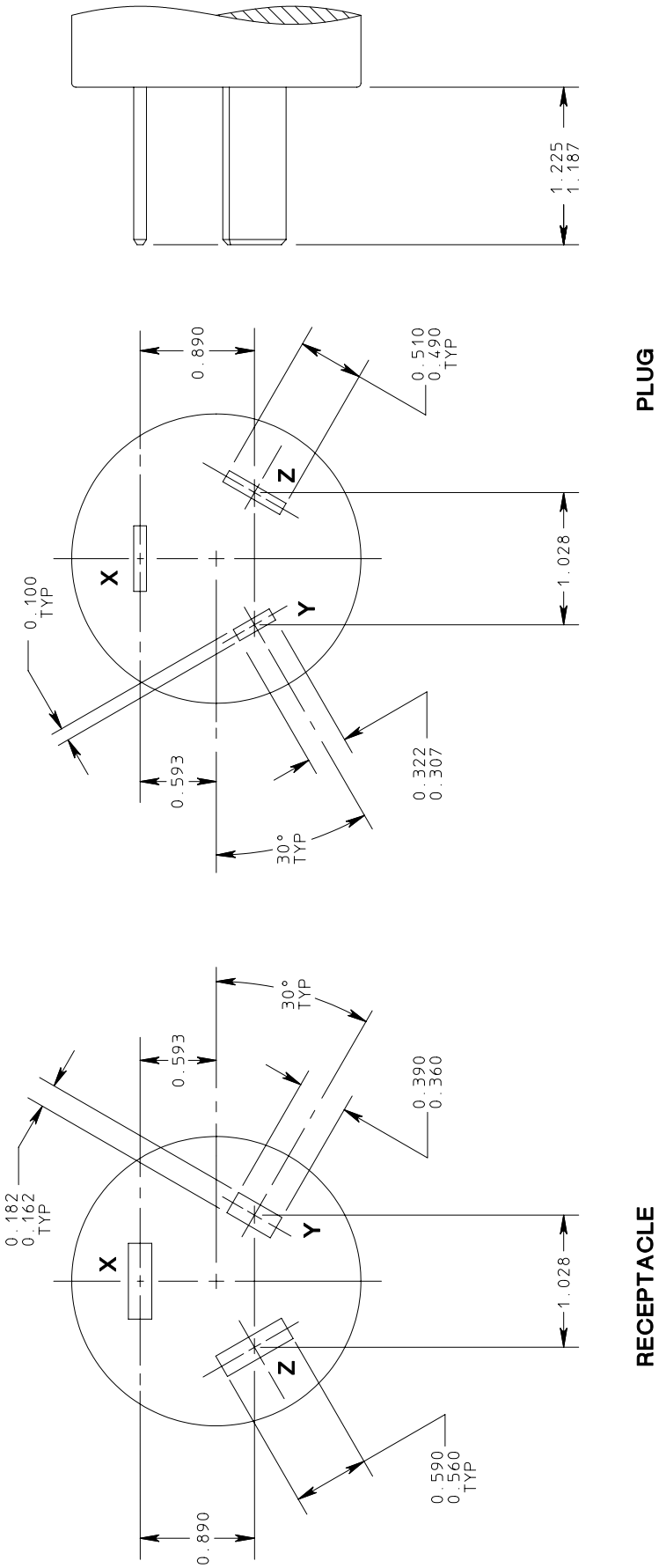

FIGURE 11–50
PLUG AND RECEPTACLE
250 volts, 50 amperes, 3 phase, 3 pole, 3 wire

© Copyright 2002 by the National Electrical Manufacturers Association.

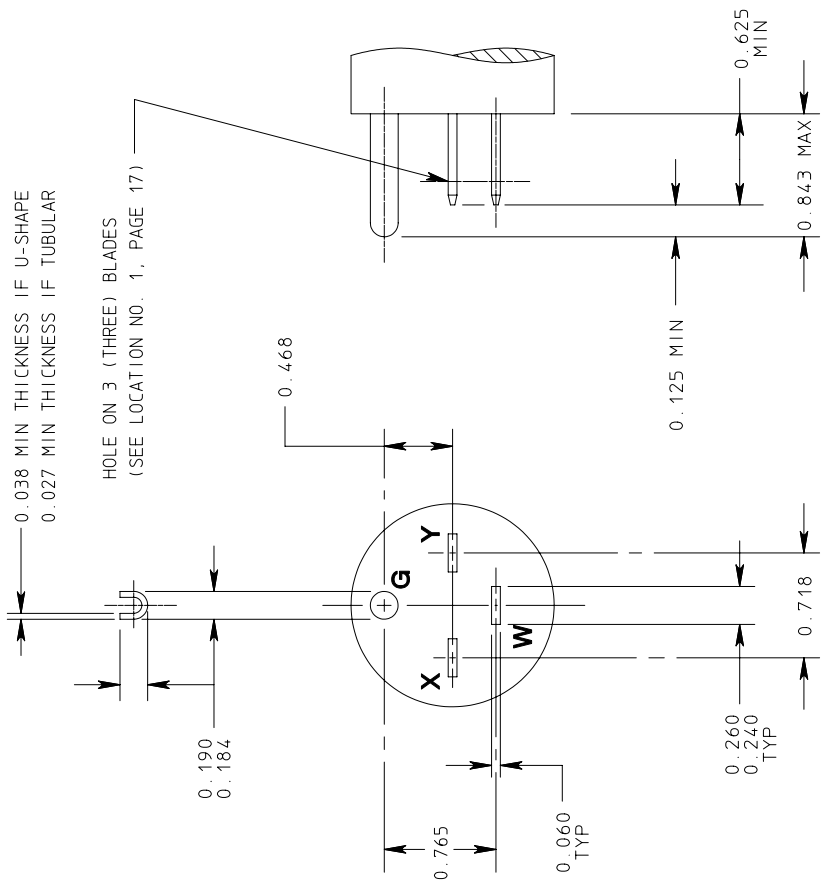

PLUG

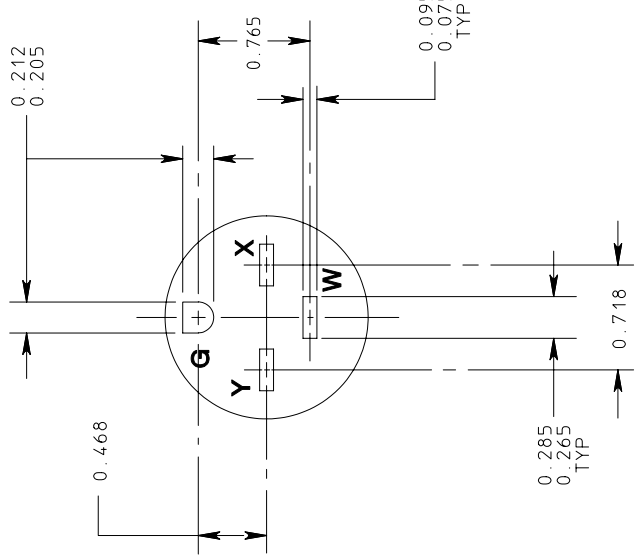

RECEPTACLE

FIGURE 14–15
PLUG AND RECEPTACLE
125/250 volts,15 amperes, 3 pole, 4 wire, Grounding type

© Copyright 2002 by the National Electrical Manufacturers Association.

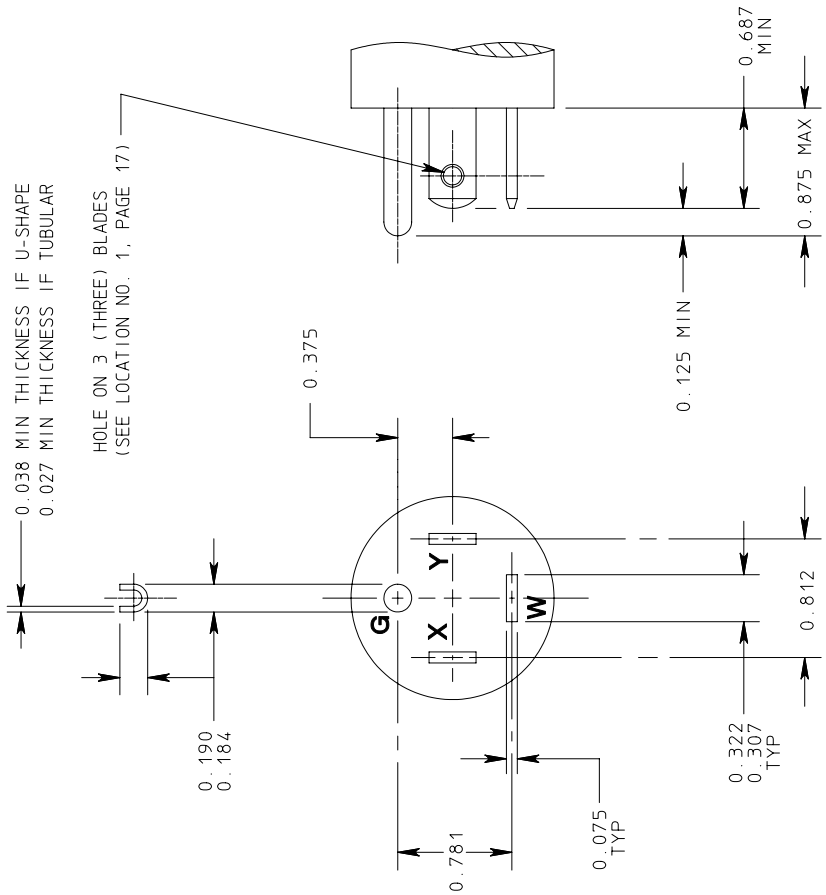

PLUG

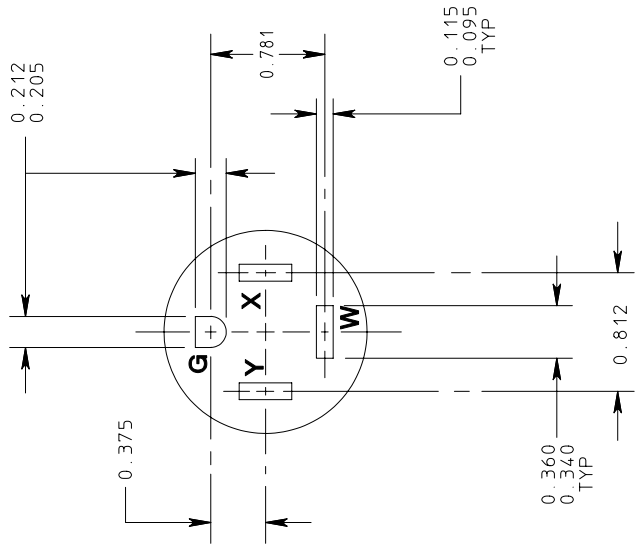

RECEPTACLE

FIGURE 14–20
PLUG AND RECEPTACLE
125/250 volts, 20 amperes, 3 pole, 4 wire, Grounding type

© Copyright 2002 by the National Electrical Manufacturers Association.

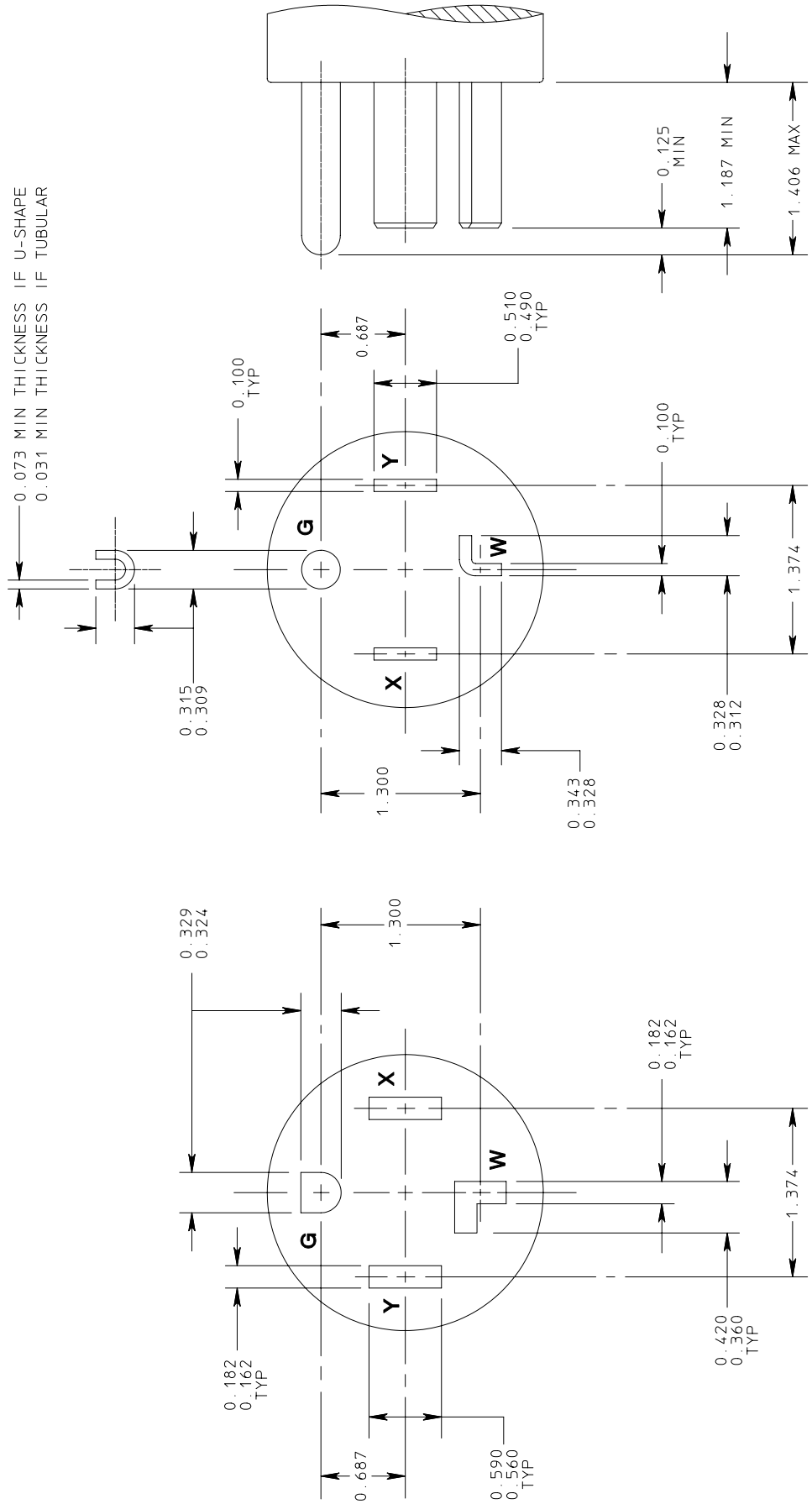

FIGURE 14–30
PLUG AND RECEPTACLE
125/250 volts, 30 amperes, 3 pole, 4 wire, Grounding type

© Copyright 2002 by the National Electrical Manufacturers Association.

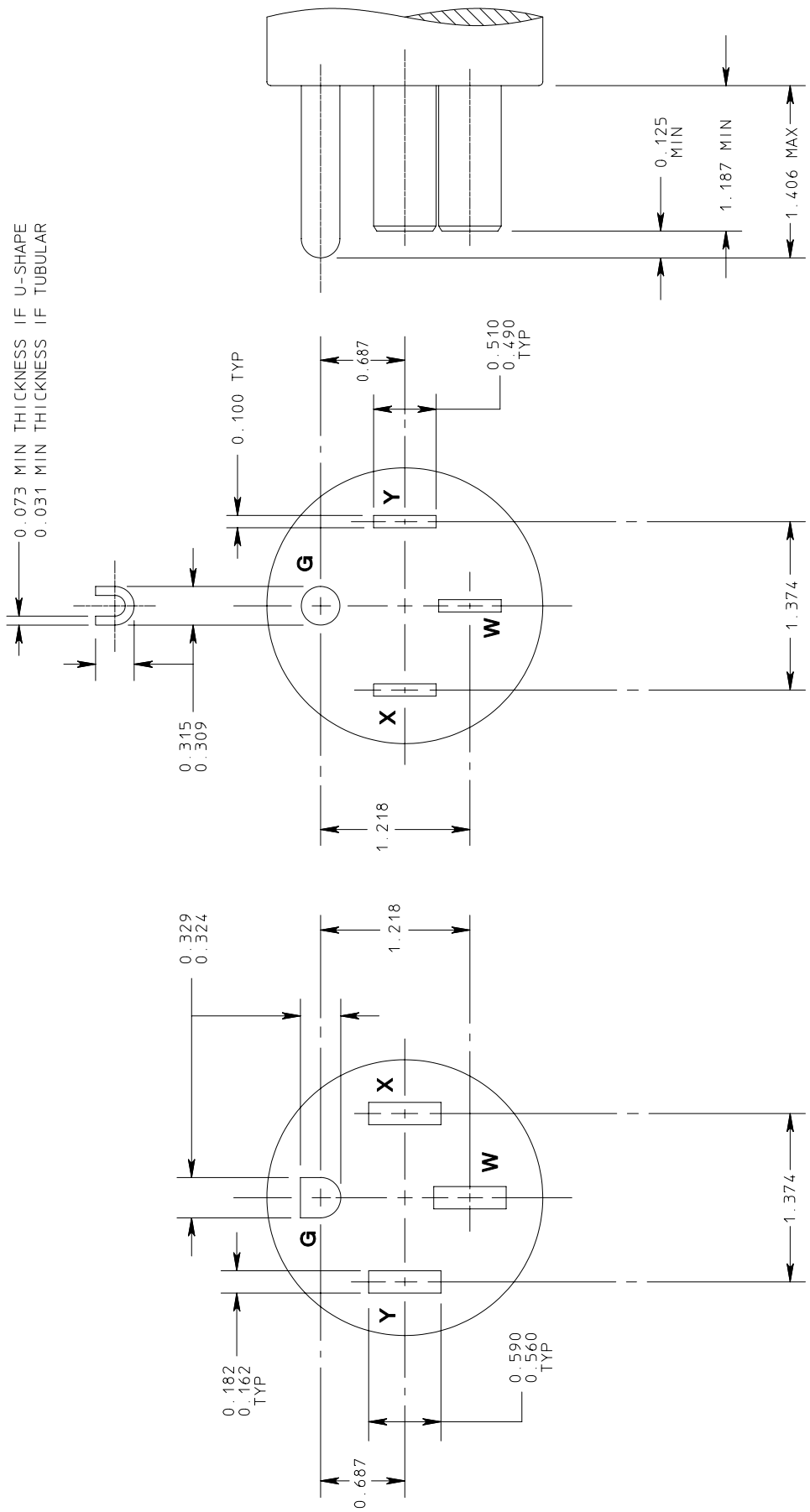

FIGURE 14–50
PLUG AND RECEPTACLE
125/250 volts, 50 amperes, 3 pole, 4 wire, Grounding type

© Copyright 2002 by the National Electrical Manufacturers Association.

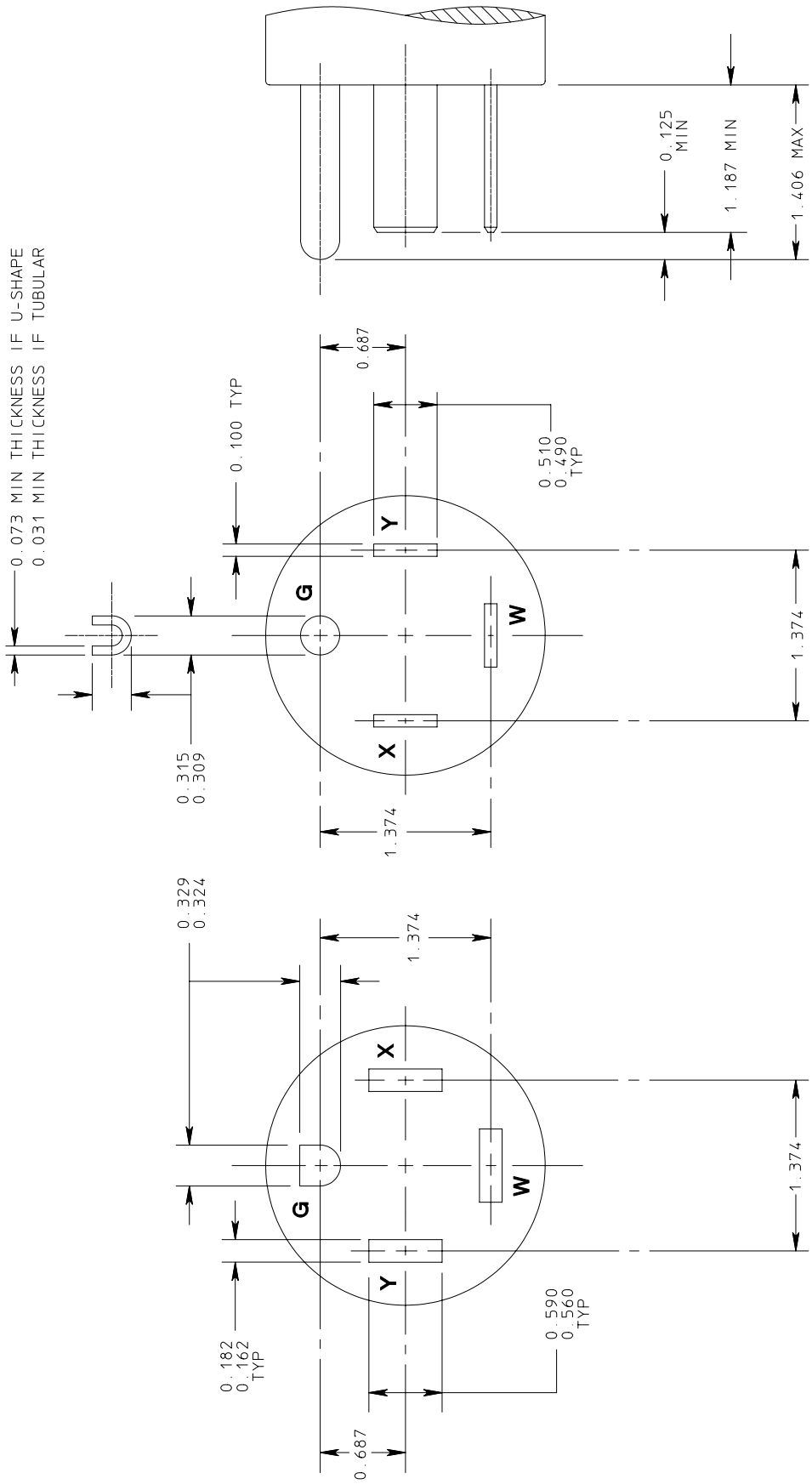

FIGURE 14–60
PLUG AND RECEPTACLE
125/250 volts, 60 amperes, 3 pole, 4 wire, Grounding type

© Copyright 2002 by the National Electrical Manufacturers Association.

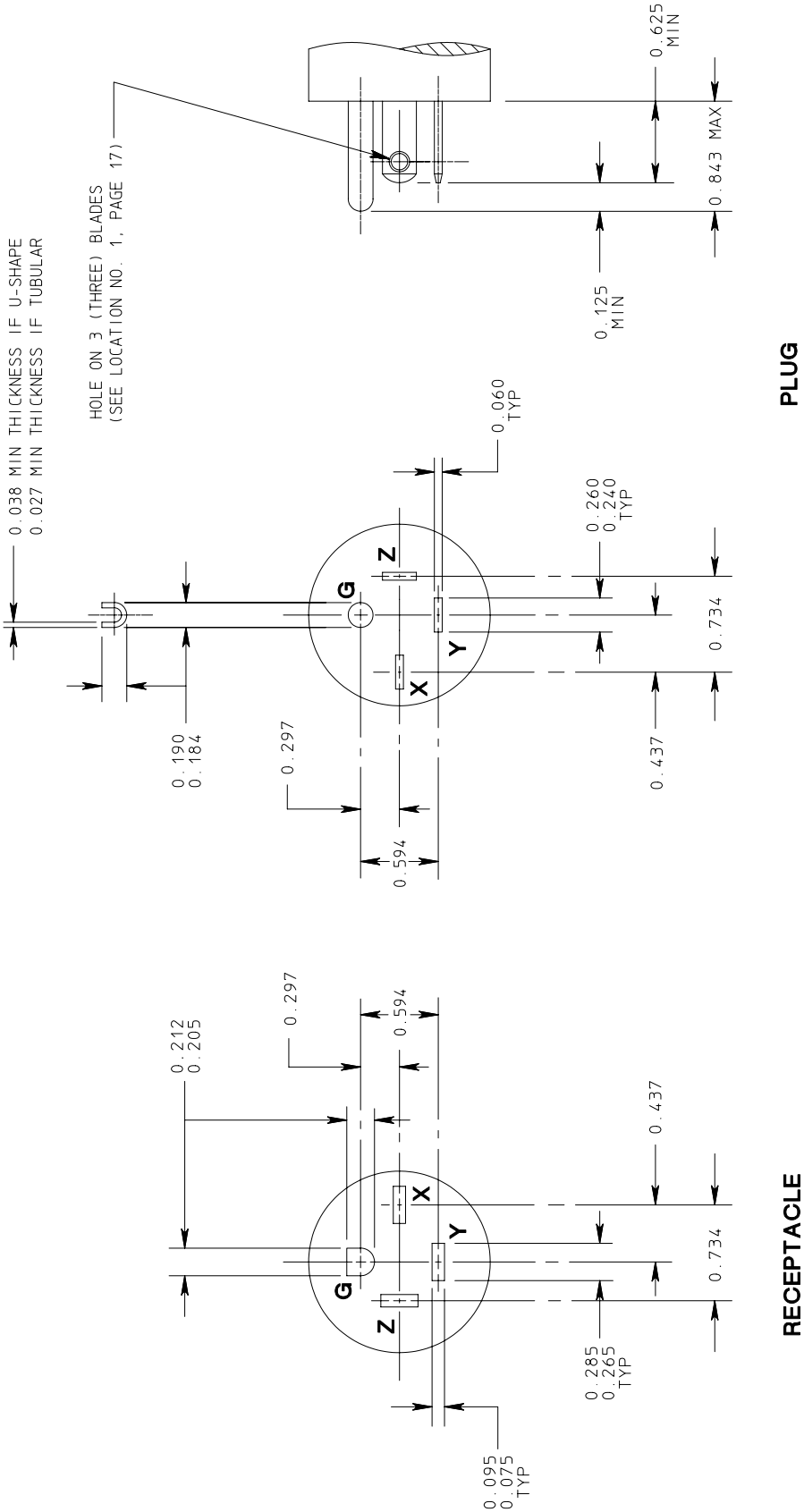

FIGURE 15–15
PLUG AND RECEPTACLE
250 volts, 15 amperes, 3 phase, 3 pole, 4 wire, grounding type

© Copyright 2002 by the National Electrical Manufacturers Association.

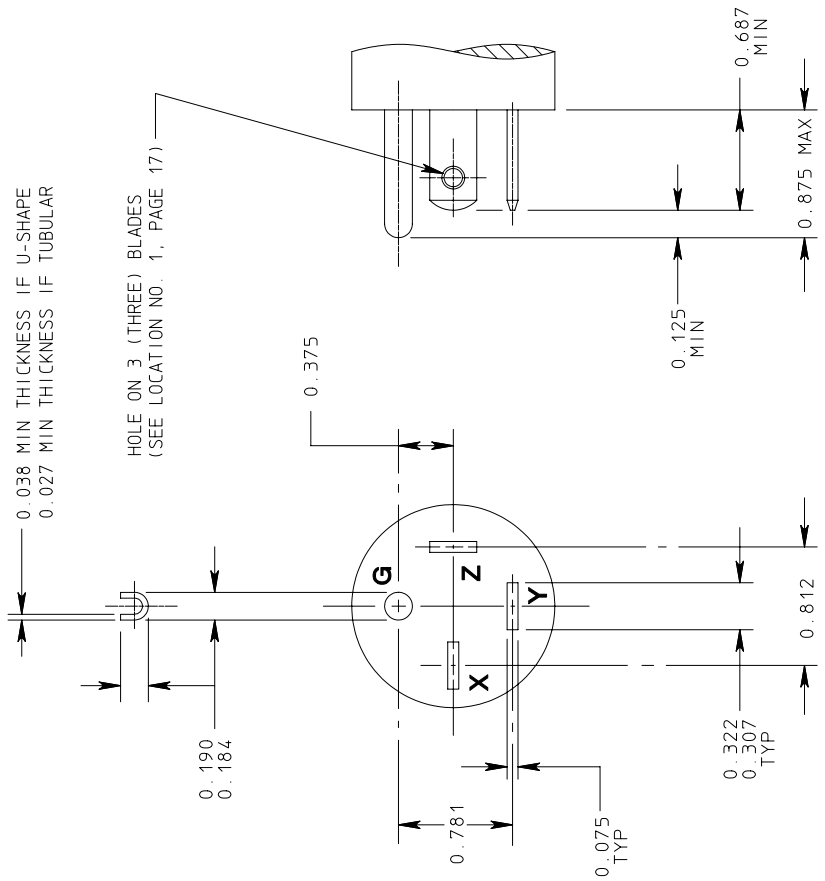

PLUG

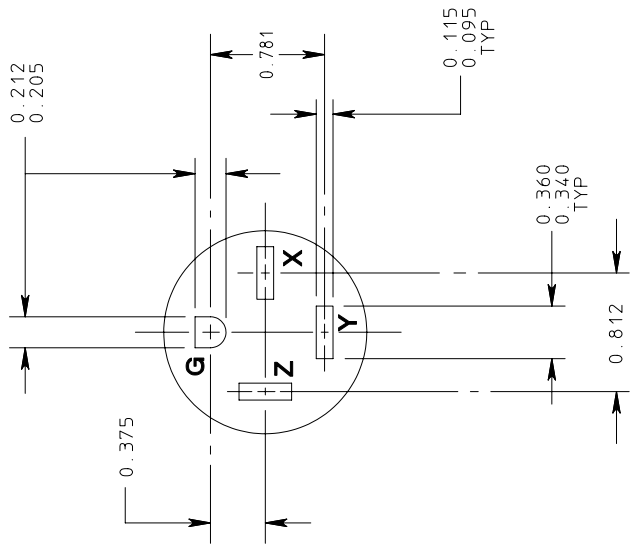

RECEPTACLE

FIGURE 15–20
PLUG AND RECEPTACLE
250 volts, 20 amperes, 3 phase, 3 pole, 4 wire, Grounding type

© Copyright 2002 by the National Electrical Manufacturers Association.

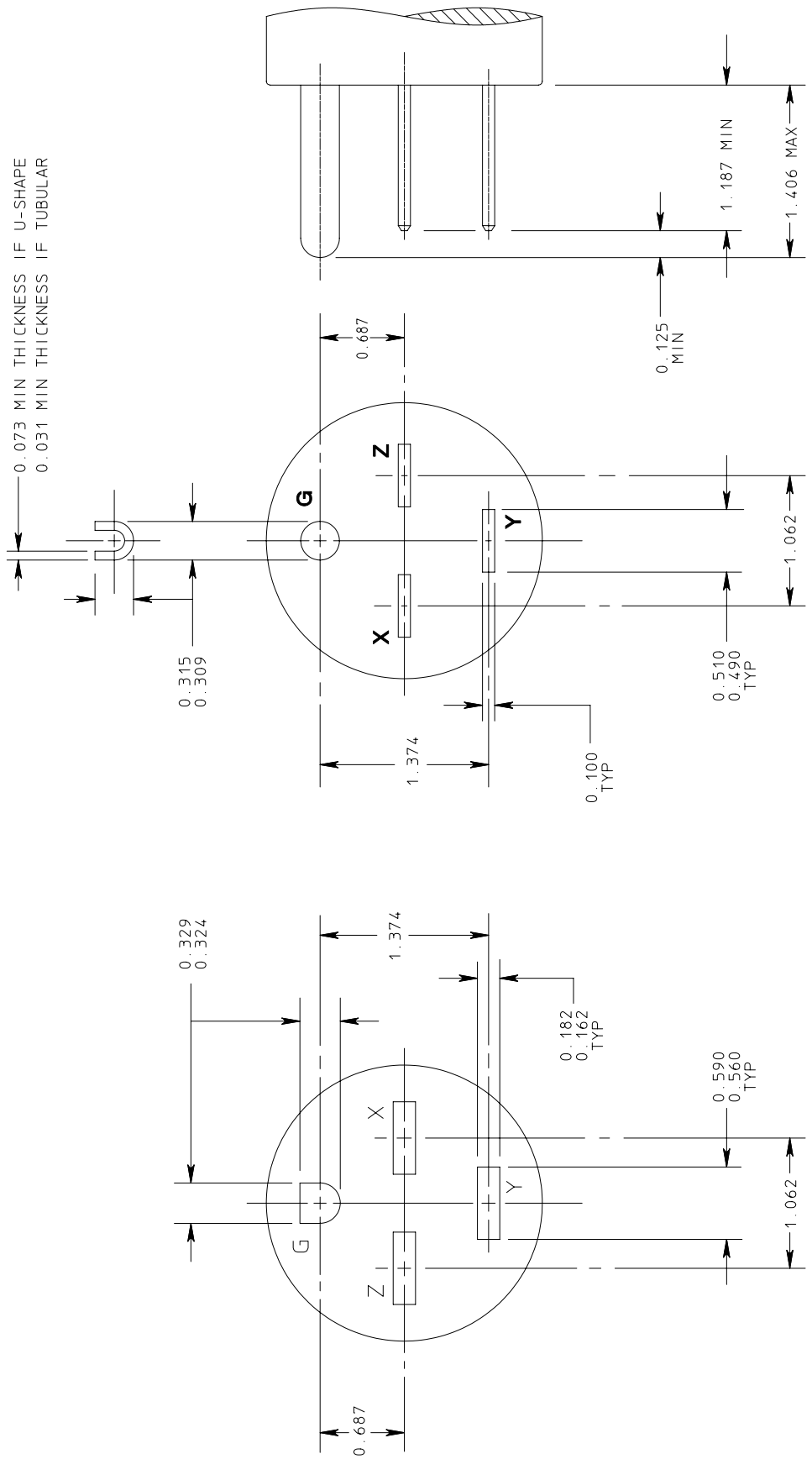

FIGURE 15–30
PLUG AND RECEPTACLE
250 volts, 30 amperes, 3 phase, 3 pole, 4 wire, Grounding type

© Copyright 2002 by the National Electrical Manufacturers Association.

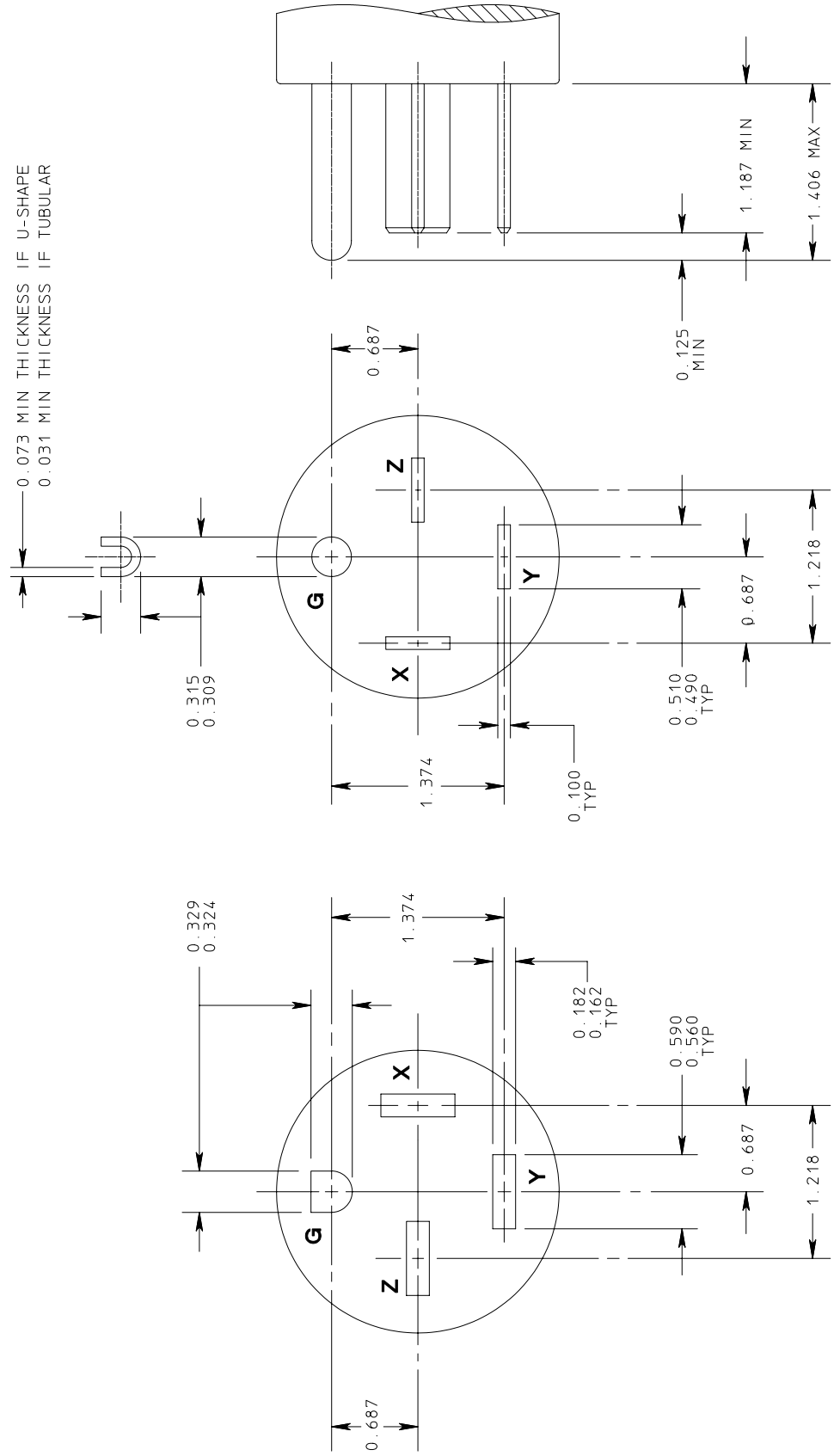

FIGURE 15–50
PLUG AND RECEPTACLE
250 volts, 50 amperes, 3 phase, 3 pole, 4 wire, Grounding type

© Copyright 2002 by the National Electrical Manufacturers Association.

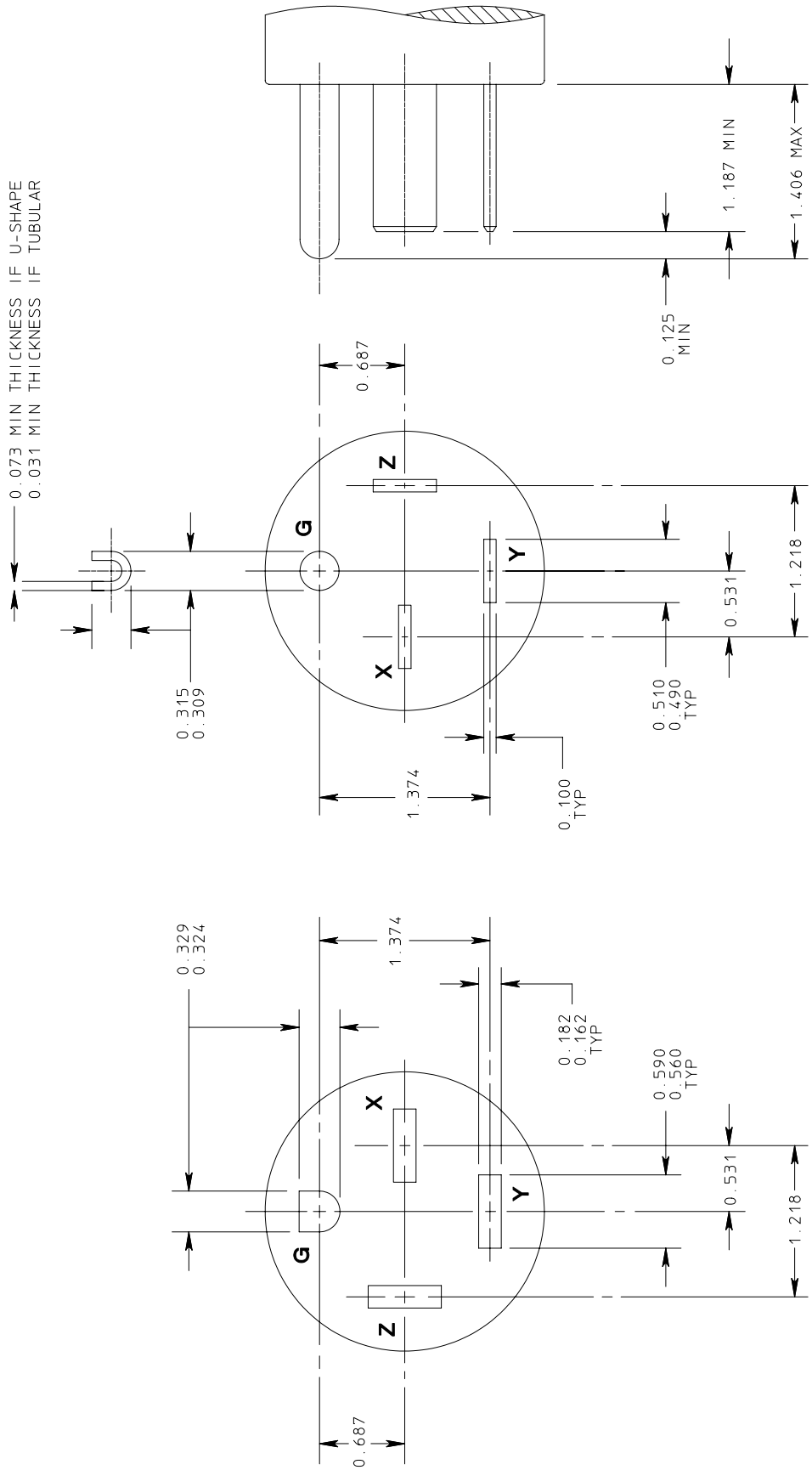

FIGURE 15–60
PLUG AND RECEPTACLE
250 volts, 60 amperes, 3 phase, 3 pole, 4 wire, Grounding type

© Copyright 2002 by the National Electrical Manufacturers Association.

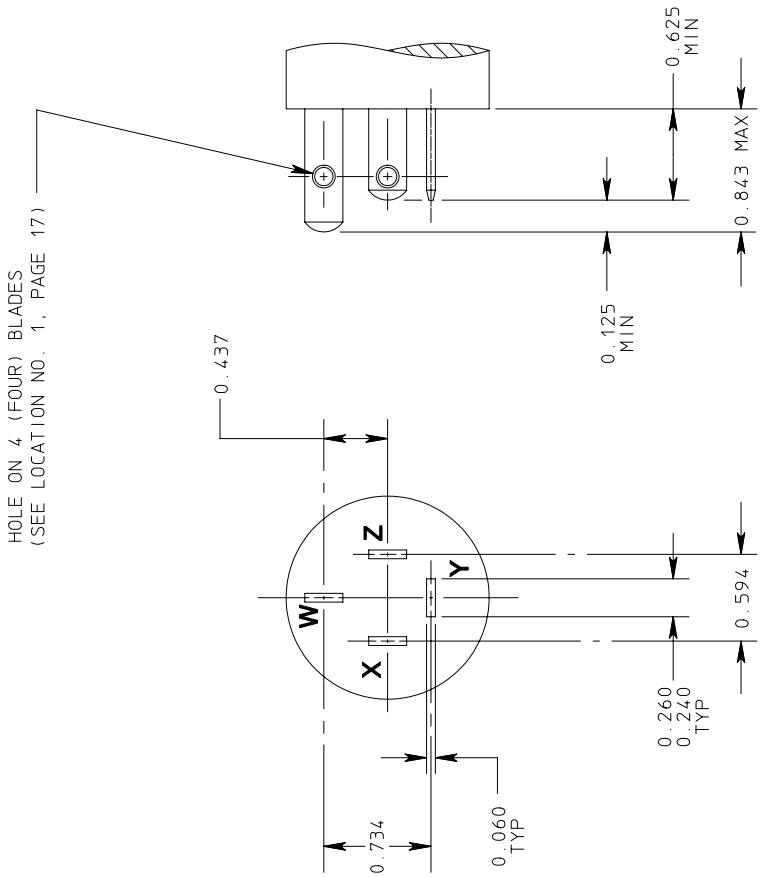

PLUG

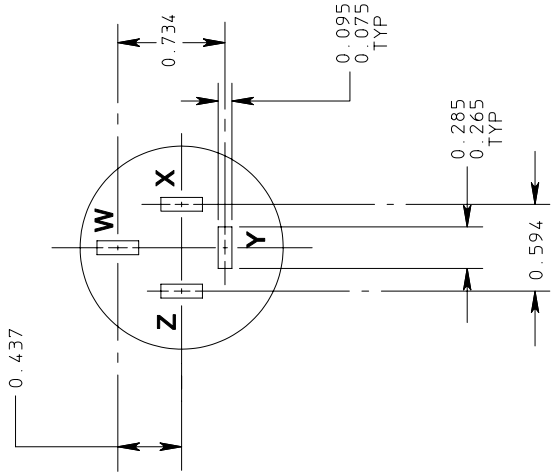

RECEPTACLE

FIGURE 18–15
PLUG AND RECEPTACLE
120/208 volts, 15 amperes, 3 phase Y, 4 pole, 4 wire

© Copyright 2002 by the National Electrical Manufacturers Association.

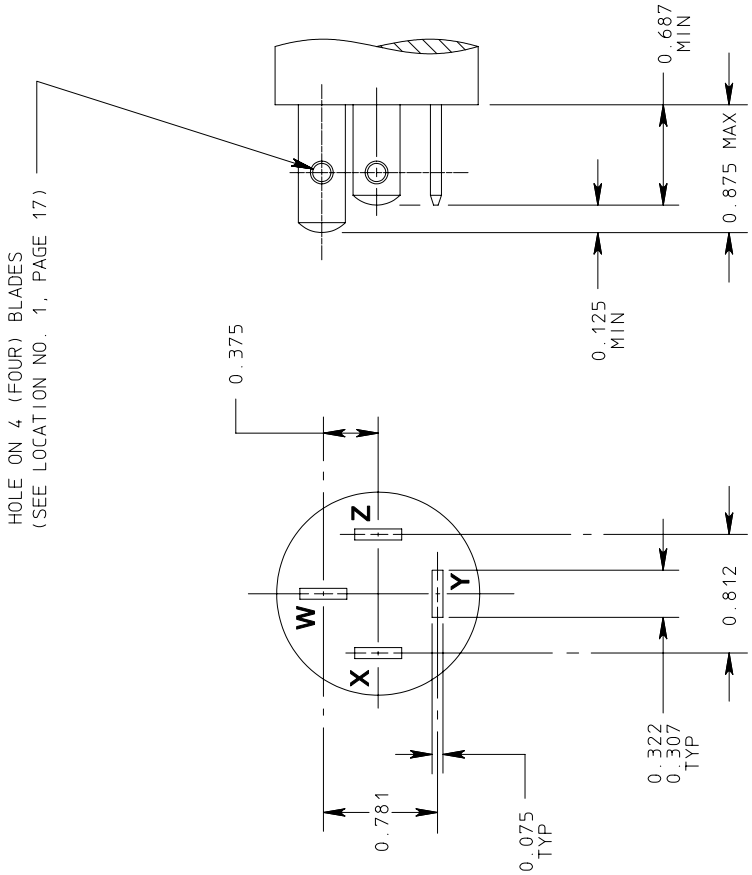

PLUG

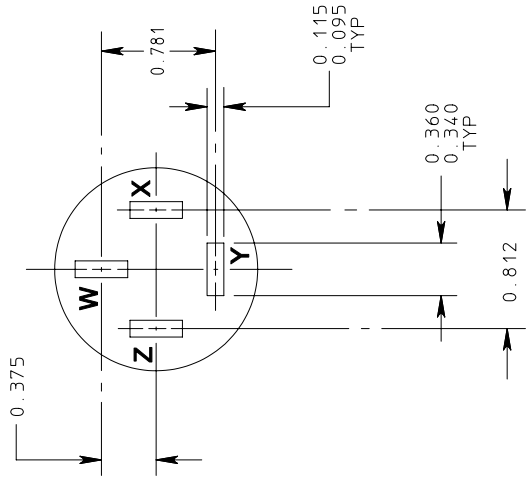

RECEPTACLE

FIGURE 18–20
PLUG AND RECEPTACLE
120/208 volts, 20 amperes, 3 phase Y, 4 pole, 4 wire

© Copyright 2002 by the National Electrical Manufacturers Association.

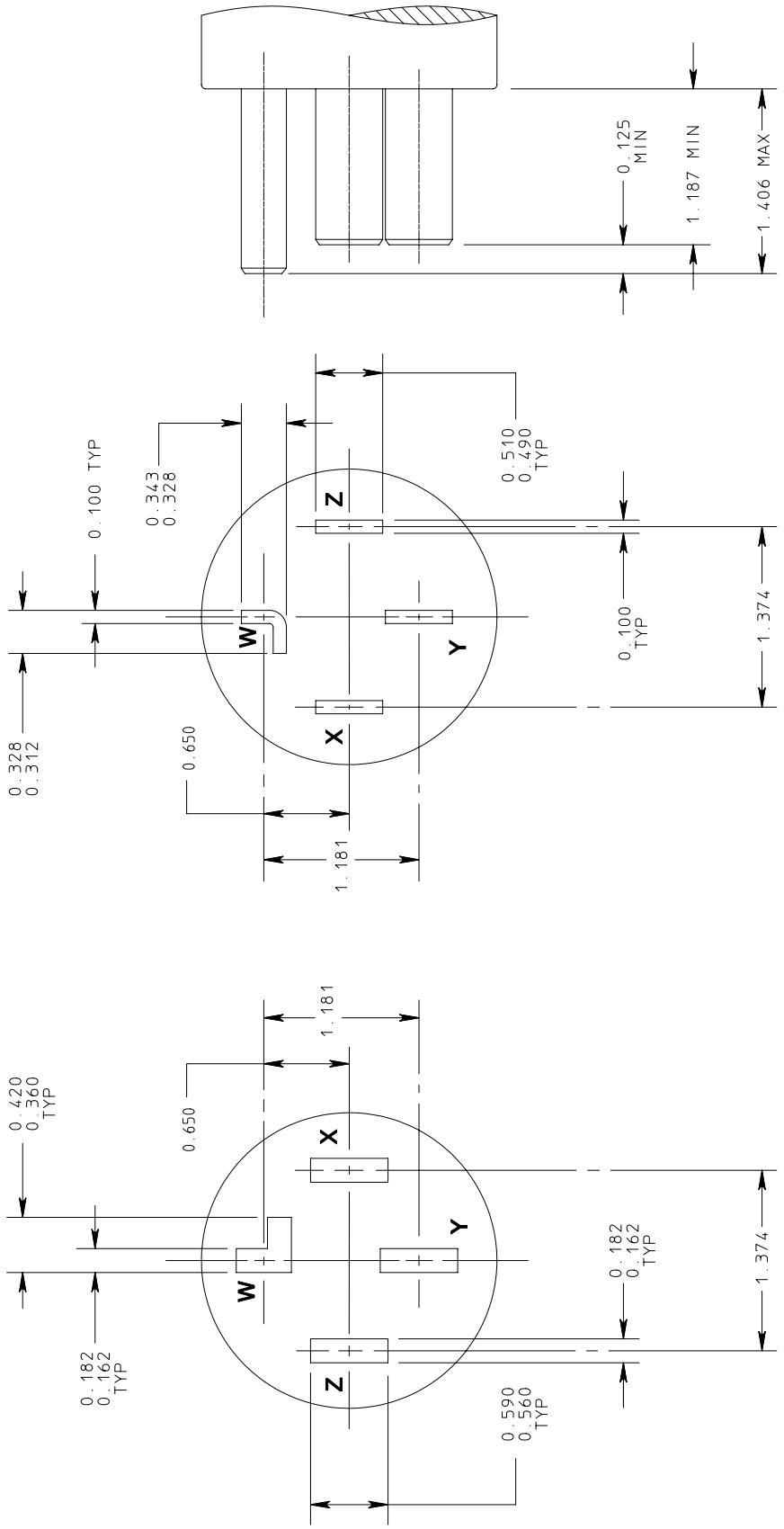

PLUG

RECEPTACLE

FIGURE 18–30
PLUG AND RECEPTACLE
120/208 volts, 30 amperes, 3 phase Y, 4 pole, 4 wire

© Copyright 2002 by the National Electrical Manufacturers Association.

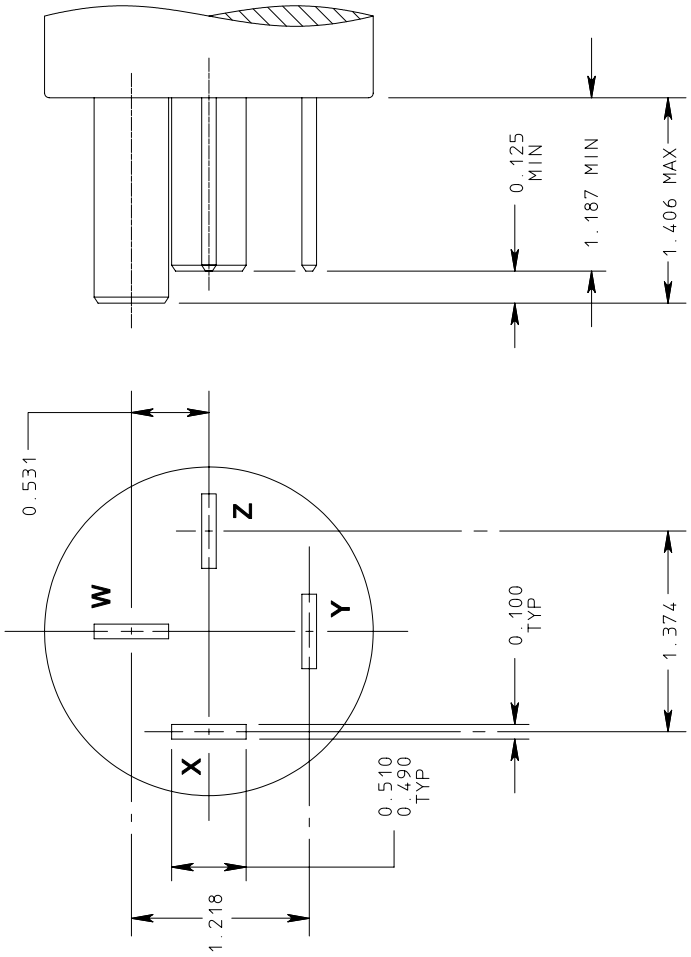

PLUG

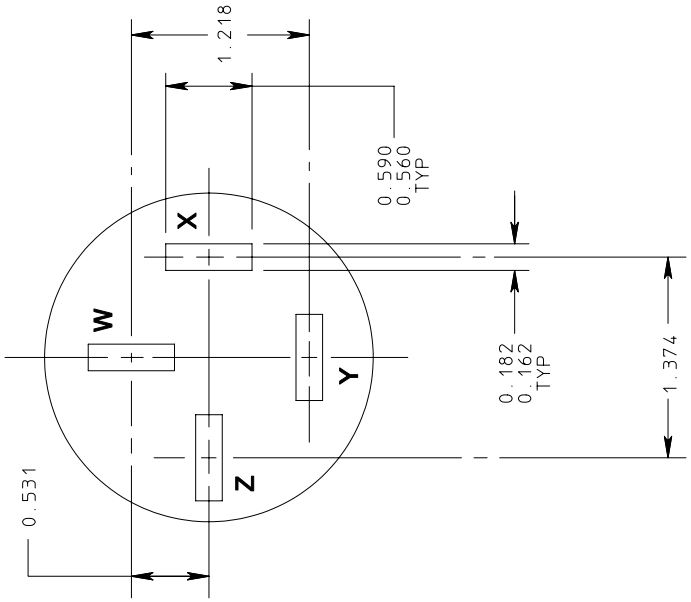

RECEPTACLE

FIGURE 18–50
PLUG AND RECEPTACLE
120/208 volts, 50 amperes, 3 phase Y, 4 pole, 4 wire

© Copyright 2002 by the National Electrical Manufacturers Association.

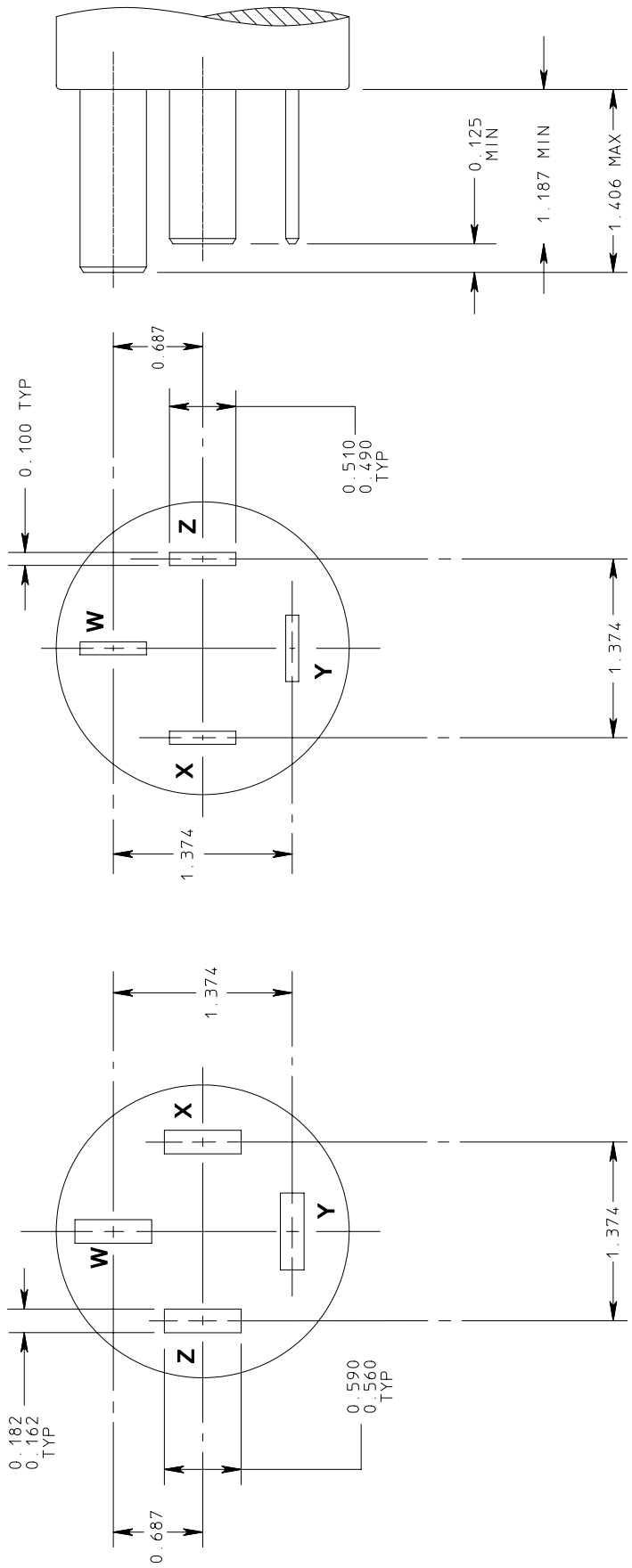

FIGURE 18–60
PLUG AND RECEPTACLE
120/208 volts, 60 amperes, 3 phase Y, 4 pole, 4 wire

© Copyright 2002 by the National Electrical Manufacturers Association.

FIGURE L1–15
LOCKING TYPE PLUG AND RECEPTACLE
125 volts, 15 amperes, 2 pole, 2 wire

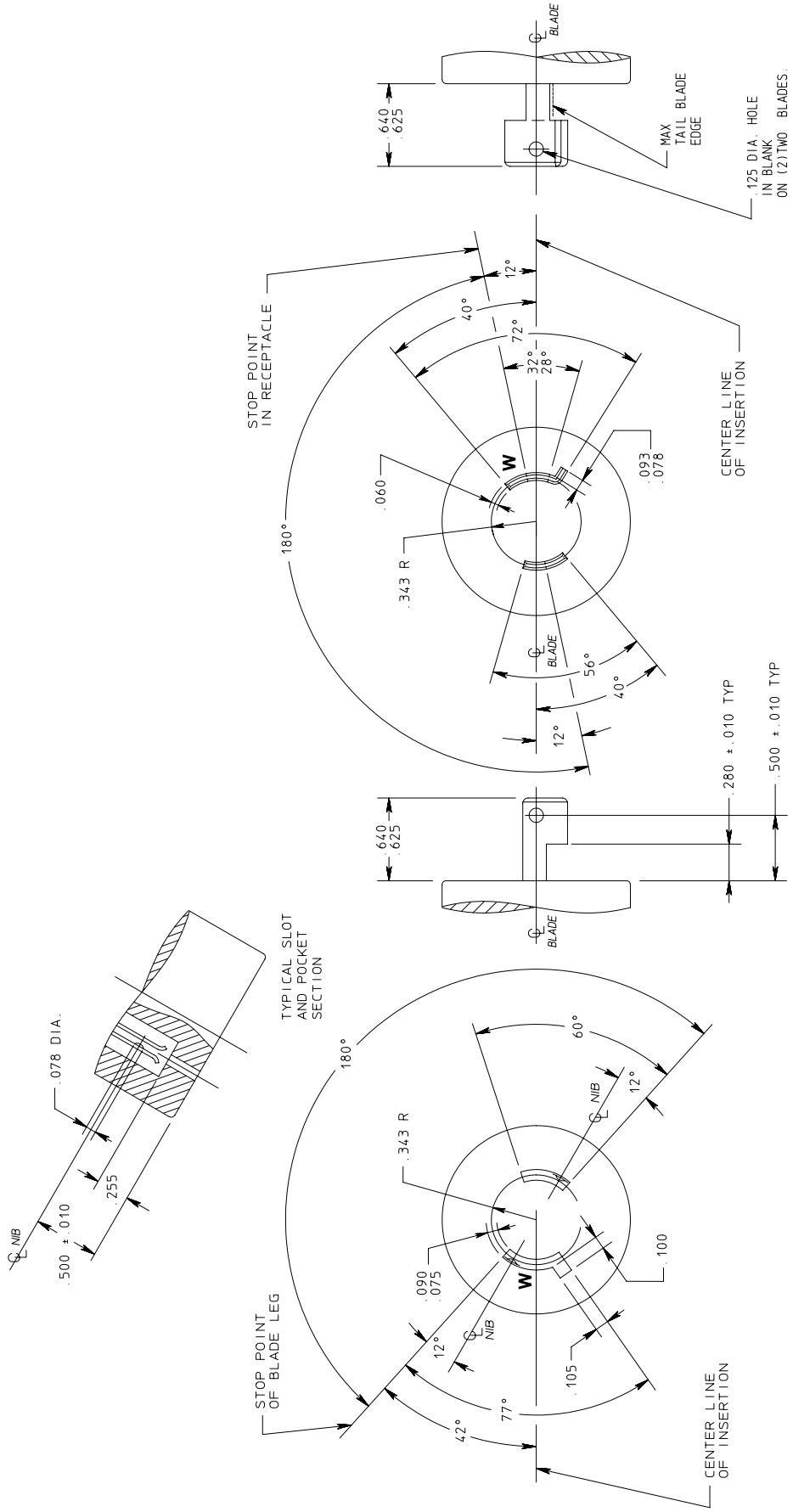

© Copyright 2002 by the National Electrical Manufacturers Association.

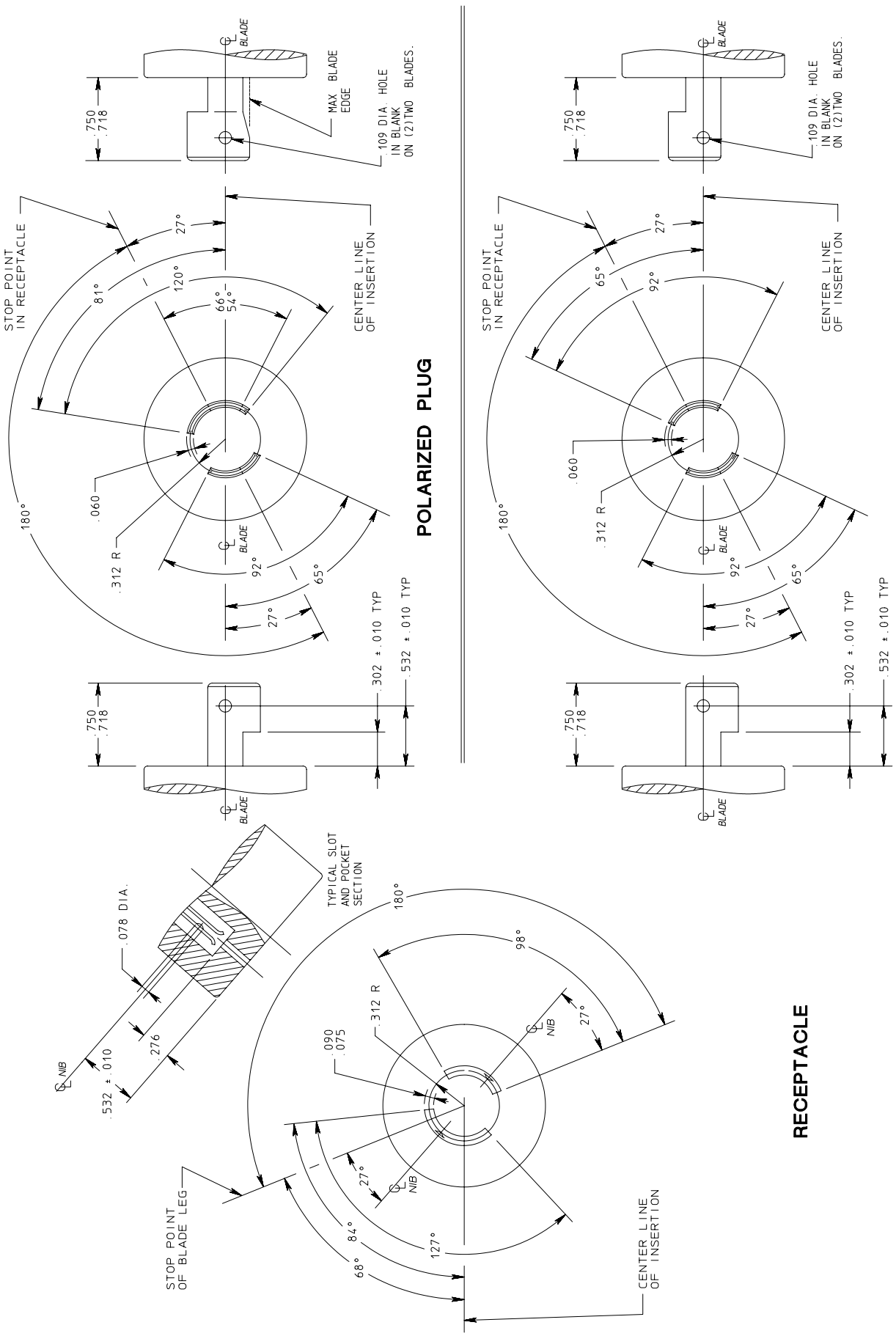

FIGURE L2–20
LOCKING TYPE PLUG AND RECEPTACLE
250 volts, 20 amperes, 2 pole, 2 wire

© Copyright 2002 by the National Electrical Manufacturers Association.

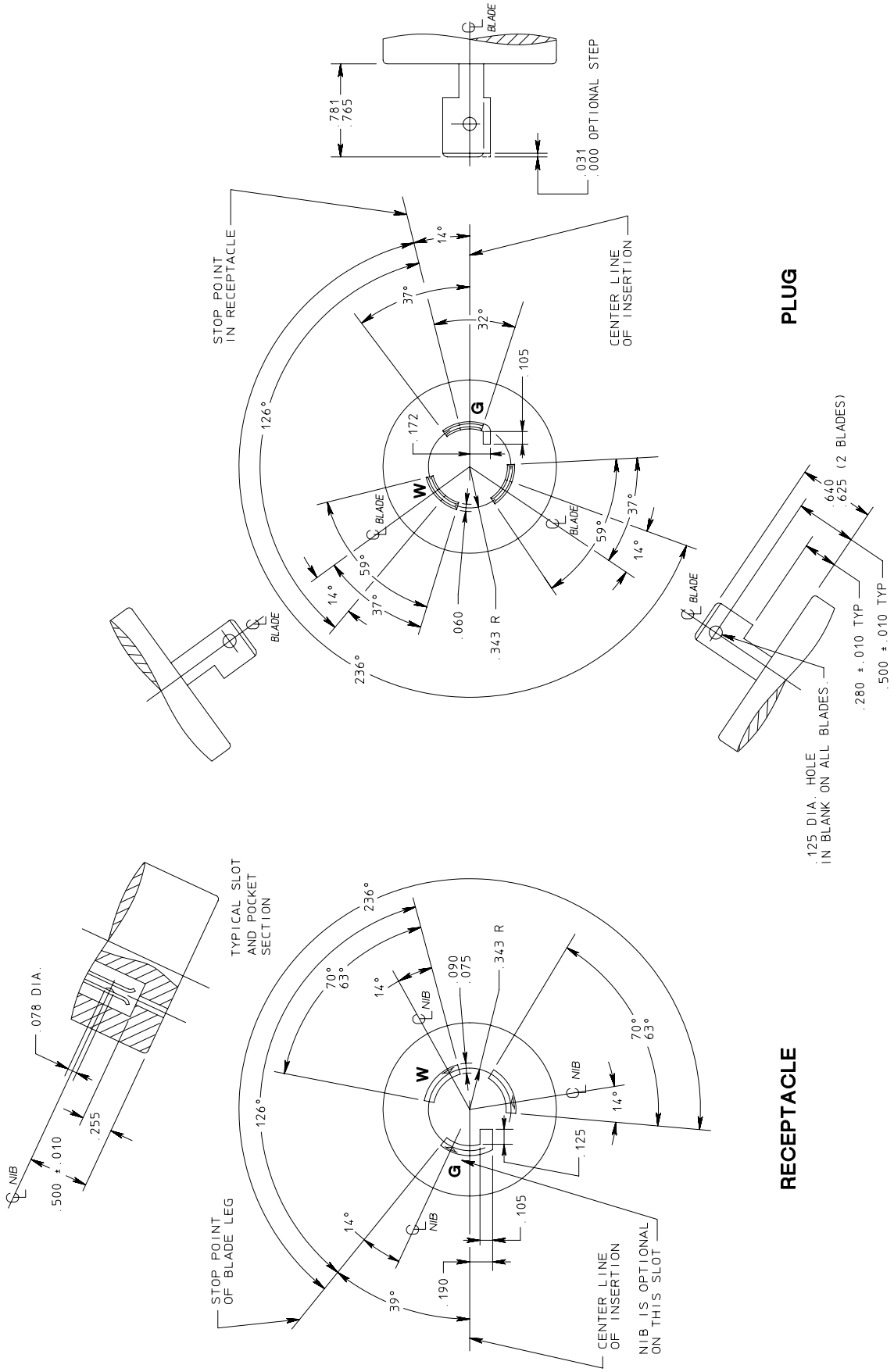

FIGURE L5–15
LOCKING TYPE PLUG AND RECEPTACLE
125 volts, 15 amperes, 2 pole, 3 wire, Grounding type

© Copyright 2002 by the National Electrical Manufacturers Association.

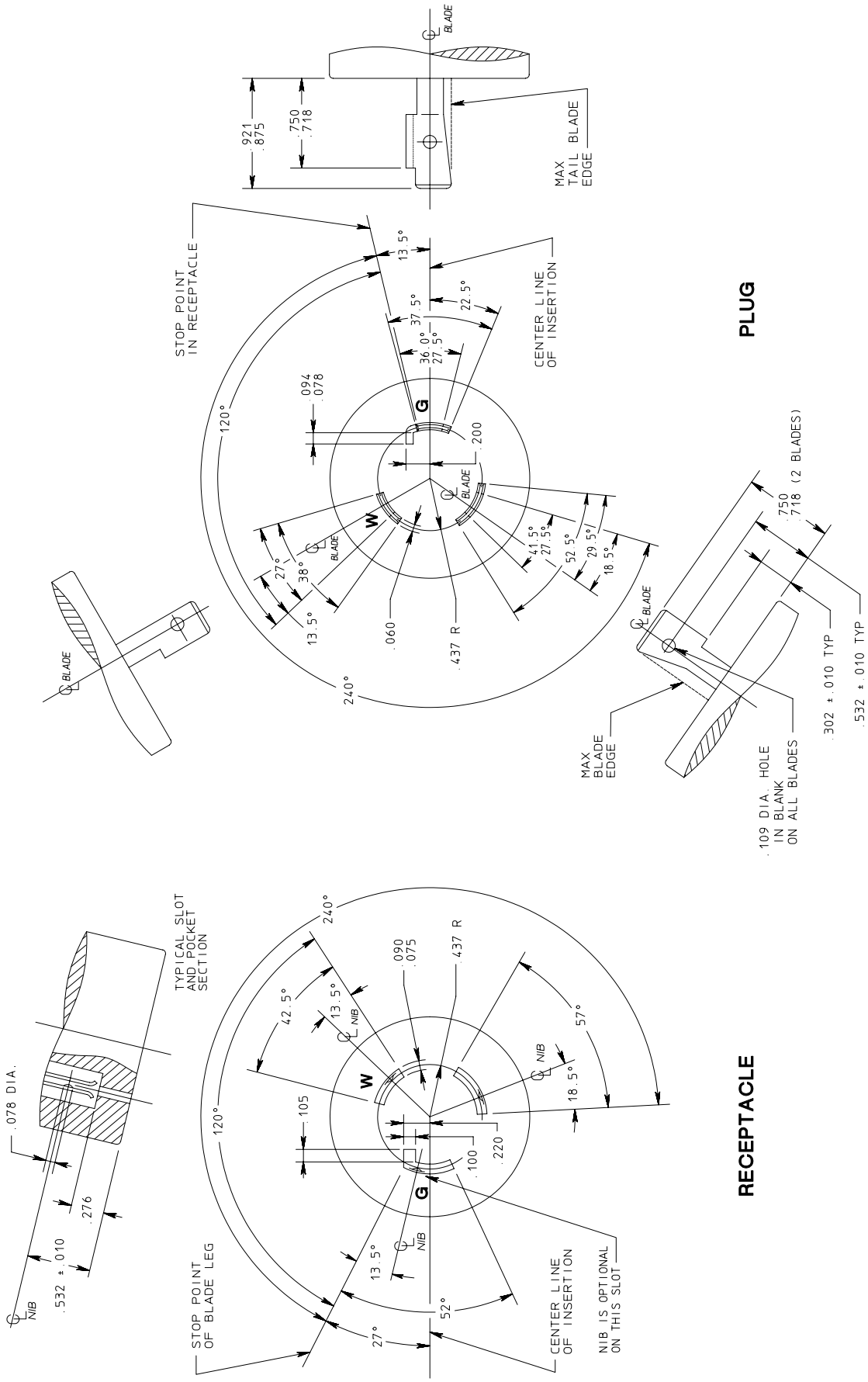

FIGURE L5–20
LOCKING TYPE PLUG AND RECEPTACLE
125 volts, 20 amperes, 2 pole, 3 wire, Grounding type

© Copyright 2002 by the National Electrical Manufacturers Association.

FIGURE L5–30
LOCKING TYPE PLUG AND RECEPTACLE
125 volts, 30 amperes, 2 pole, 3 wire, Grounding type

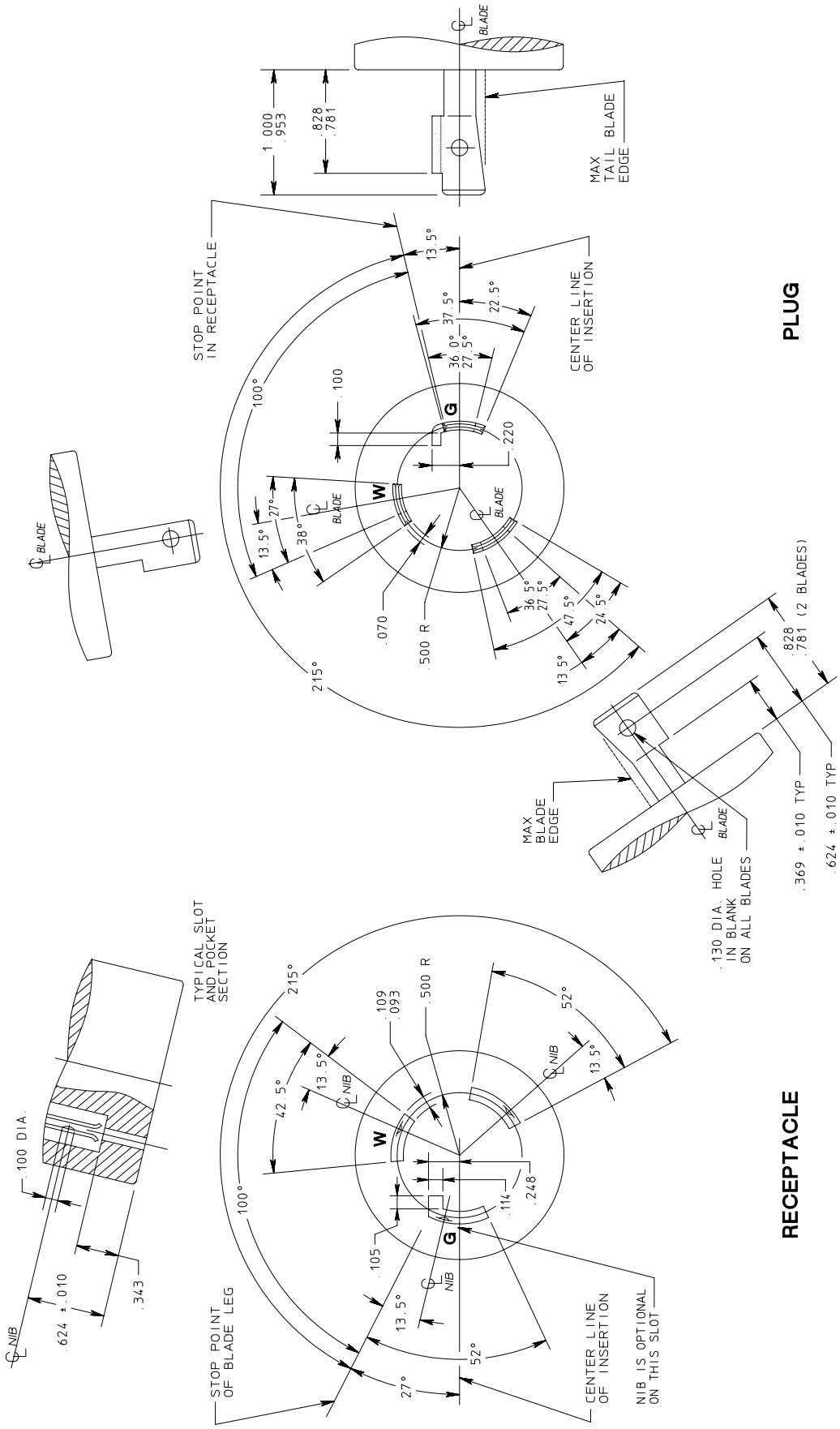

© Copyright 2002 by the National Electrical Manufacturers Association.

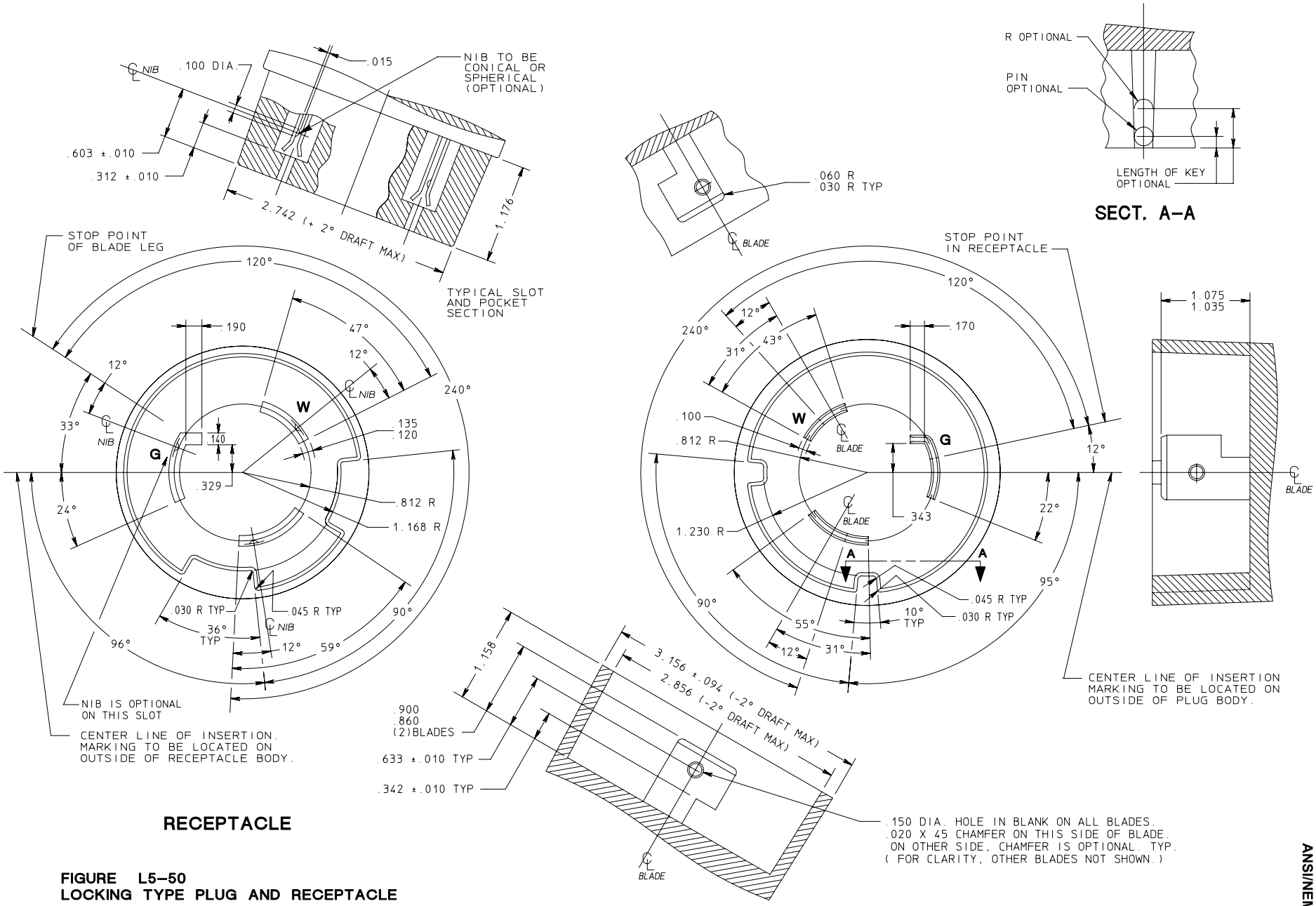

FIGURE L5–50
LOCKING TYPE PLUG AND RECEPTACLE
125 volts, 50 amperes, 2 pole, 3 wire, Grounding type

© Copyright 2002 by the National Electrical Manufacturers Association.

FIGURE L5–60
LOCKING TYPE PLUG AND RECEPTACLE
125 volts, 60 amperes, 2 pole, 3 wire, Grounding type

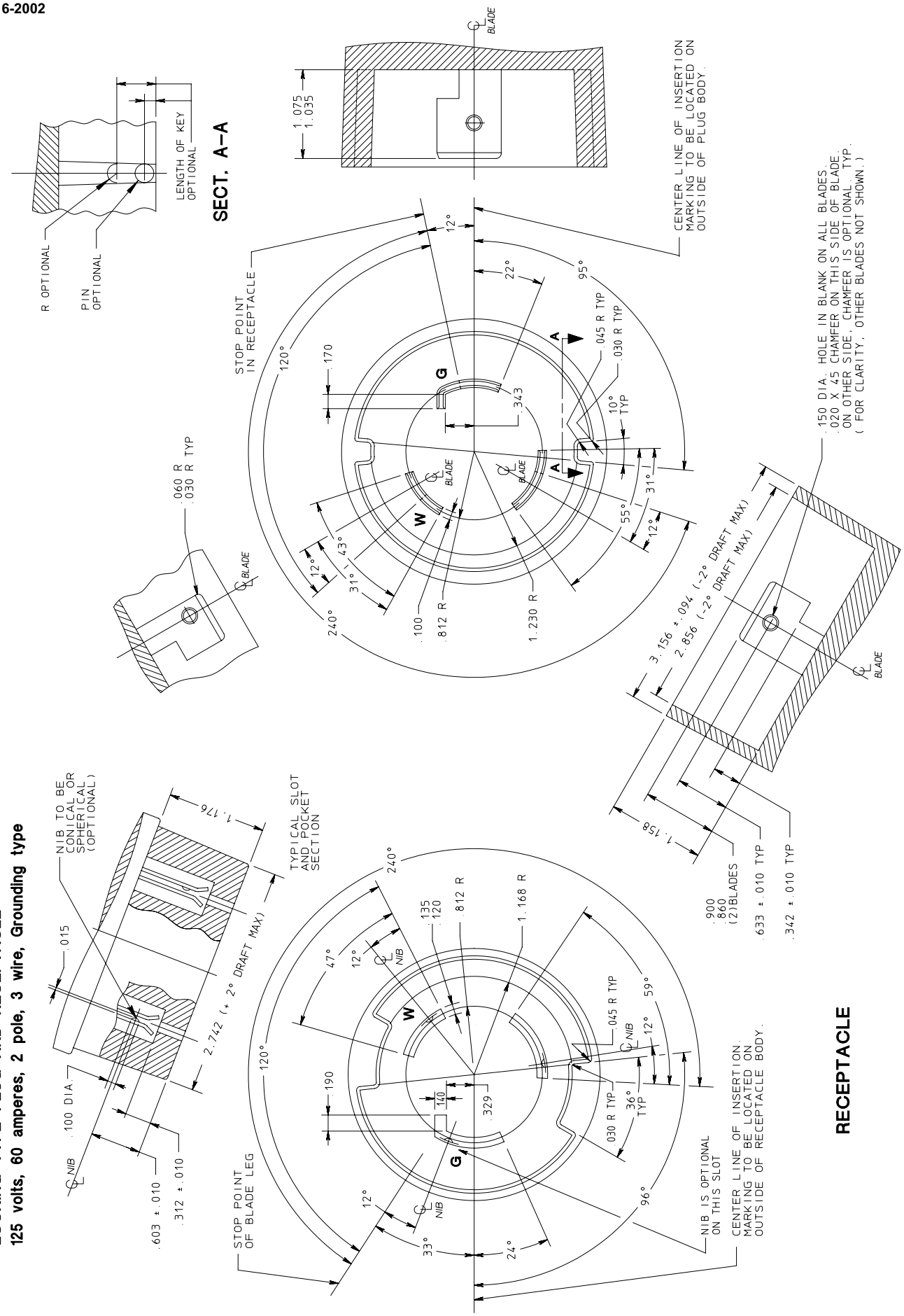

© Copyright 2002 by the National Electrical Manufacturers Association.

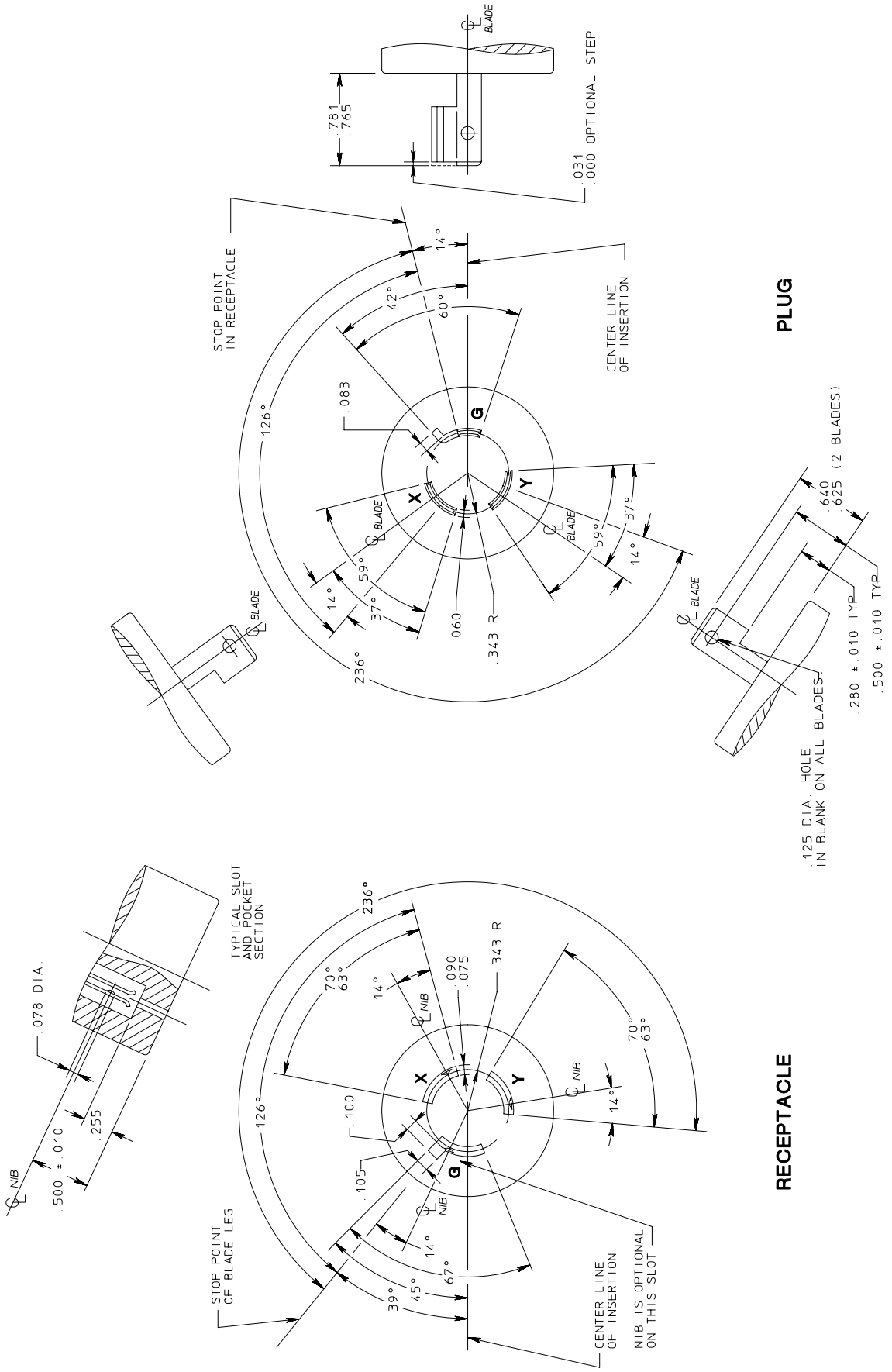

FIGURE L6–15
LOCKING TYPE PLUG AND RECEPTACLE
250 volts, 15 amperes, 2 pole, 3 wire, Grounding type

© Copyright 2002 by the National Electrical Manufacturers Association.

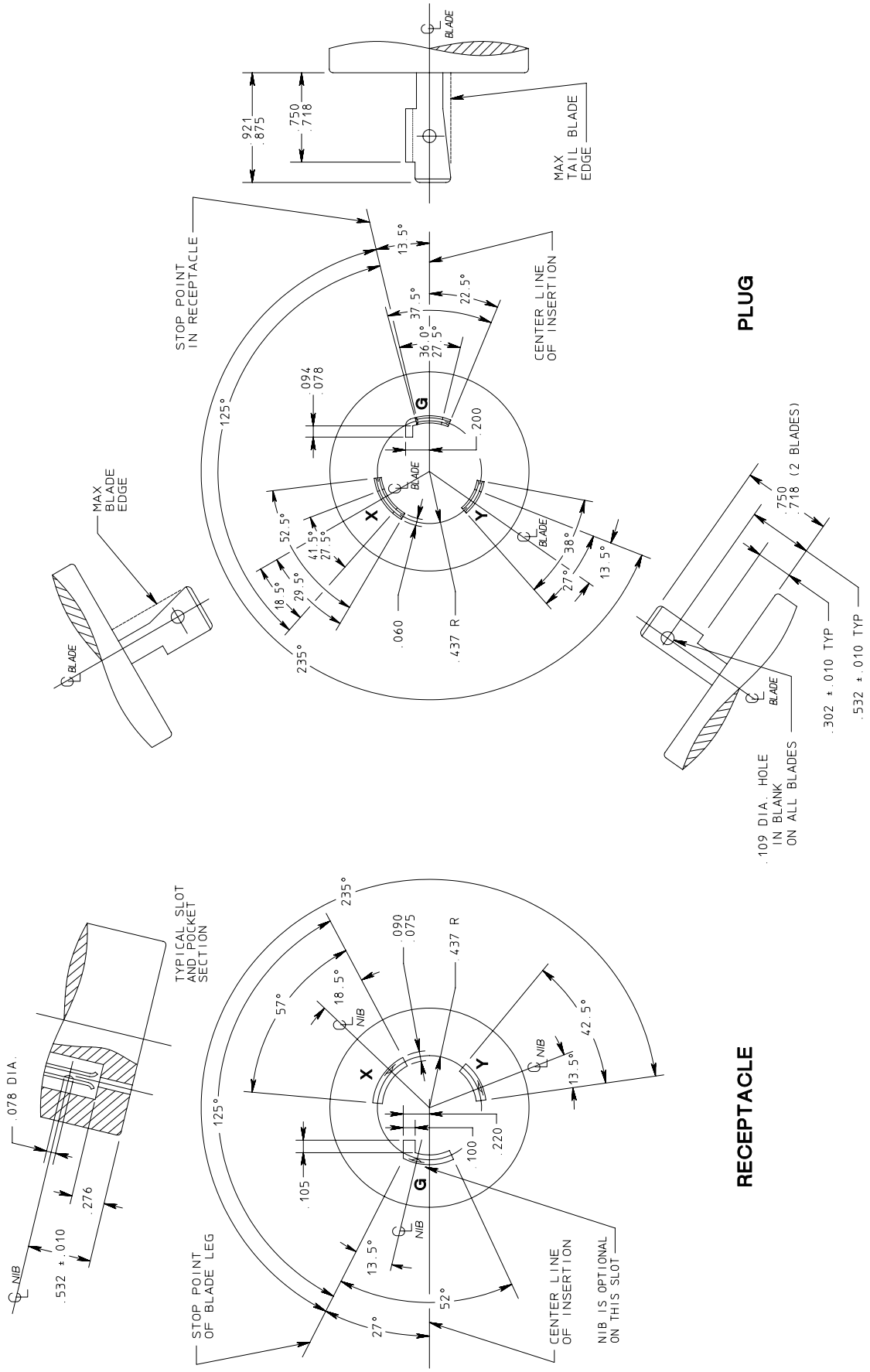

FIGURE L6–20
LOCKING TYPE PLUG AND RECEPTACLE
250 volts, 20 amperes, 2 pole, 3 wire, Grounding type

© Copyright 2002 by the National Electrical Manufacturers Association.

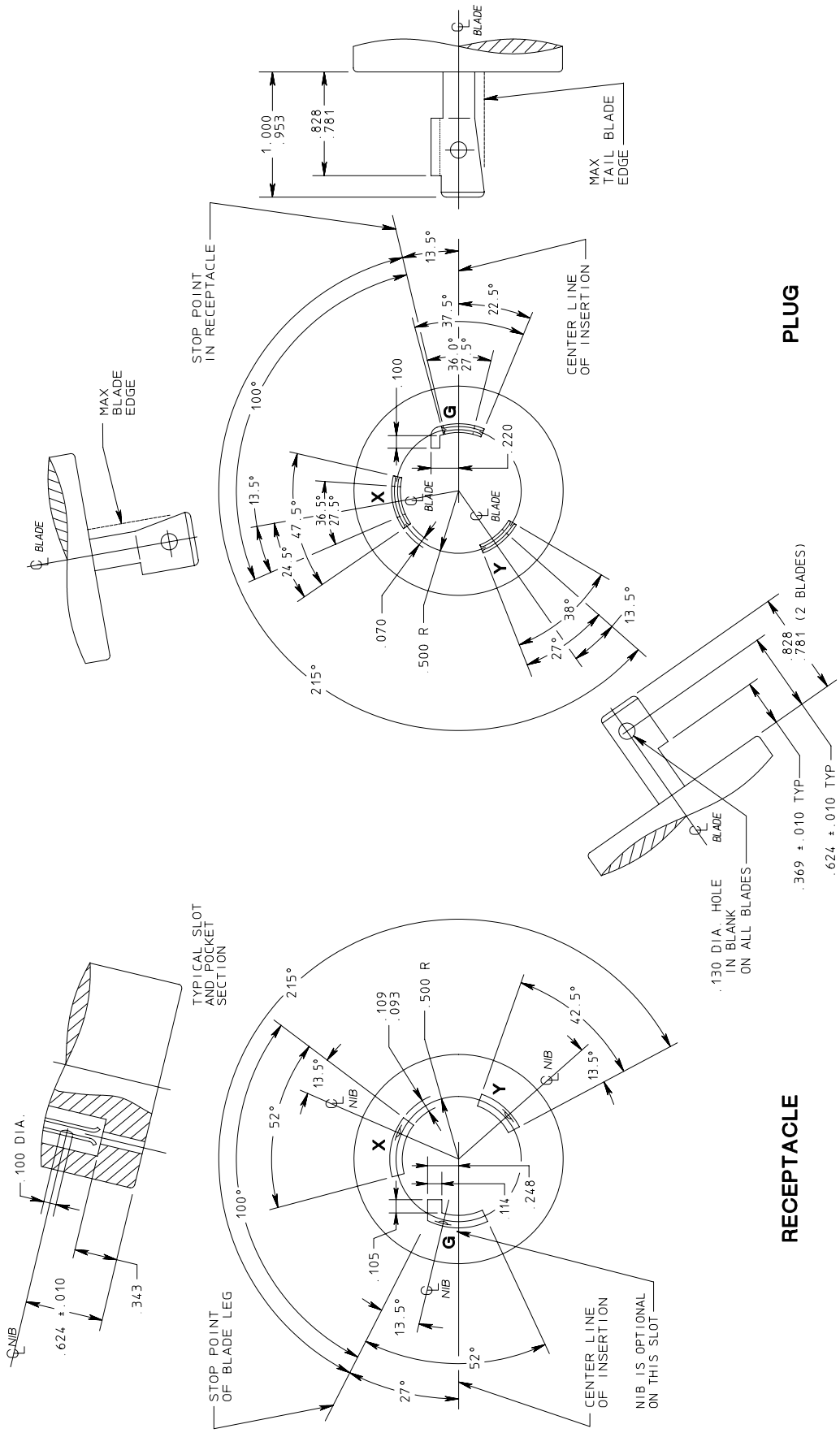

FIGURE L6–30
LOCKING TYPE PLUG AND RECEPTACLE
250 volts, 30 amperes, 2 pole, 3 wire, Grounding type

© Copyright 2002 by the National Electrical Manufacturers Association.

FIGURE L6–50
LOCKING TYPE PLUG AND RECEPTACLE
250 volts, 50 amperes, 2 pole, 3 wire, Grounding type

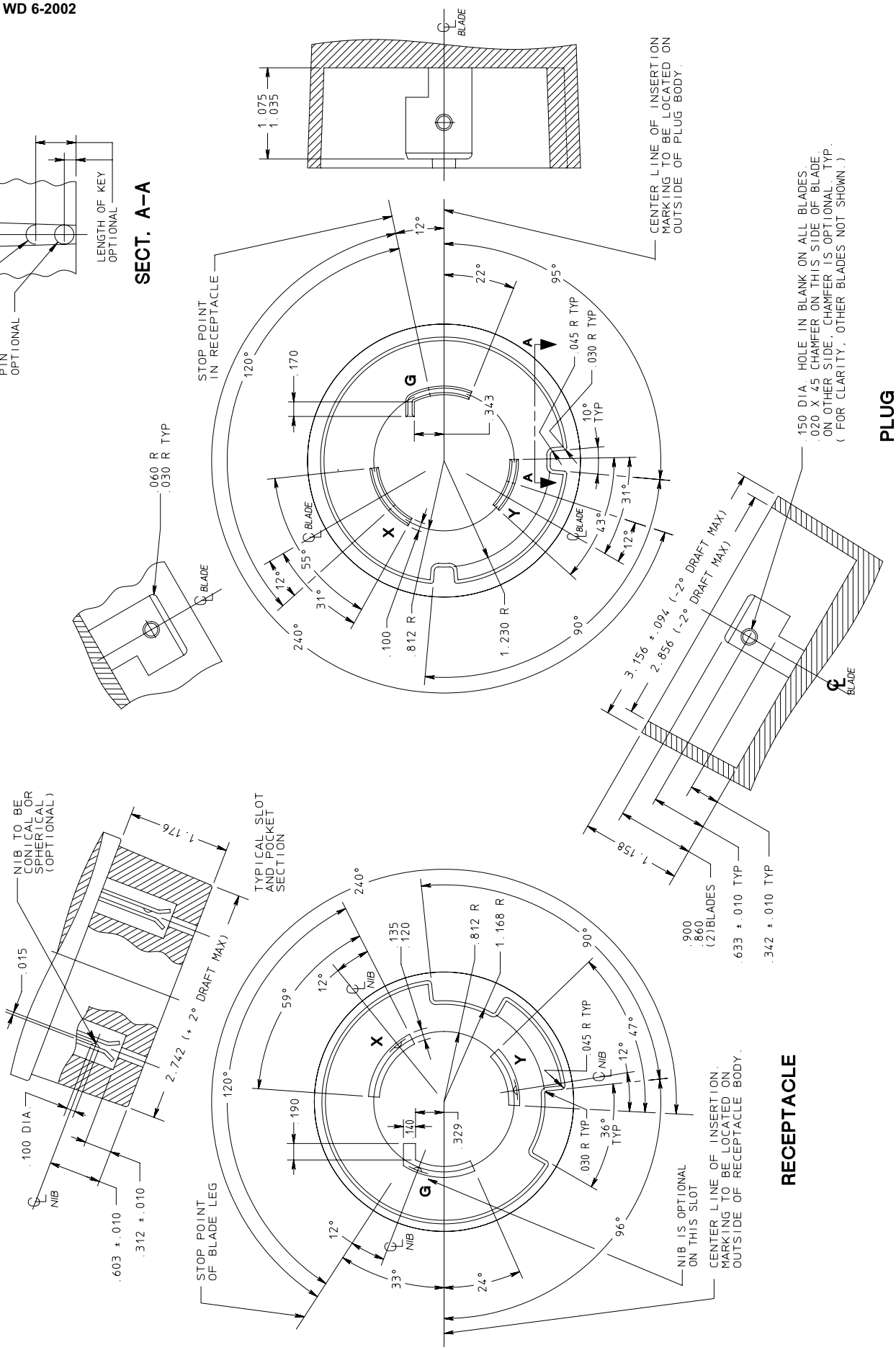

© Copyright 2002 by the National Electrical Manufacturers Association.

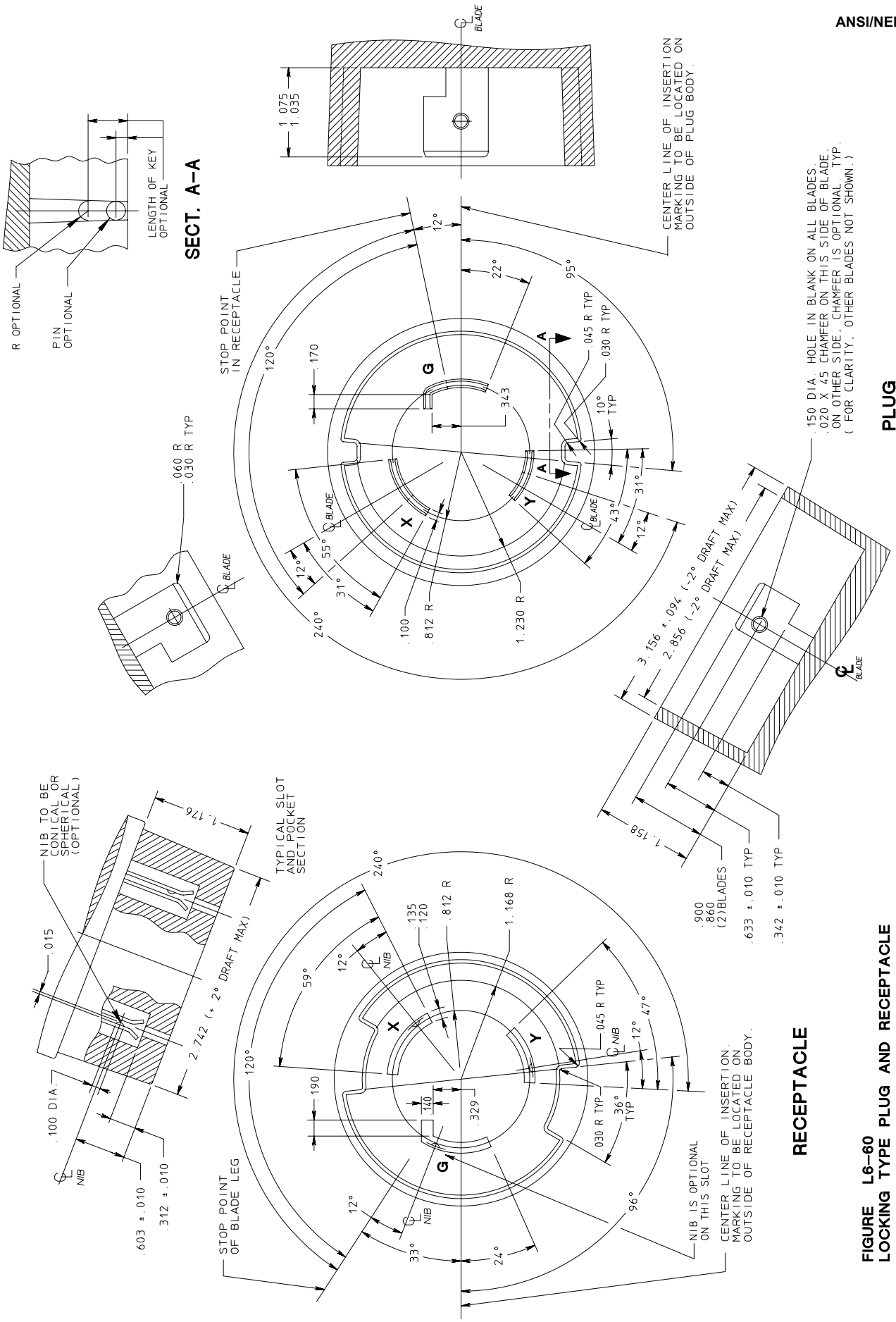

FIGURE L6–60
LOCKING TYPE PLUG AND RECEPTACLE
250 volts, 60 amperes, 2 pole, 3 wire, Grounding type

© Copyright 2002 by the National Electrical Manufacturers Association.

FIGURE L7–15
LOCKING TYPE PLUG AND RECEPTACLE
277 volts AC, 15 amperes, 2 pole, 3 wire, Grounding type

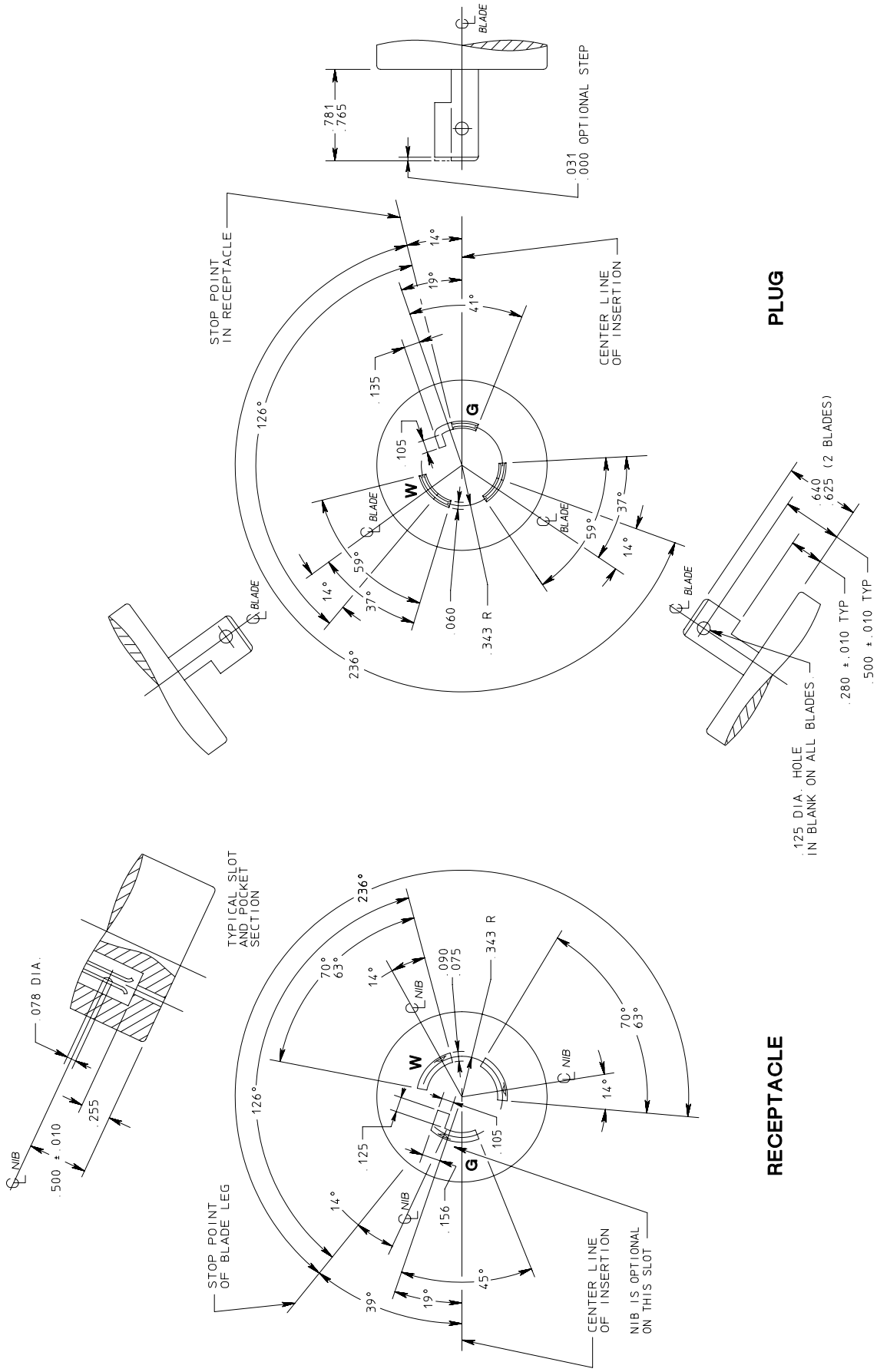

© Copyright 2002 by the National Electrical Manufacturers Association.

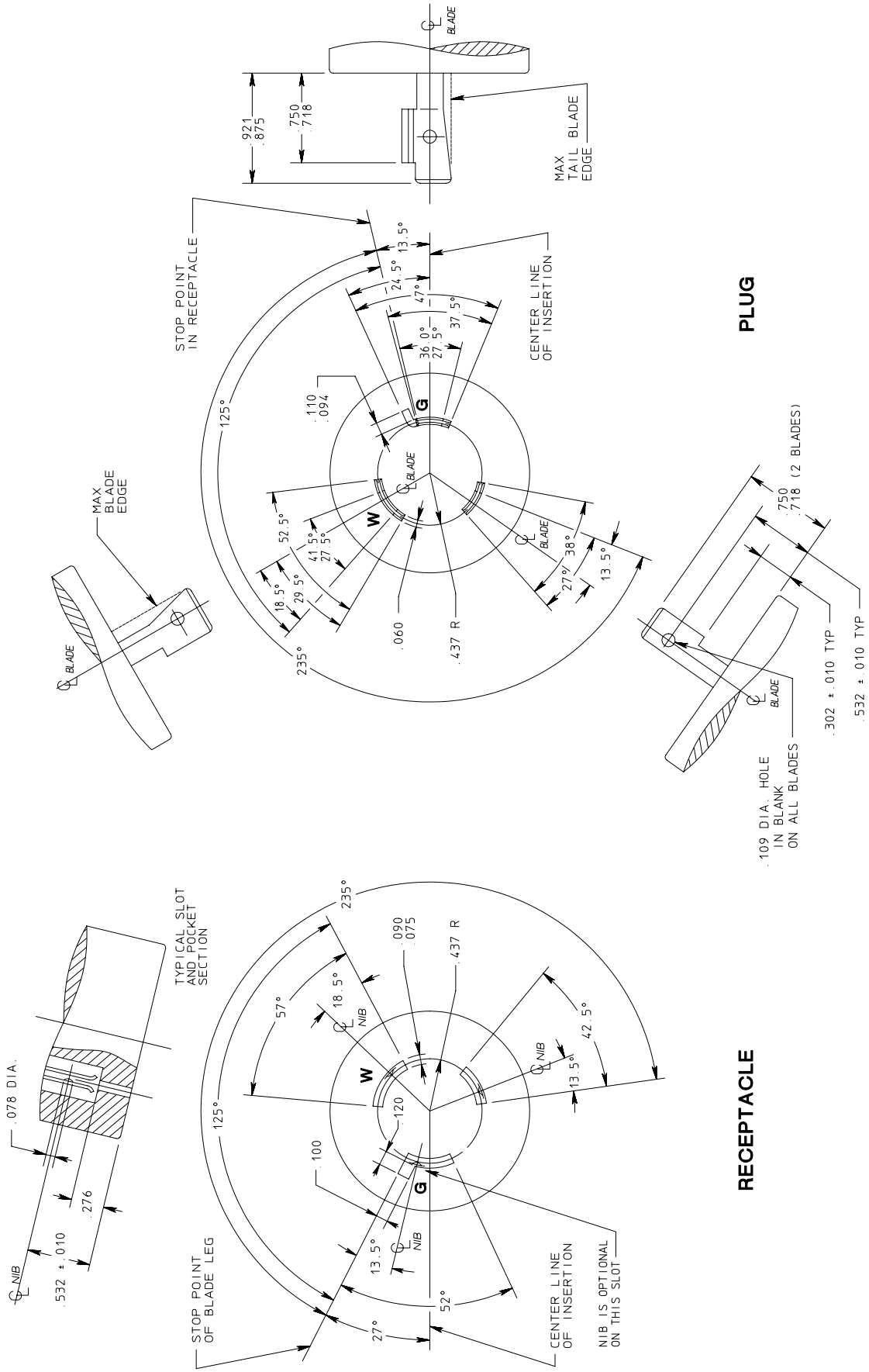

FIGURE L7–20
LOCKING TYPE PLUG AND RECEPTACLE
277 volts AC, 20 amperes, 2 pole, 3 wire, Grounding type

© Copyright 2002 by the National Electrical Manufacturers Association.

FIGURE L7–30
LOCKING TYPE PLUG AND RECEPTACLE
277 volts AC, 30 amperes, 2 pole, 3 wire, Grounding type

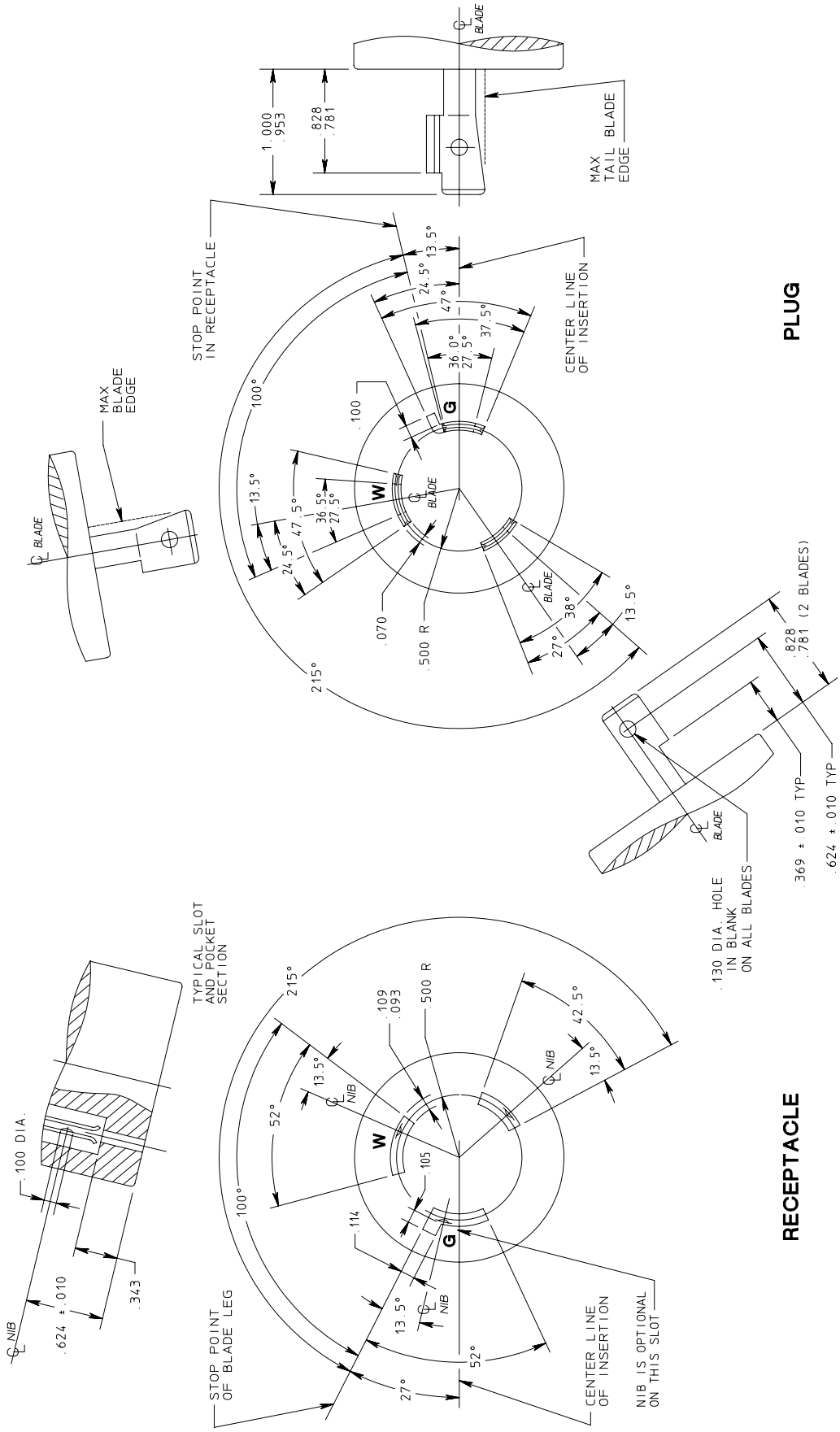

© Copyright 2002 by the National Electrical Manufacturers Association.

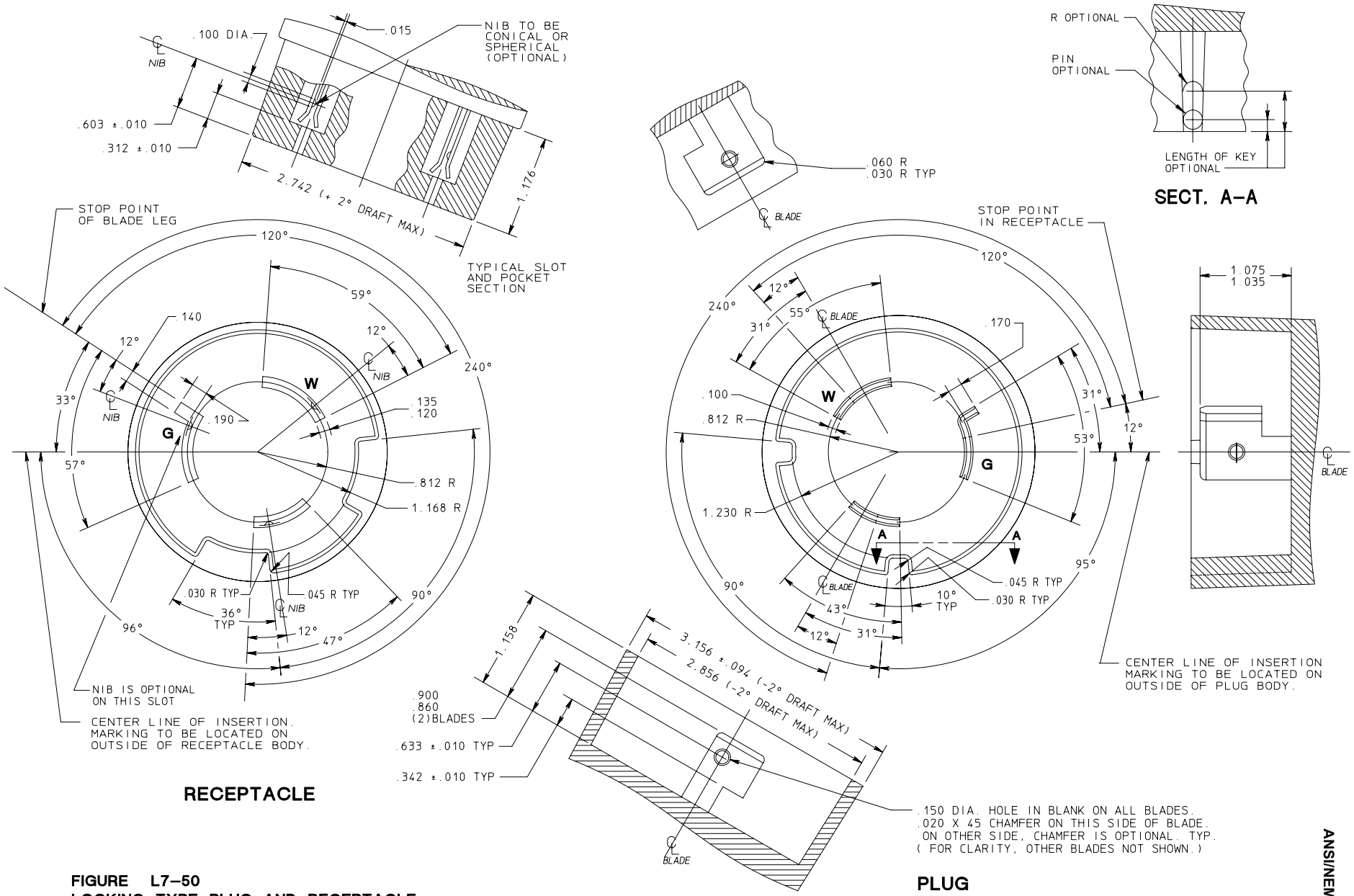

FIGURE L7–50
LOCKING TYPE PLUG AND RECEPTACLE
277 volts AC, 50 amperes, 2 pole, 3 wire, Grounding type

© Copyright 2002 by the National Electrical Manufacturers Association.

FIGURE L7–60
LOCKING TYPE PLUG AND RECEPTACLE
277 volts AC, 60 amperes, 2 pole, 3 wire, Grounding type

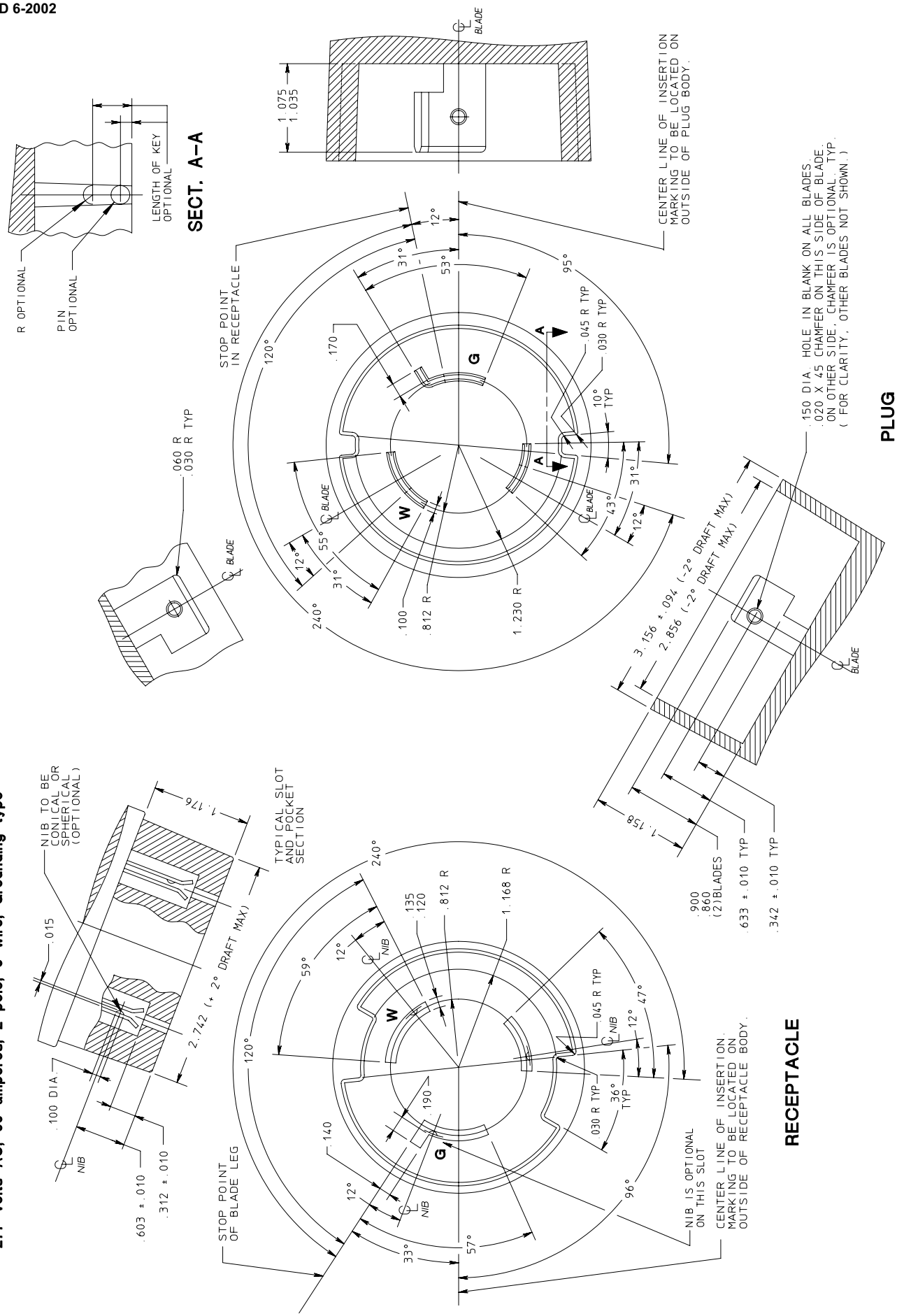

© Copyright 2002 by the National Electrical Manufacturers Association.

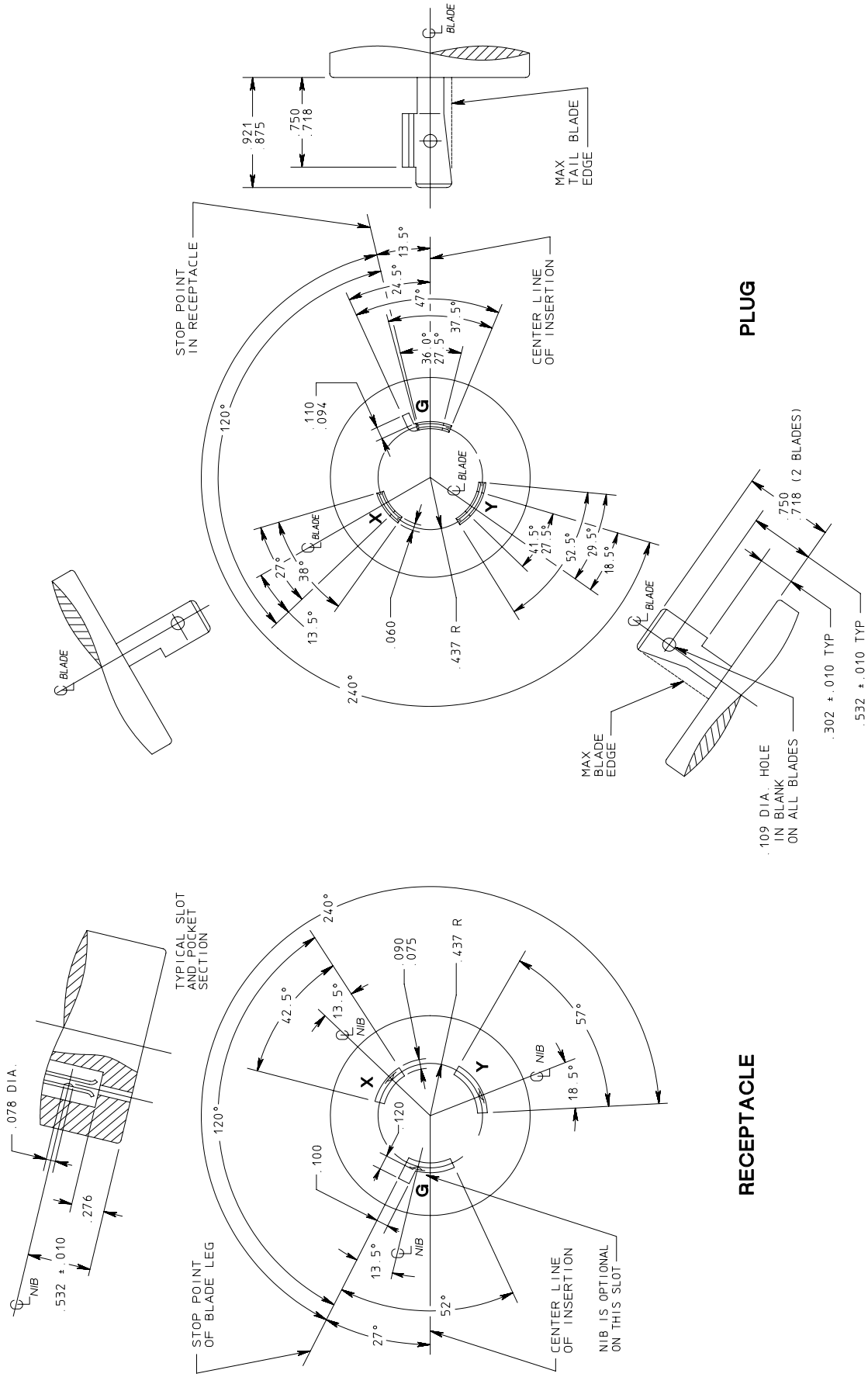

FIGURE L8–20
LOCKING TYPE PLUG AND RECEPTACLE
480 volts AC, 20 amperes, 2 pole, 3 wire, Grounding type

© Copyright 2002 by the National Electrical Manufacturers Association.

FIGURE L8–30
LOCKING TYPE PLUG AND RECEPTACLE
480 volts AC, 30 amperes, 2 pole, 3 wire, Grounding type

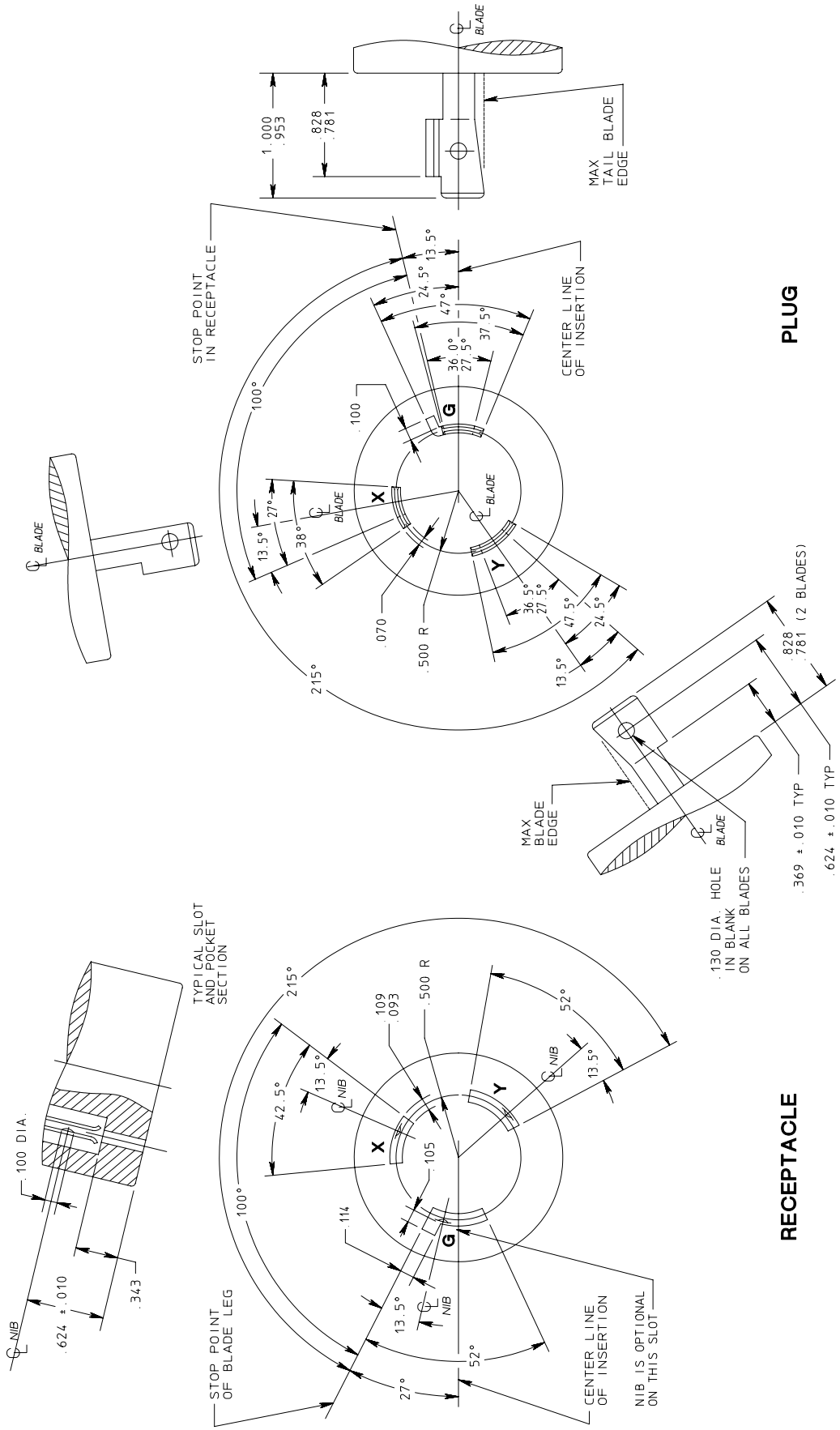

© Copyright 2002 by the National Electrical Manufacturers Association.

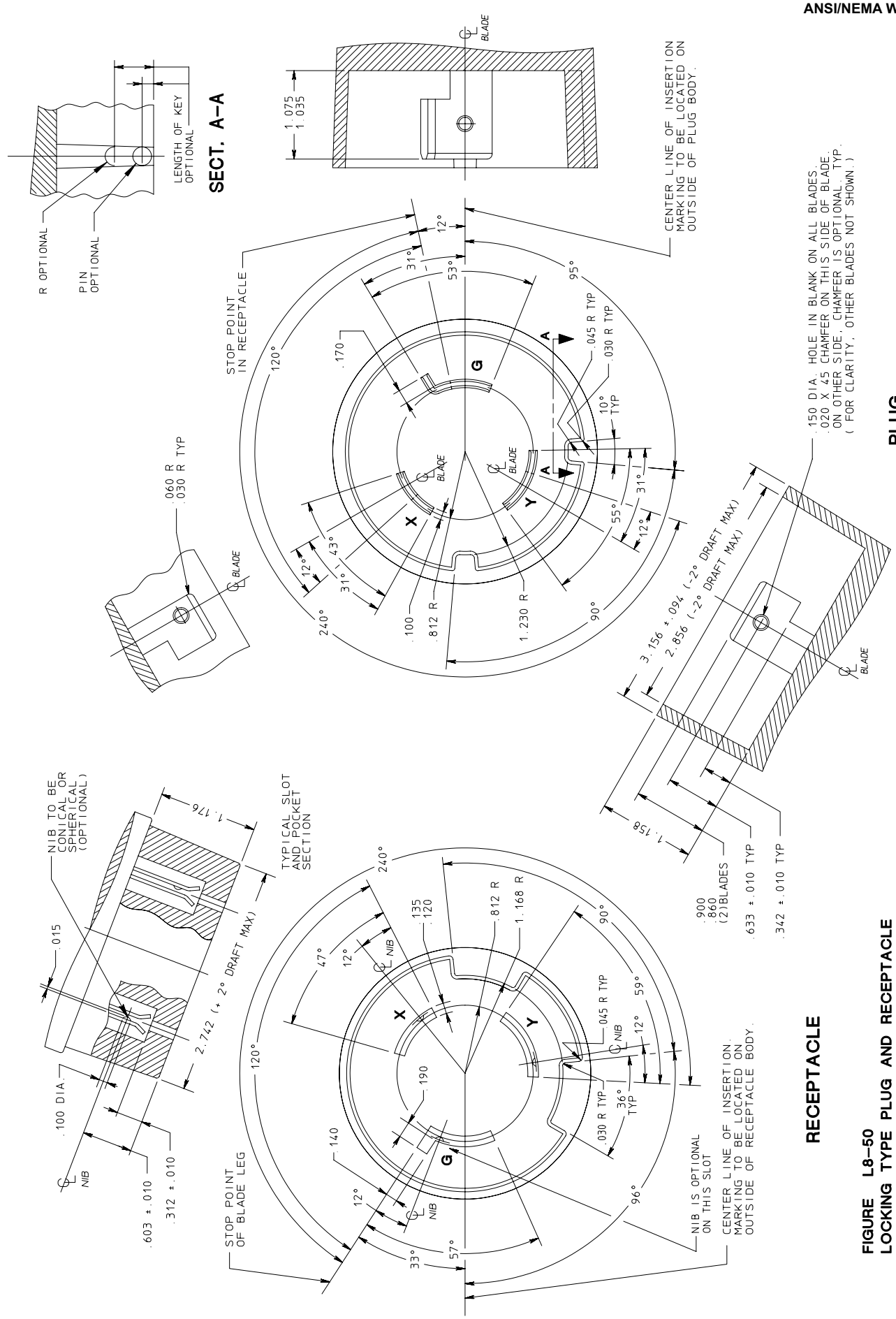

FIGURE L8–50
LOCKING TYPE PLUG AND RECEPTACLE
480 volts AC, 50 amperes, 2 pole, 3 wire, Grounding type

© Copyright 2002 by the National Electrical Manufacturers Association.

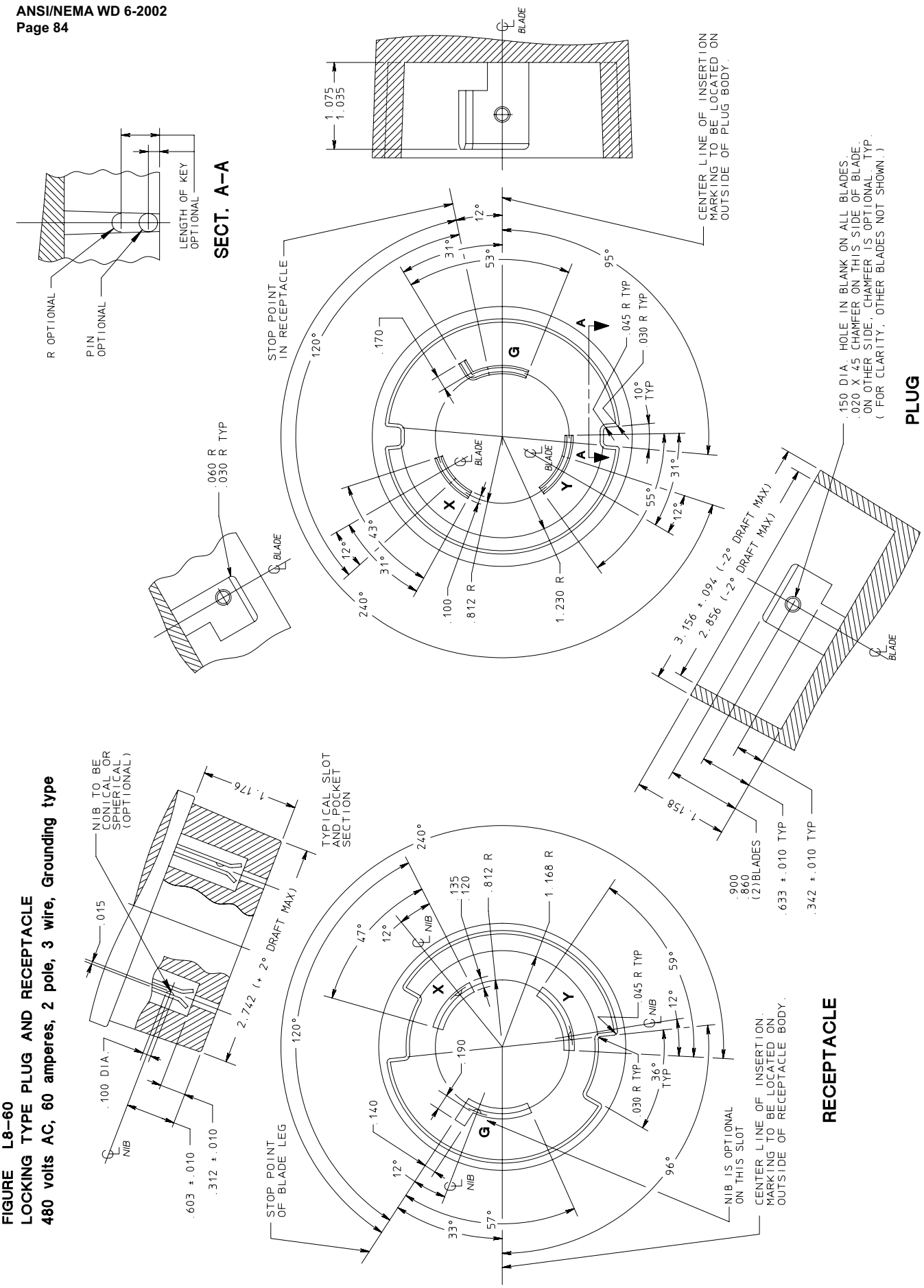

FIGURE L8–60
LOCKING TYPE PLUG AND RECEPTACLE
480 volts AC, 60 amperes, 2 pole, 3 wire, Grounding type

© Copyright 2002 by the National Electrical Manufacturers Association.

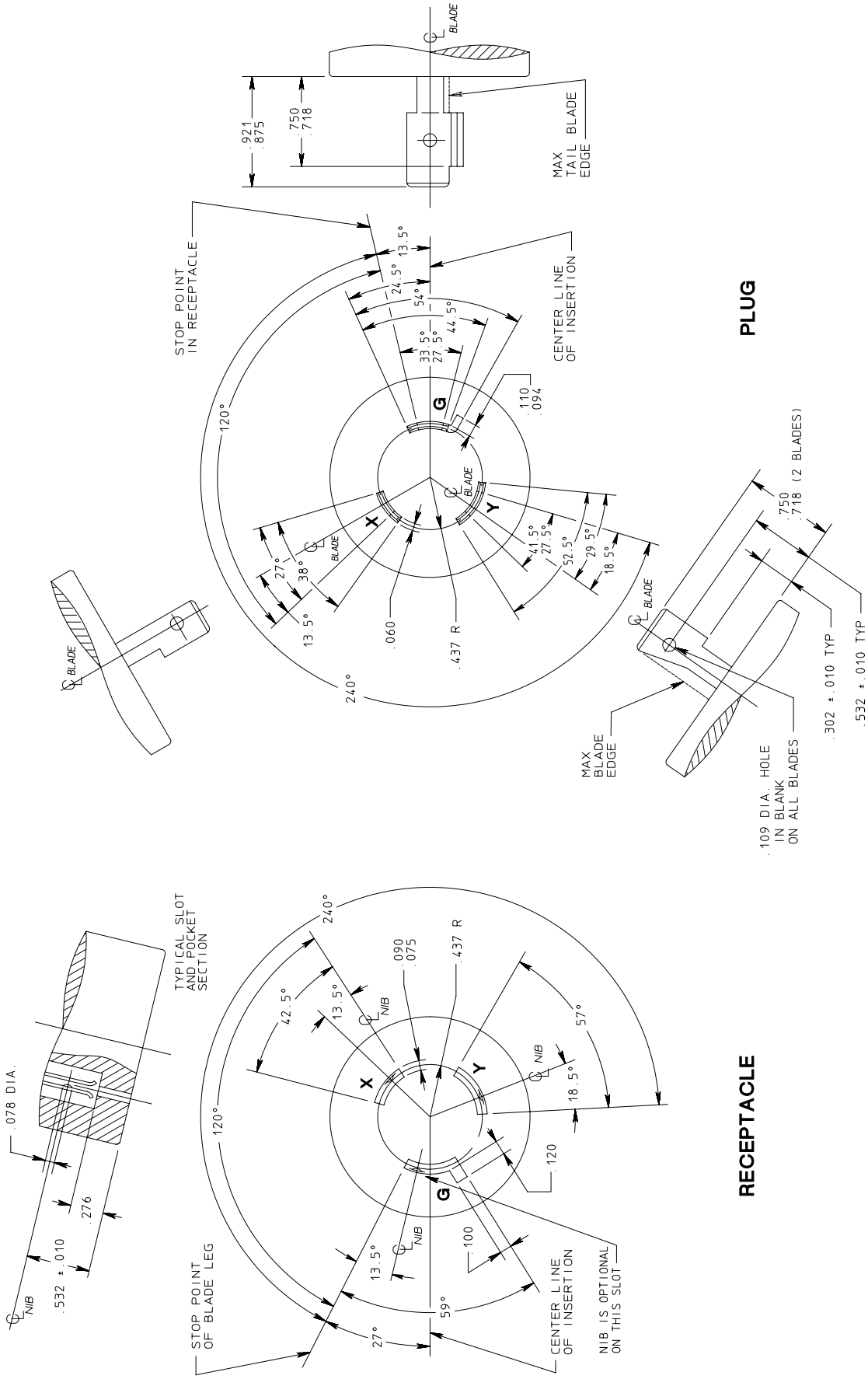

FIGURE L9–20
LOCKING TYPE PLUG AND RECEPTACLE
600 volts AC, 20 amperes, 2 pole, 3 wire, Grounding type

© Copyright 2002 by the National Electrical Manufacturers Association.

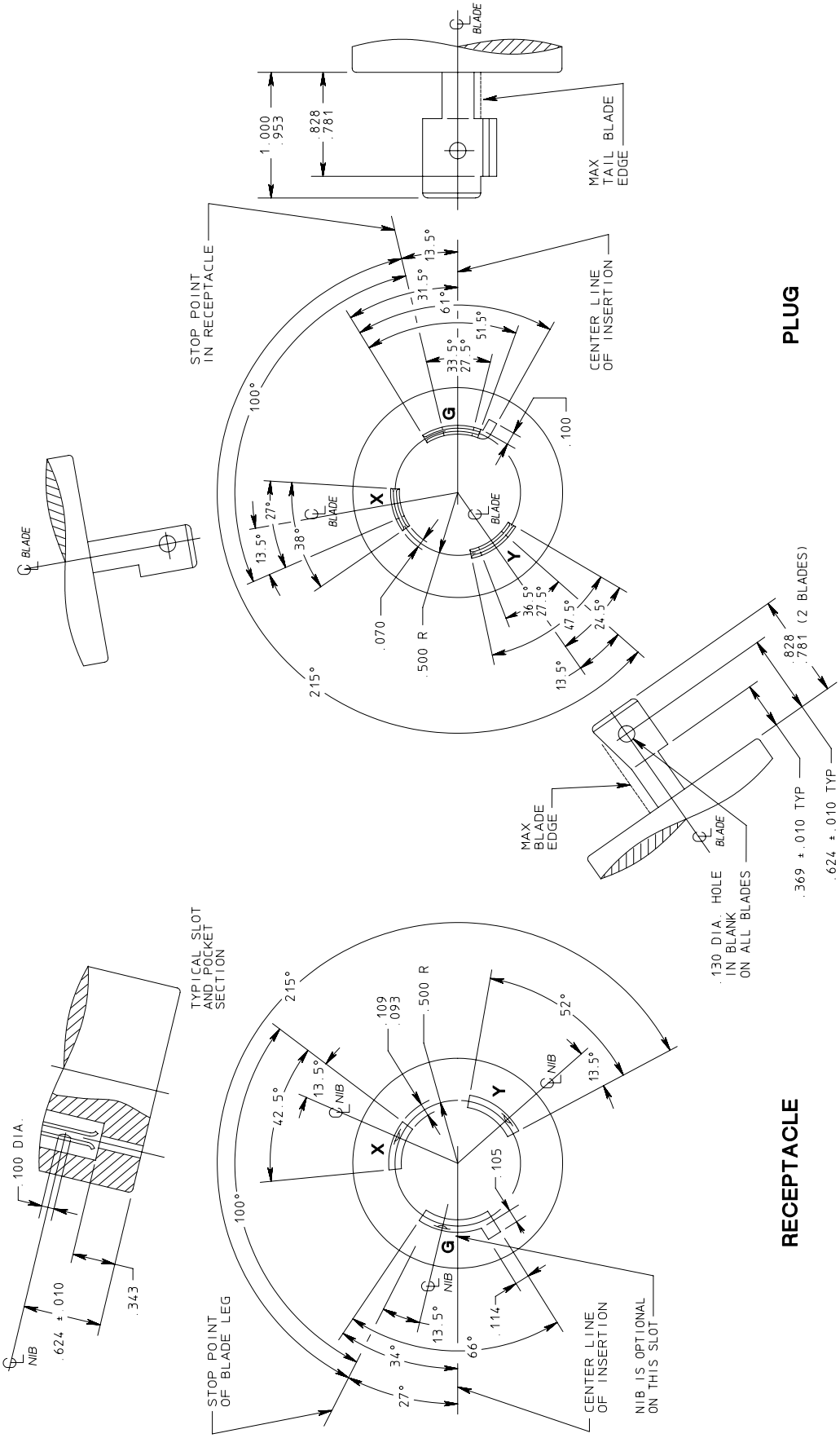

FIGURE L9–30
LOCKING TYPE PLUG AND RECEPTACLE
600 volts AC, 30 amperes, 2 pole, 3 wire, Grounding type

© Copyright 2002 by the National Electrical Manufacturers Association.

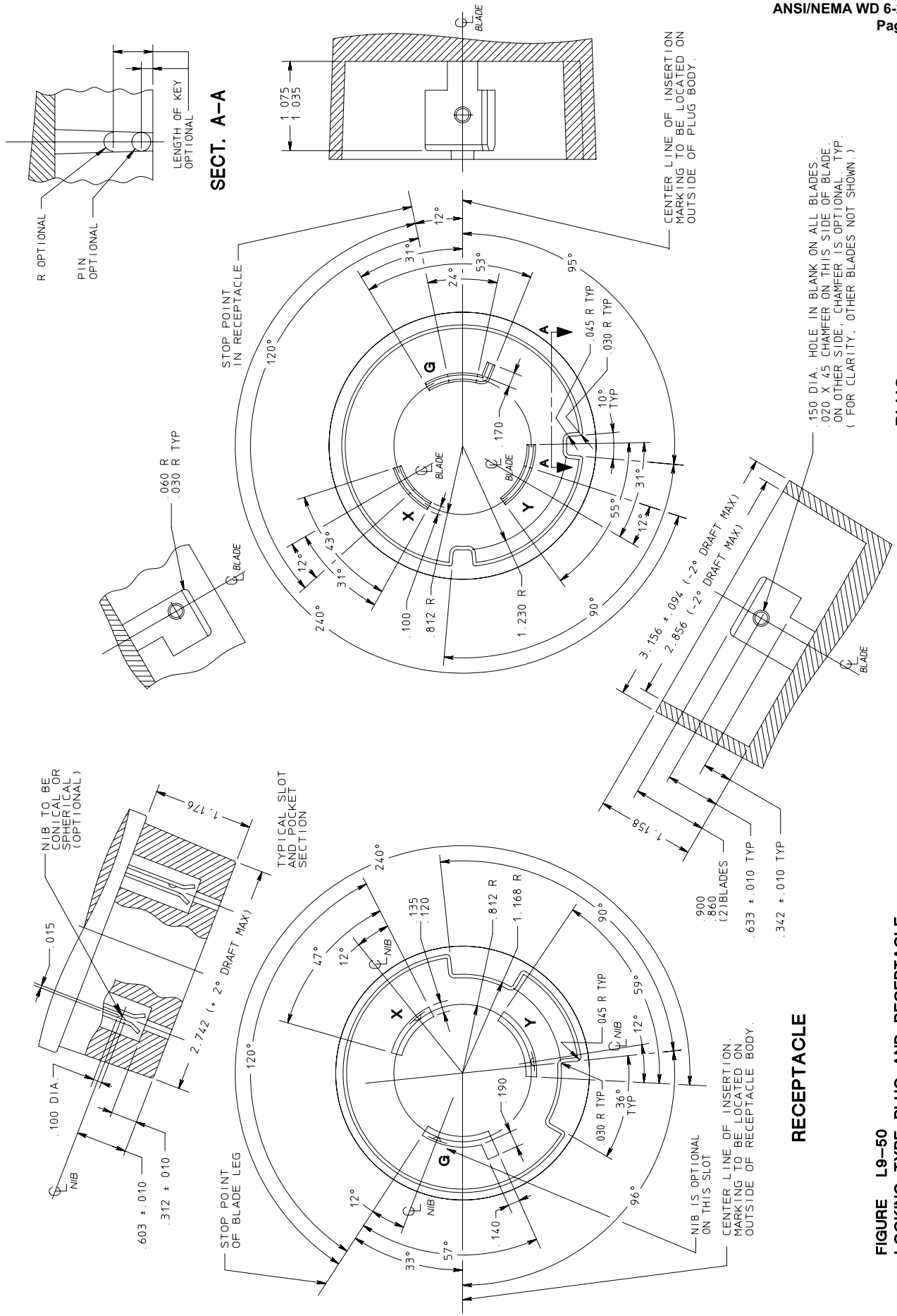

FIGURE L9–50
LOCKING TYPE PLUG AND RECEPTACLE
600 volts AC, 50 amperes, 2 pole, 3 wire, Grounding type

© Copyright 2002 by the National Electrical Manufacturers Association.

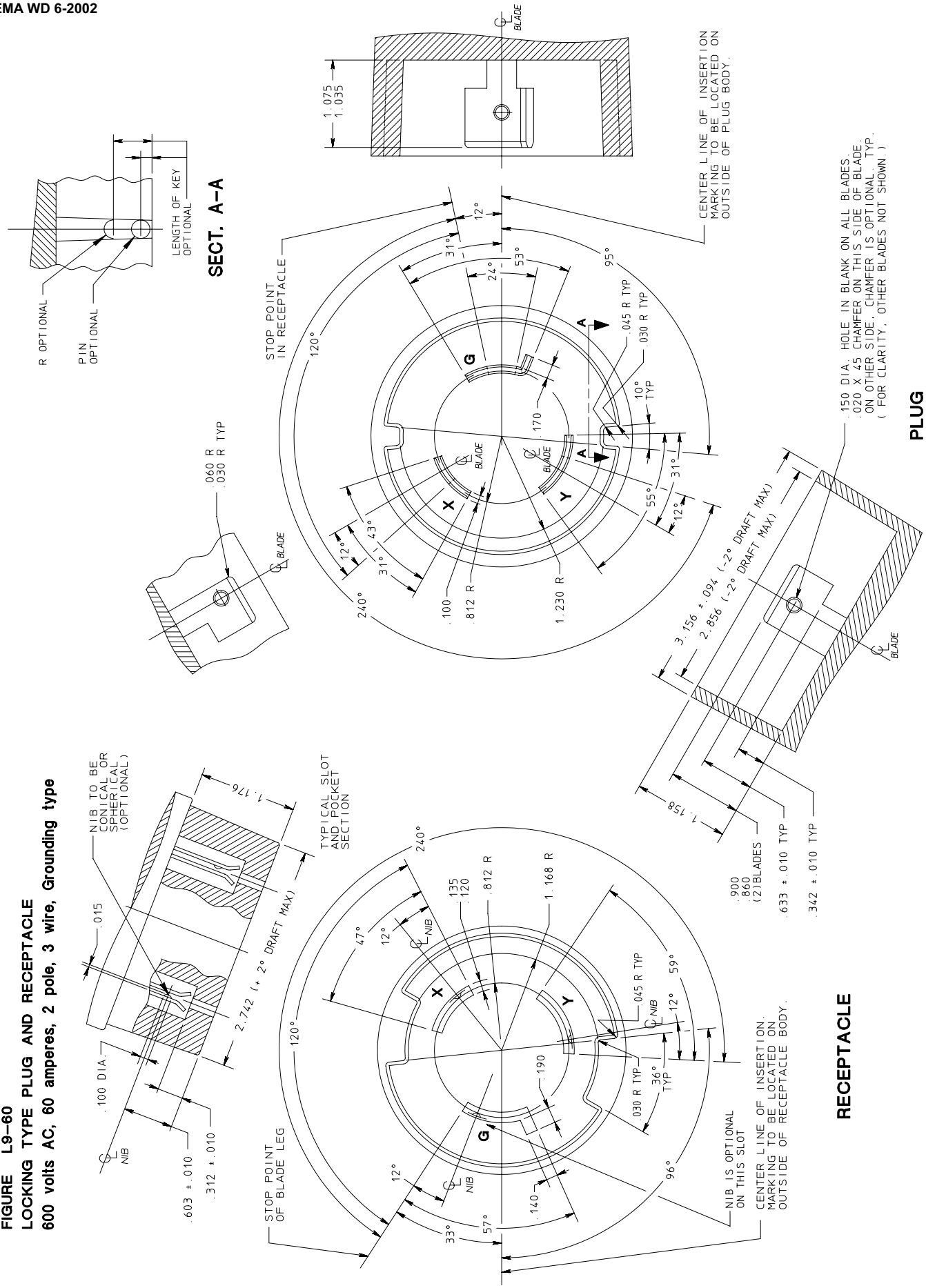

FIGURE L9–60
LOCKING TYPE PLUG AND RECEPTACLE
600 volts AC, 60 amperes, 2 pole, 3 wire, Grounding type

© Copyright 2002 by the National Electrical Manufacturers Association.

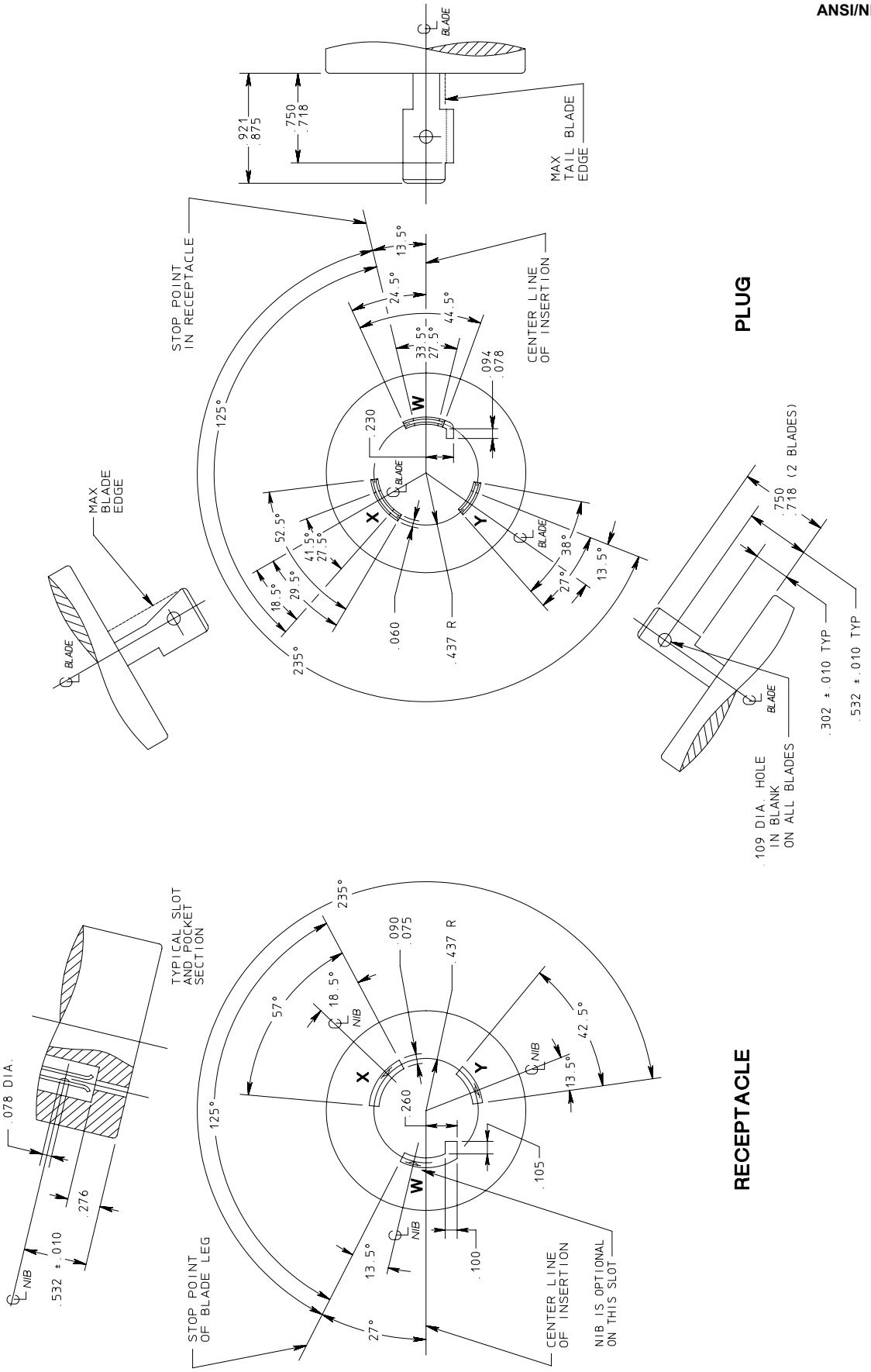

FIGURE L10–20
LOCKING TYPE PLUG AND RECEPTACLE
125/250 volts, 20 amperes, 3 pole, 3 wire

© Copyright 2002 by the National Electrical Manufacturers Association.

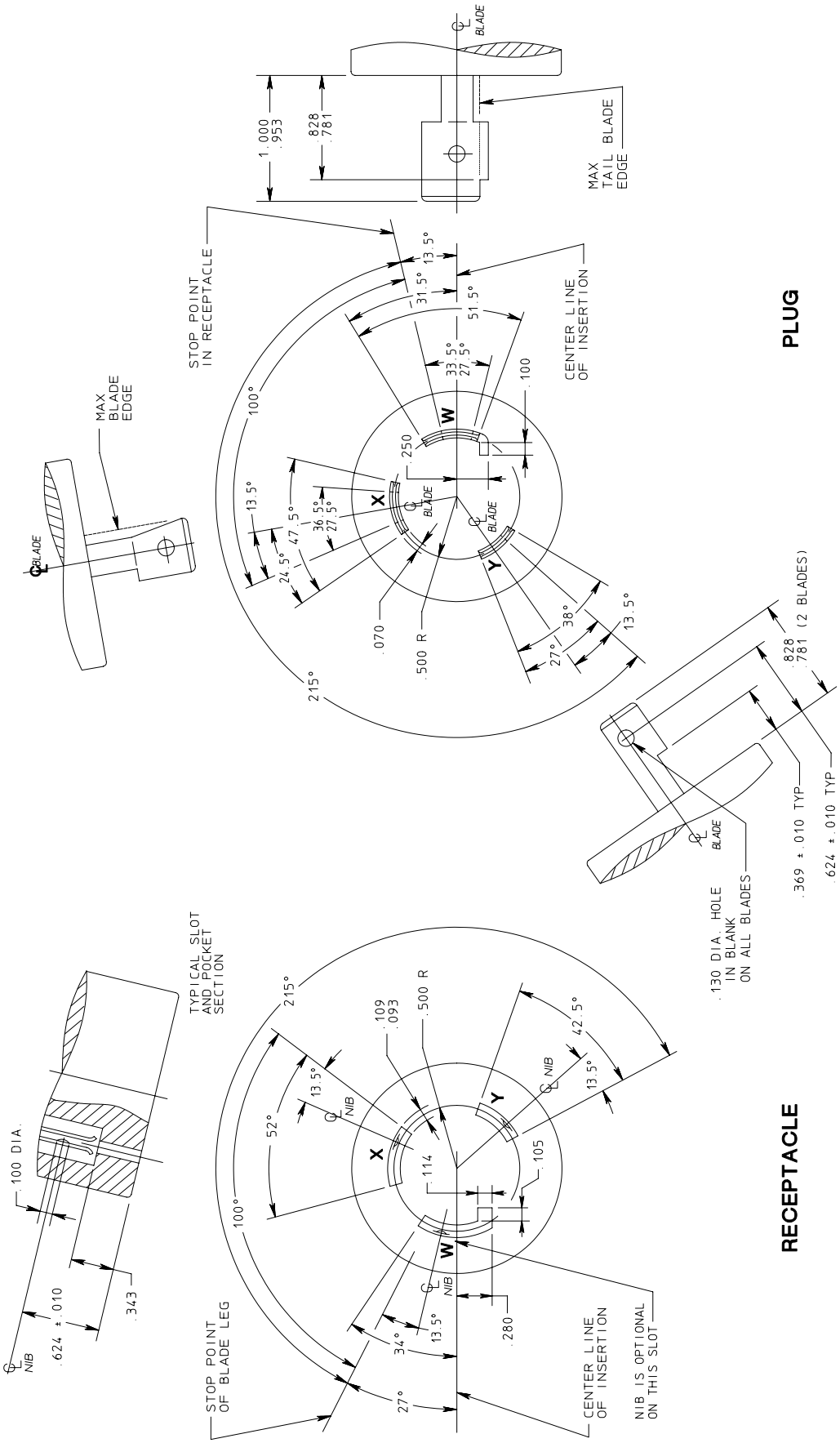

FIGURE L10–30
LOCKING TYPE PLUG AND RECEPTACLE
125/250 volts, 30 amperes, 3 pole, 3 wire

© Copyright 2002 by the National Electrical Manufacturers Association.

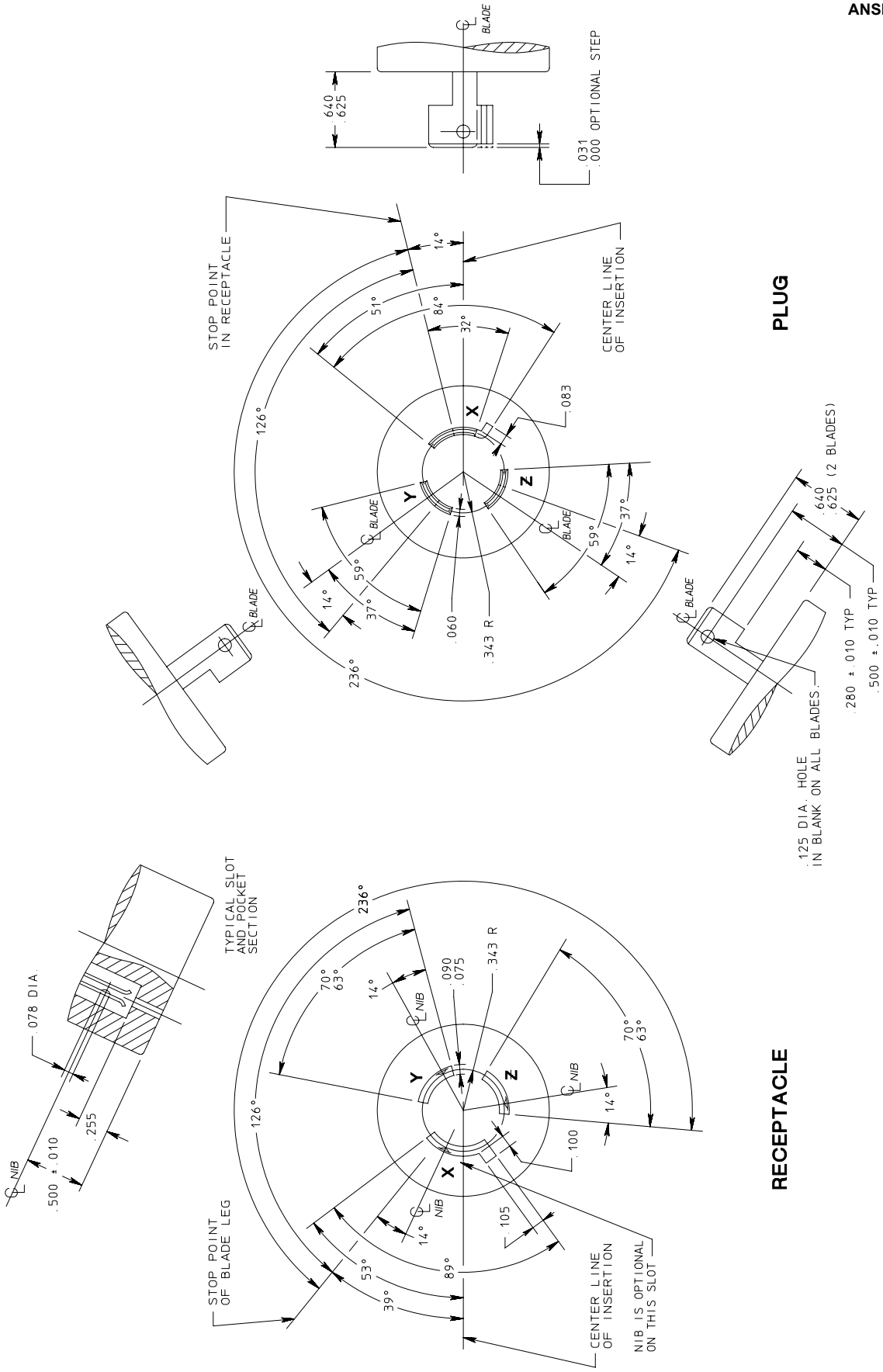

FIGURE L11–15
LOCKING TYPE PLUG AND RECEPTACLE
250 volts, 15 amperes 3 phase, 3 pole, 3 wire

© Copyright 2002 by the National Electrical Manufacturers Association.

FIGURE L11–20
LOCKING TYPE PLUG AND RECEPTACLE
250 volts, 20 amperes, 3 phase, 3 pole, 3 wire

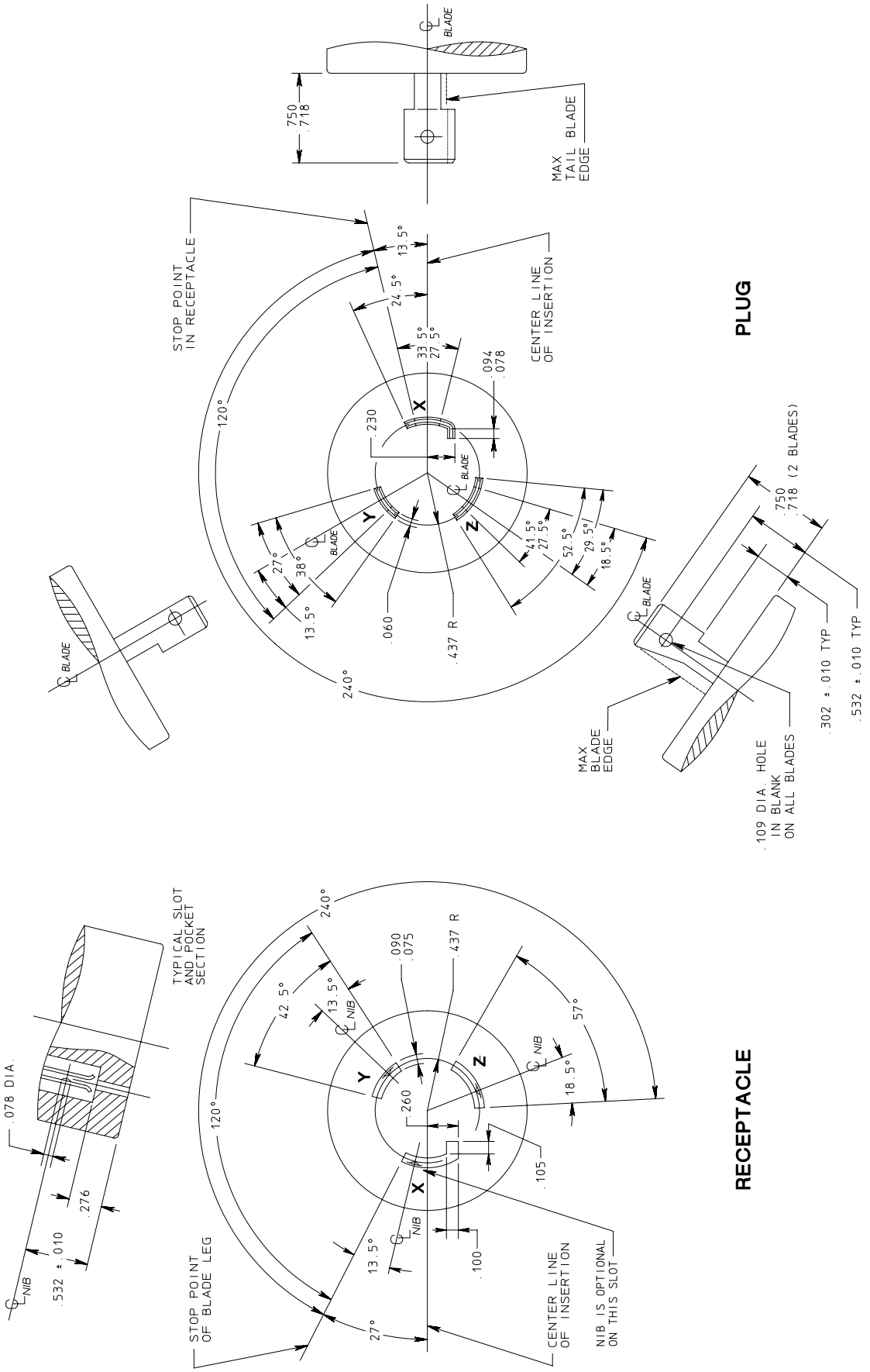

© Copyright 2002 by the National Electrical Manufacturers Association.

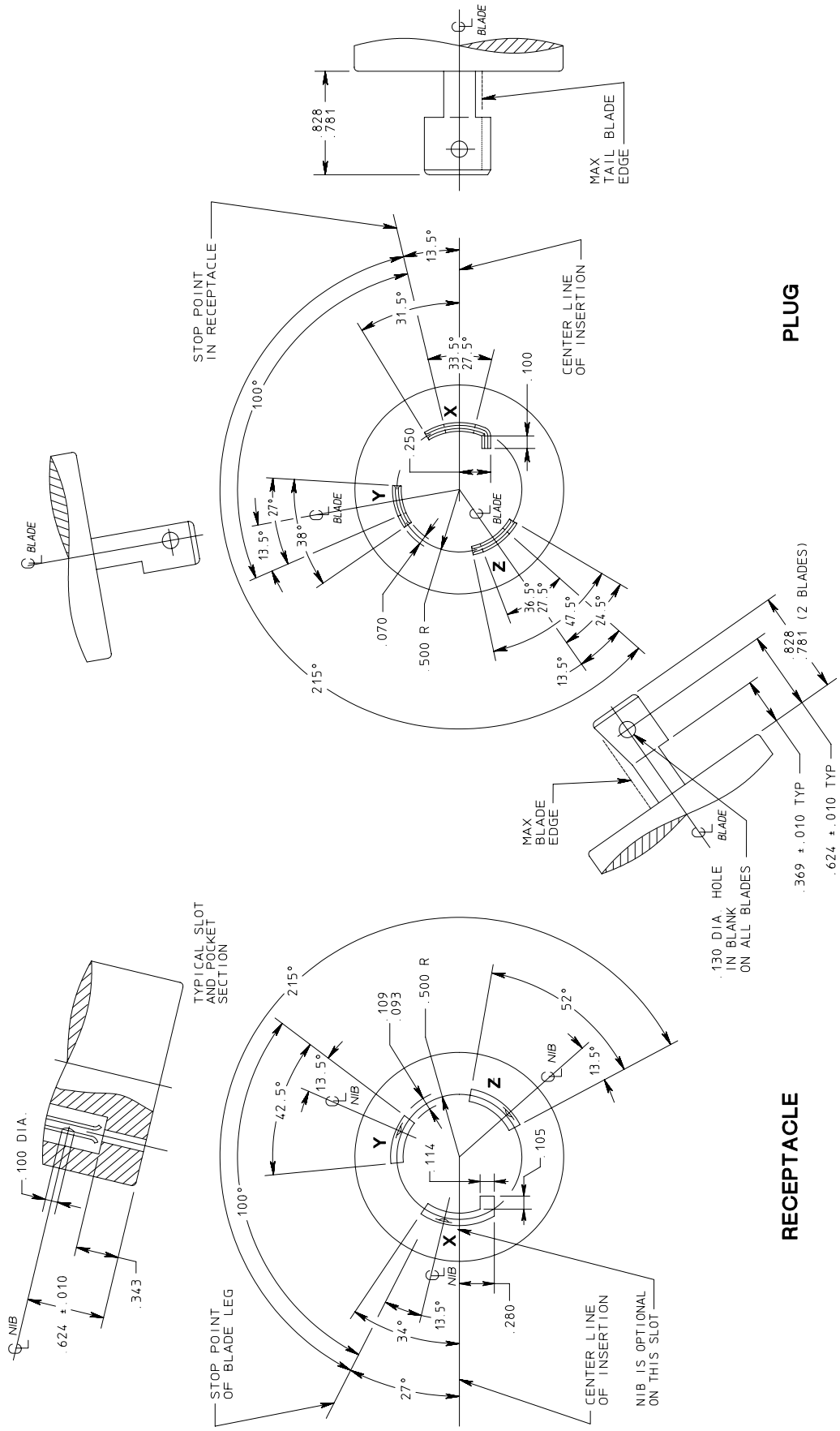

FIGURE L11–30
LOCKING TYPE PLUG AND RECEPTACLE
250 volts, 30 amperes, 3 phase ,3 pole, 3 wire

© Copyright 2002 by the National Electrical Manufacturers Association.

FIGURE L12–20
LOCKING TYPE PLUG AND RECEPTACLE
480 volts , 20 amperes, 3 phase, 3 pole, 3 wire

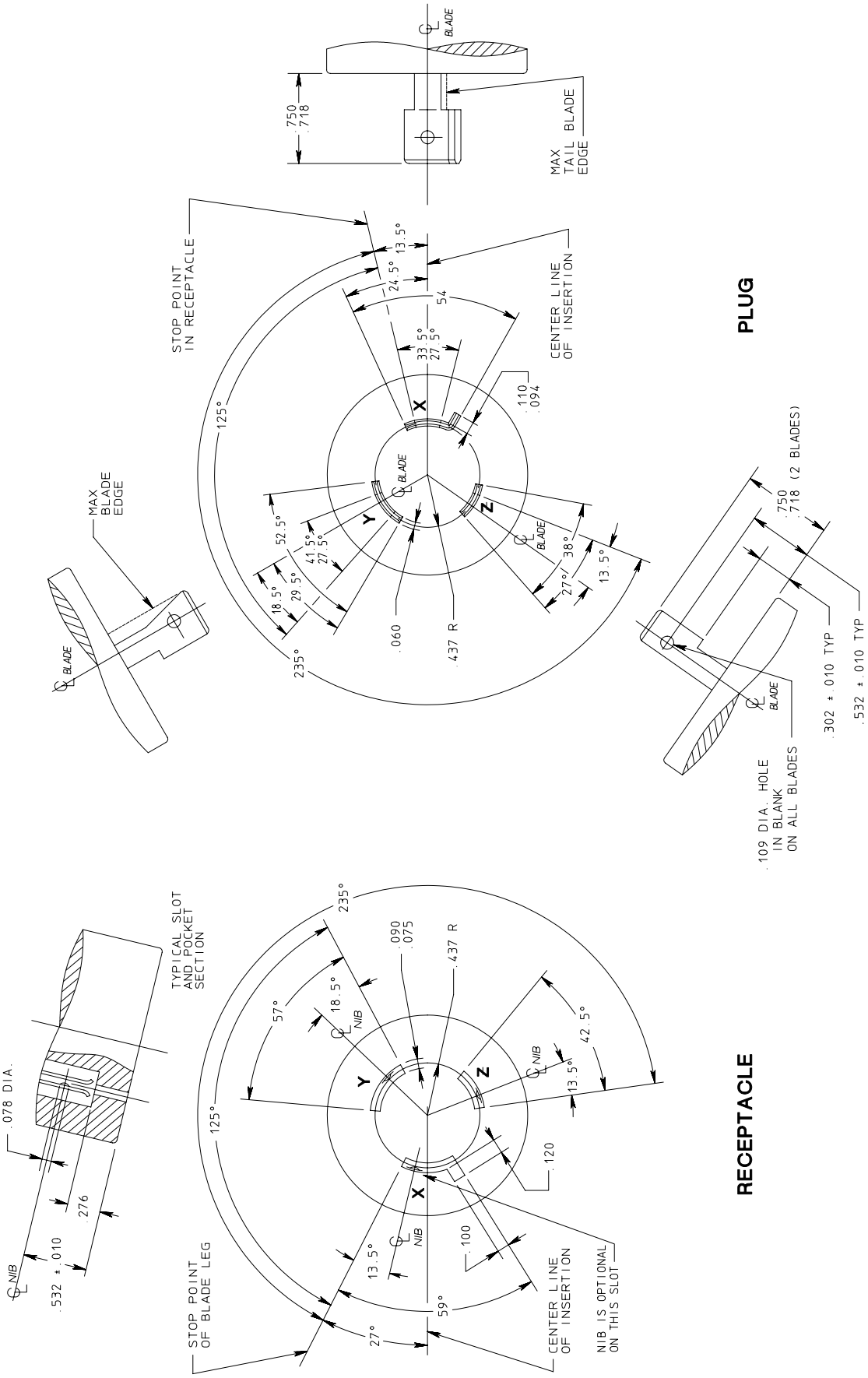

© Copyright 2002 by the National Electrical Manufacturers Association.

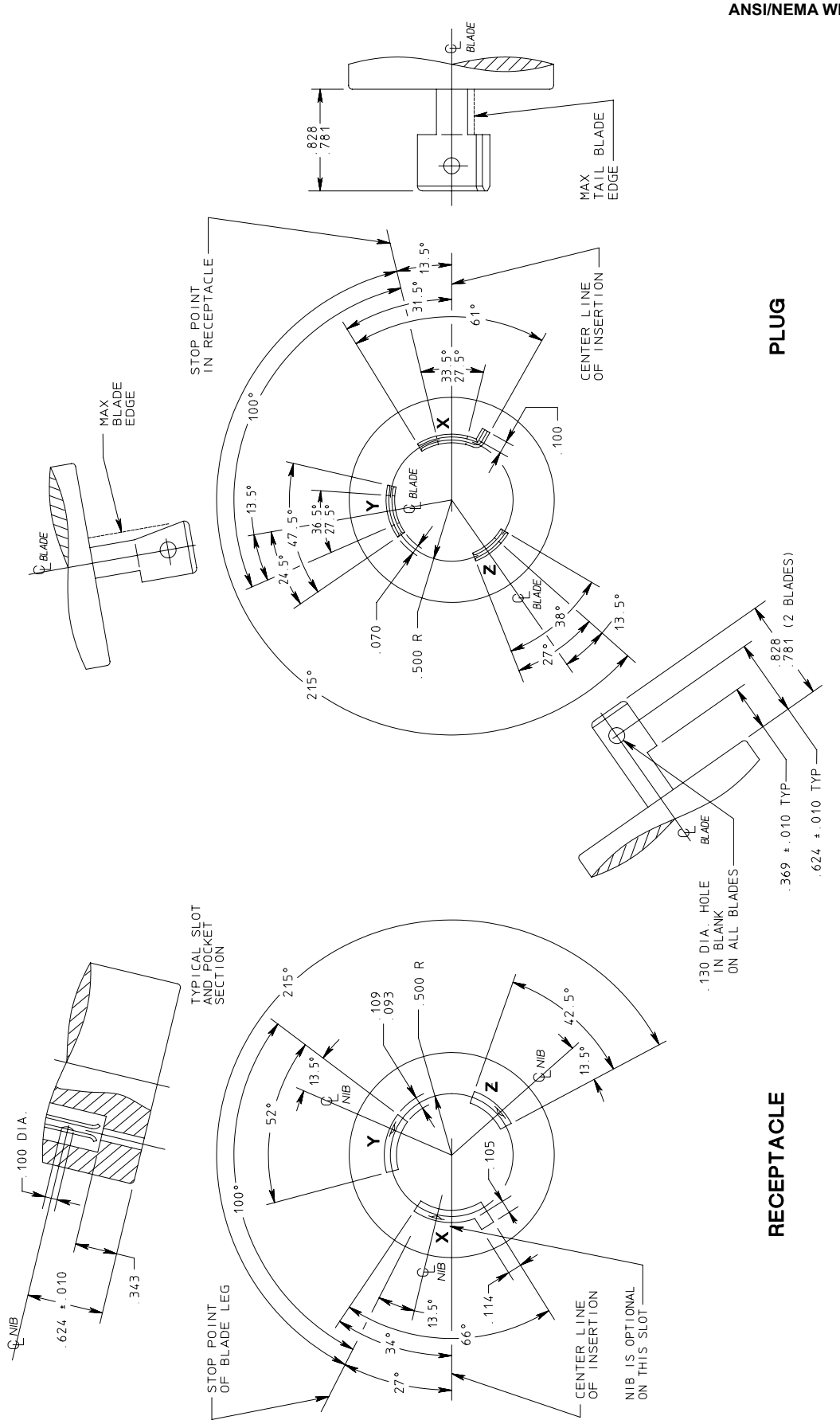

FIGURE L12–30
LOCKING TYPE PLUG AND RECEPTACLE
480 volts , 30 amperes, 3 phase, 3 pole, 3 wire

© Copyright 2002 by the National Electrical Manufacturers Association.

FIGURE L13–30
LOCKING TYPE PLUG AND RECEPTACLE
600 volts, 30 amperes, 3 phase, 3 pole, 3 wire

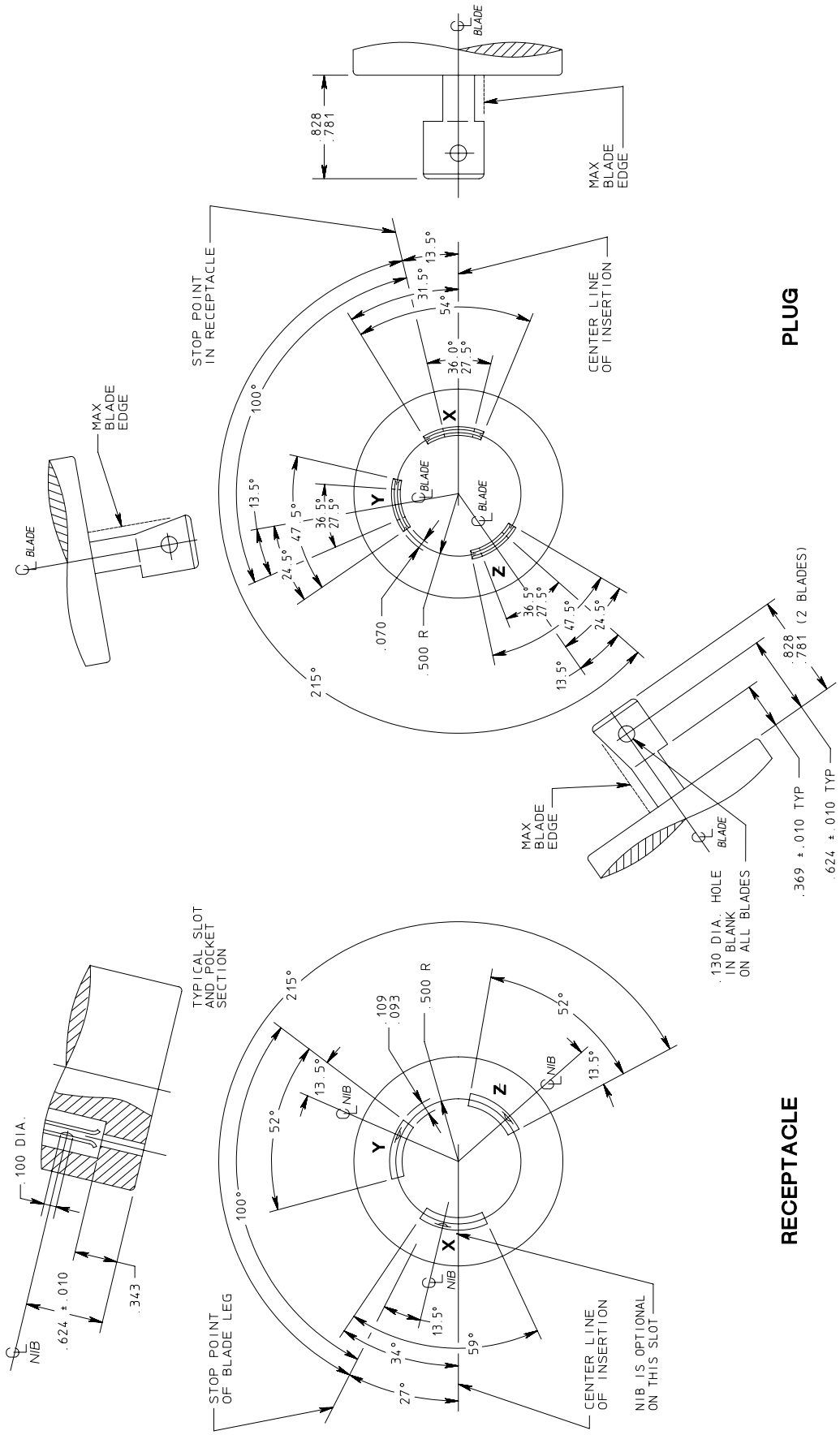

© Copyright 2002 by the National Electrical Manufacturers Association.

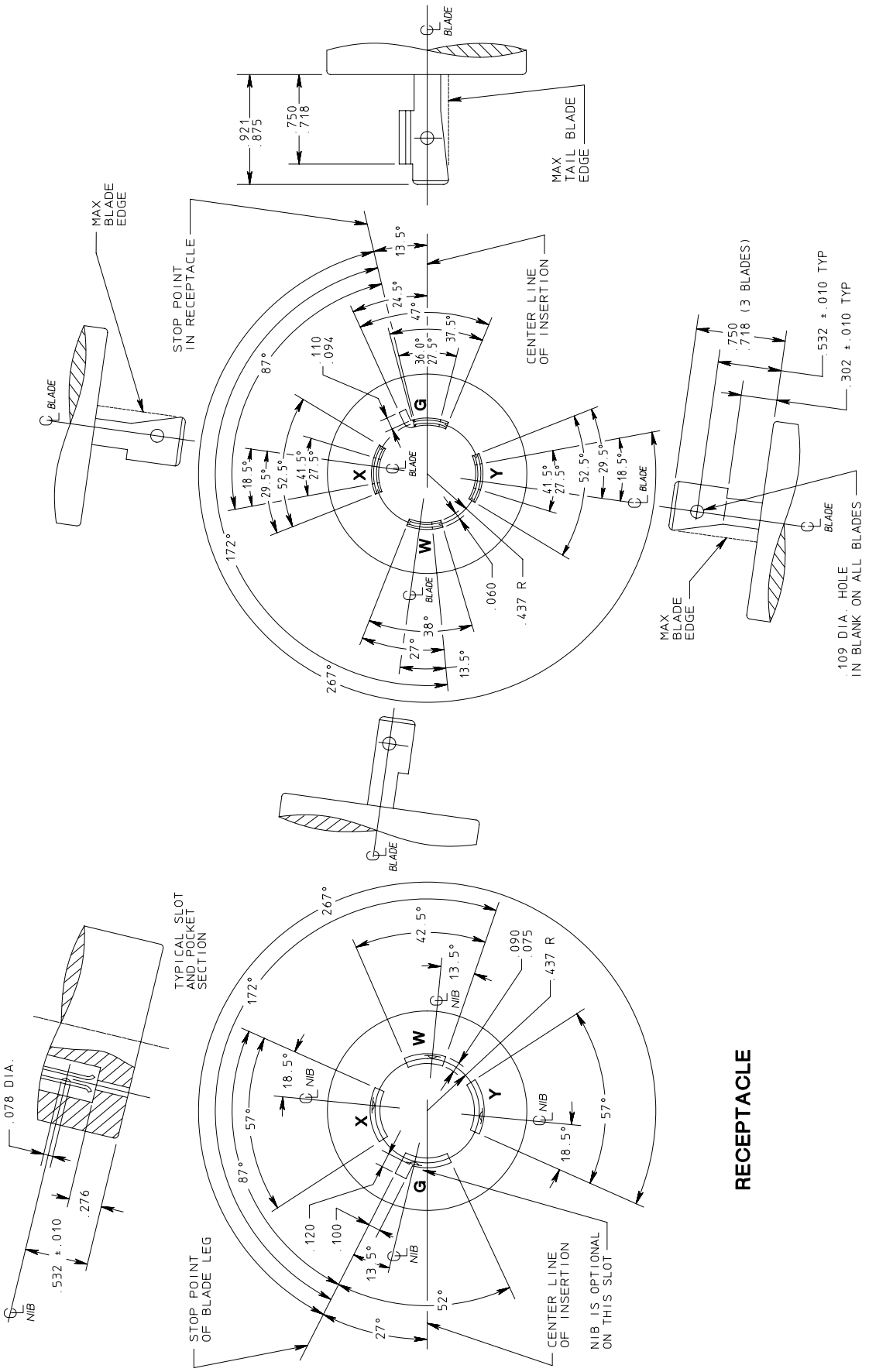

FIGURE L14–20
LOCKING TYPE PLUG AND RECEPTACLE
125/250 volts, 20 amperes, 3 pole, 4 wire, Grounding type

© Copyright 2002 by the National Electrical Manufacturers Association.

FIGURE L14–30
LOCKING TYPE PLUG AND RECEPTACLE
125/250 volts, 30 amperes, 3 pole, 4 wire, Grounding type

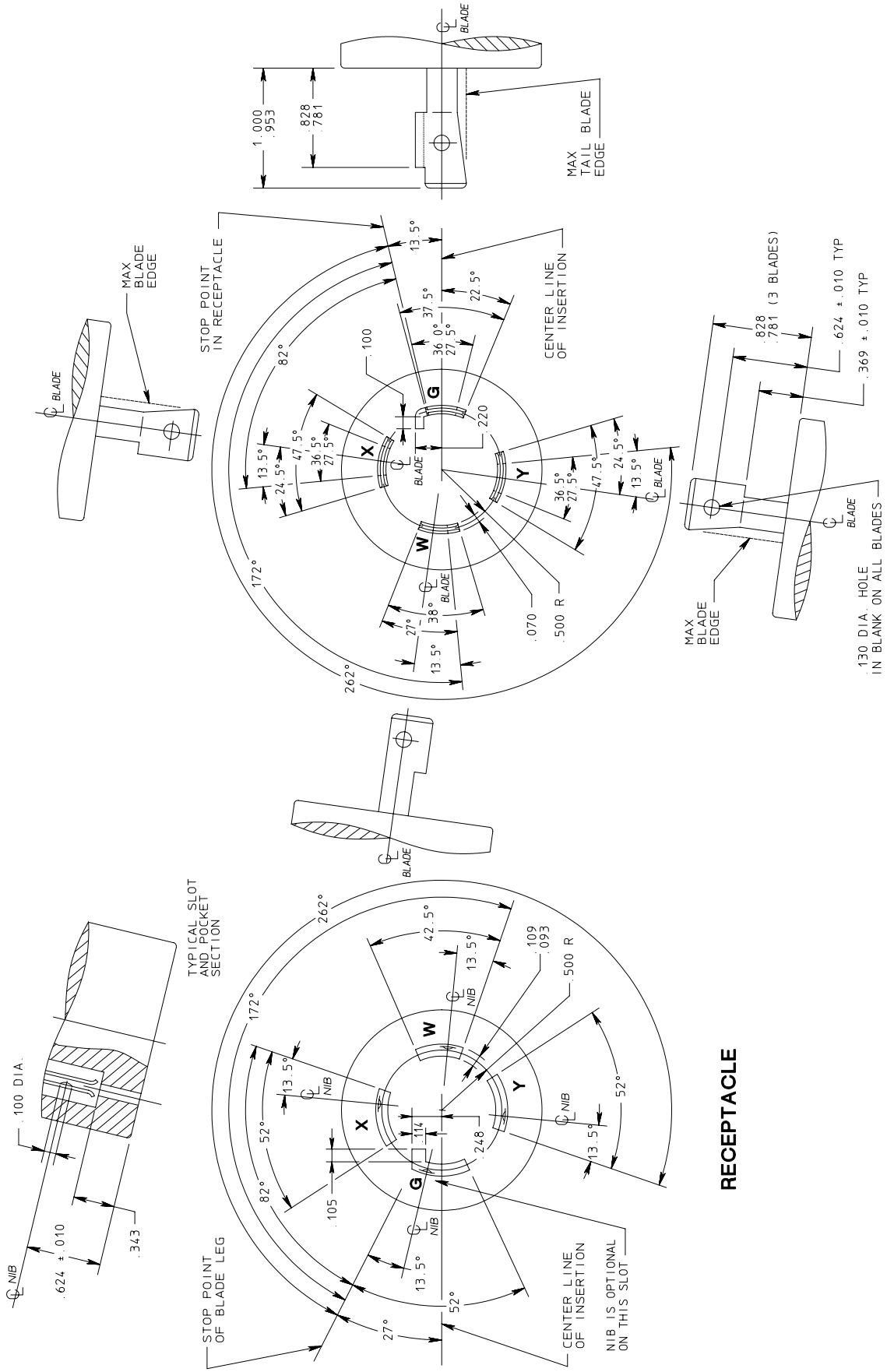

© Copyright 2002 by the National Electrical Manufacturers Association.

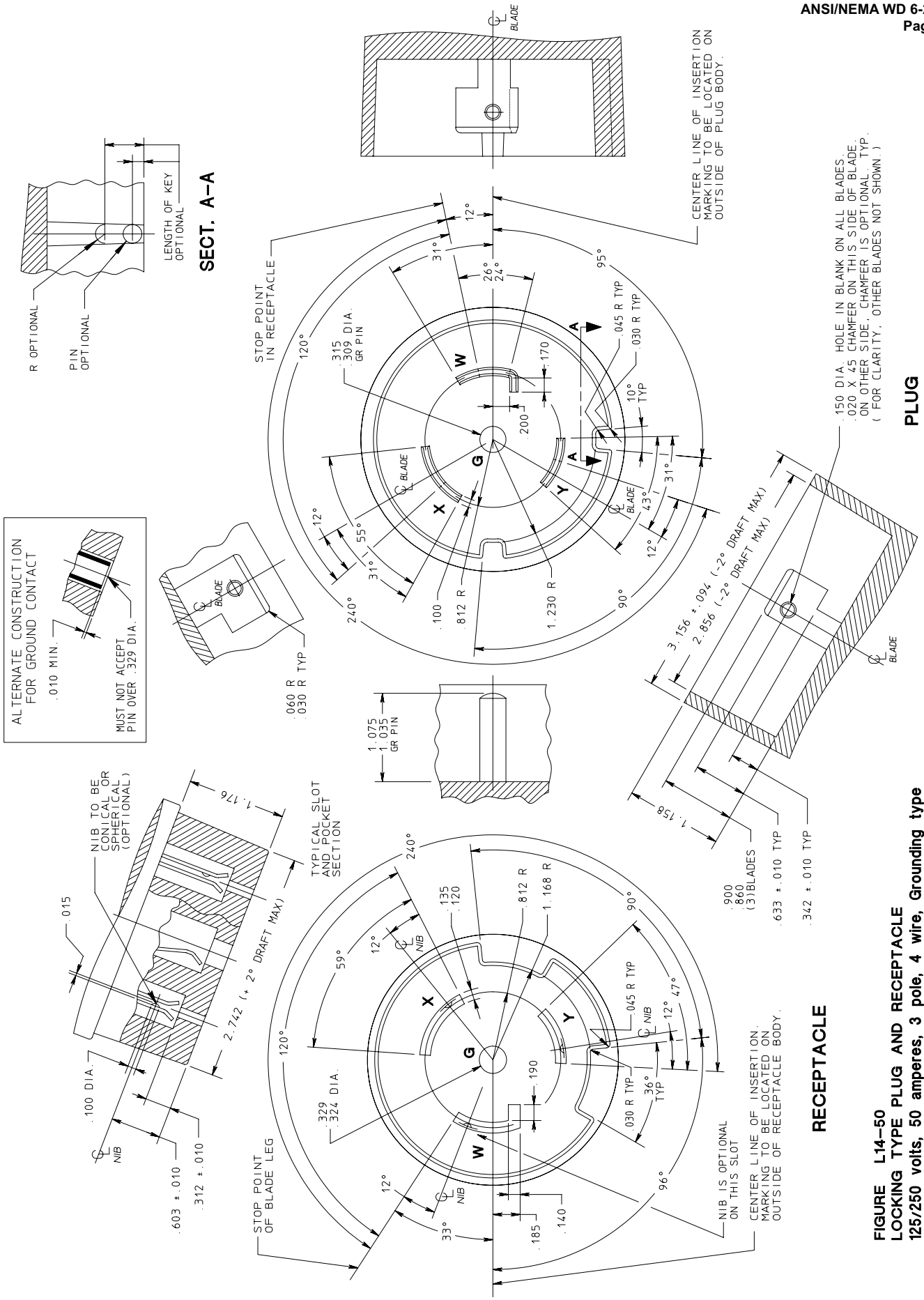

FIGURE L14–50
LOCKING TYPE PLUG AND RECEPTACLE
125/250 volts, 50 amperes, 3 pole, 4 wire, Grounding type

© Copyright 2002 by the National Electrical Manufacturers Association.

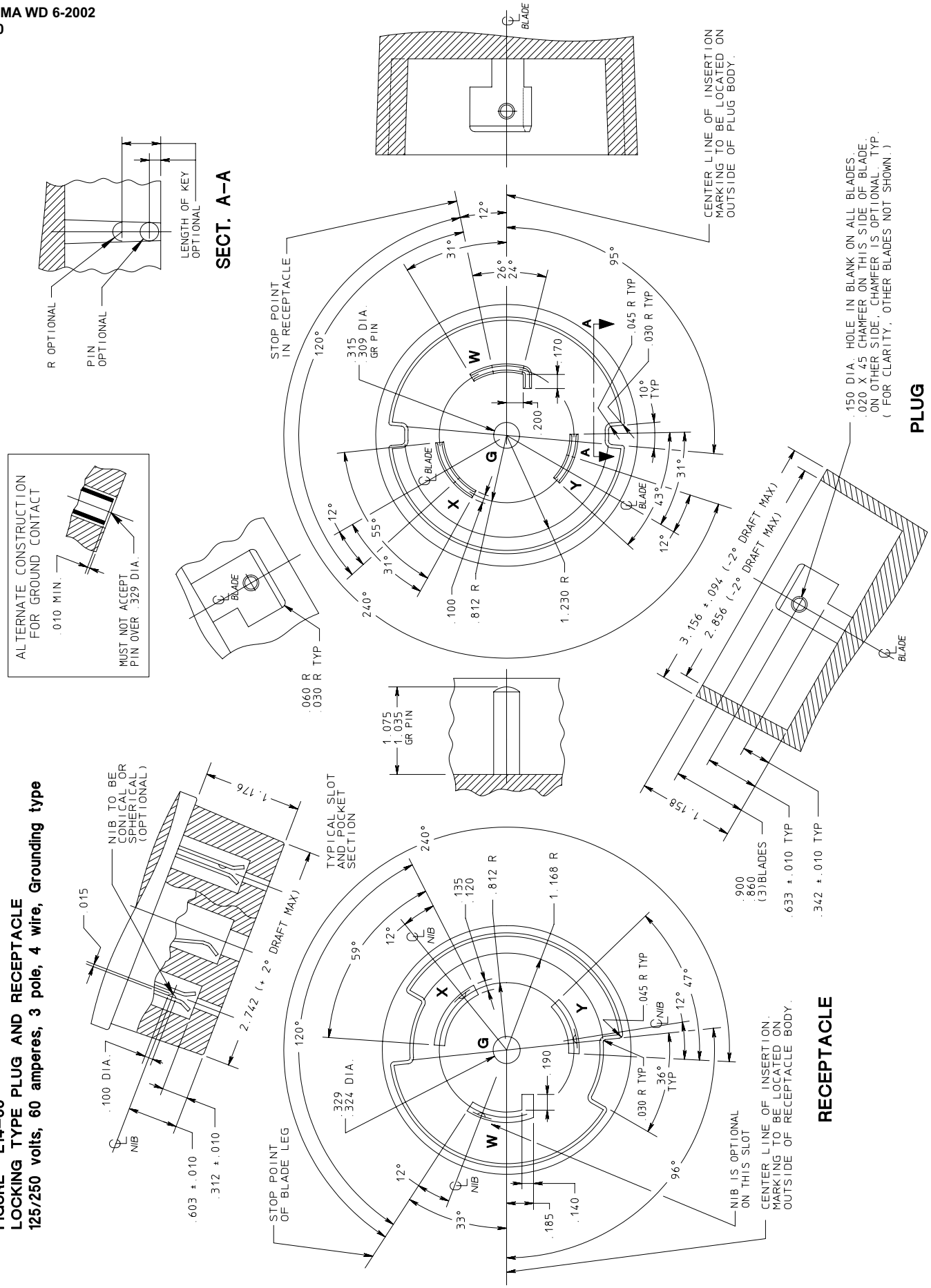

FIGURE L14–60
LOCKING TYPE PLUG AND RECEPTACLE
125/250 volts, 60 amperes, 3 pole, 4 wire, Grounding type

© Copyright 2002 by the National Electrical Manufacturers Association.

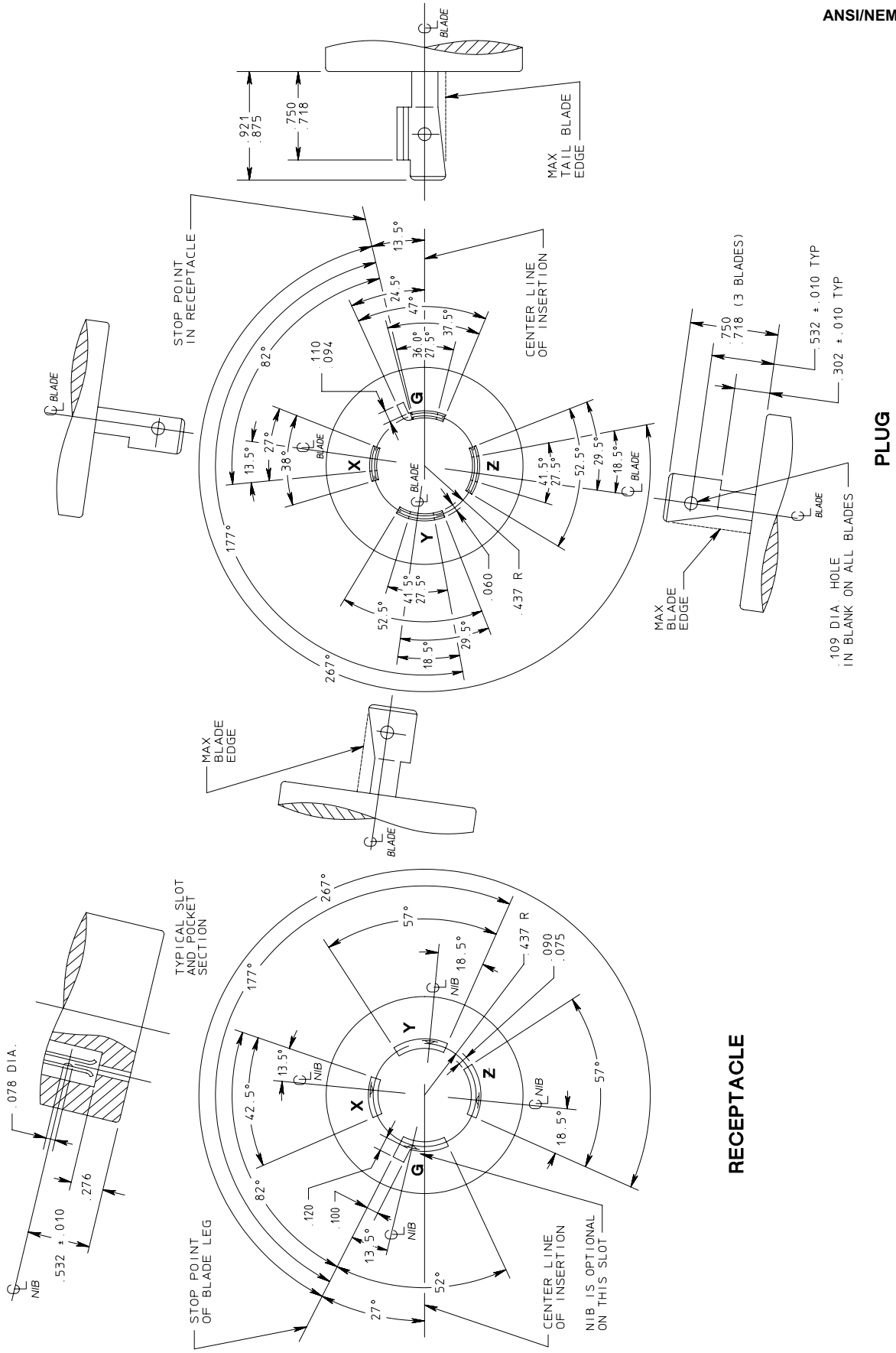

FIGURE L15–20
LOCKING TYPE PLUG AND RECEPTACLE
250 volts, 20 amperes 3 phase, 3 pole, 4 wire, Grounding type

© Copyright 2002 by the National Electrical Manufacturers Association.

FIGURE L15–30
LOCKING TYPE PLUG AND RECEPTACLE
250 volts, 30 amperes, 3 phase, 3 pole, 4 wire, Grounding type

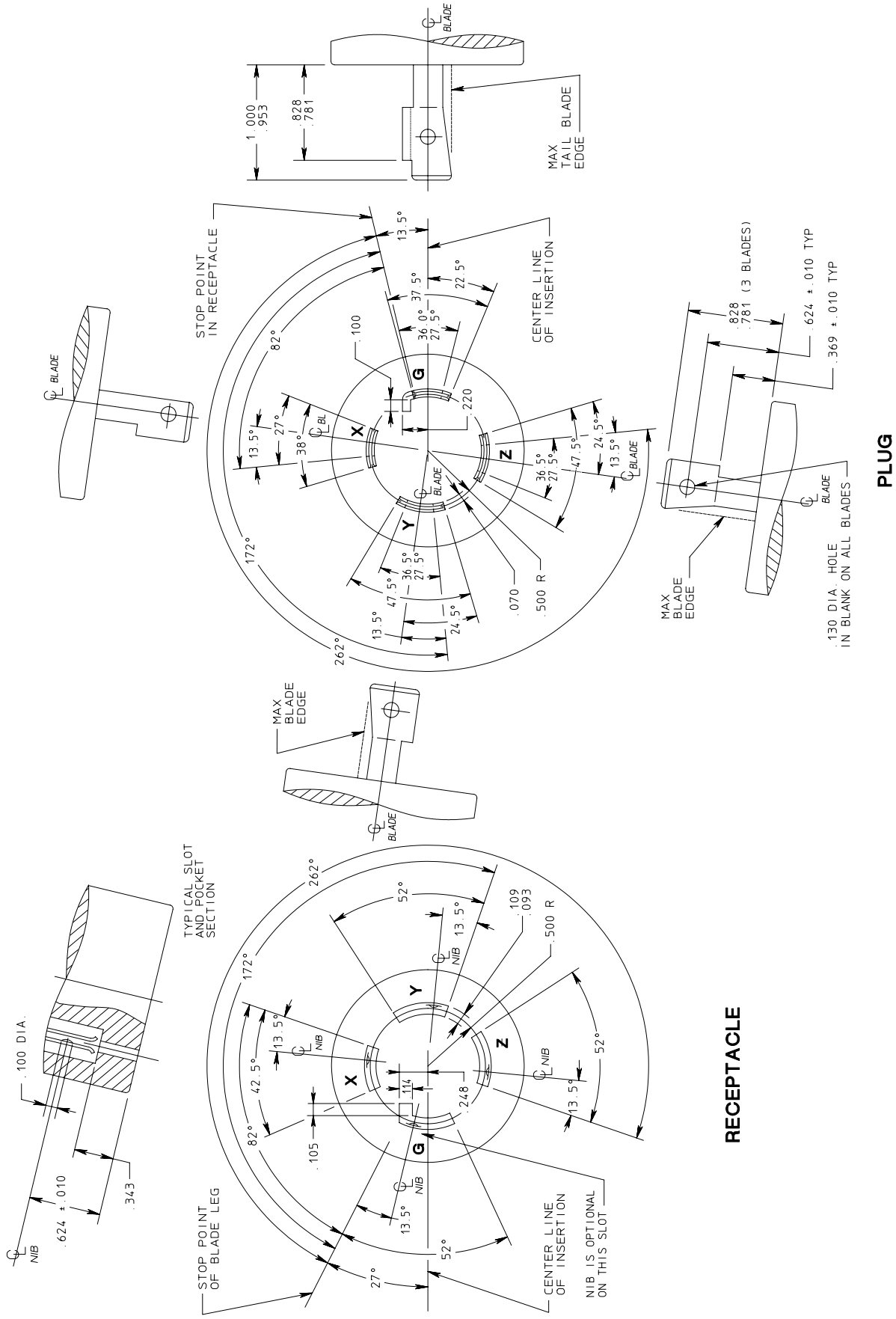

© Copyright 2002 by the National Electrical Manufacturers Association.

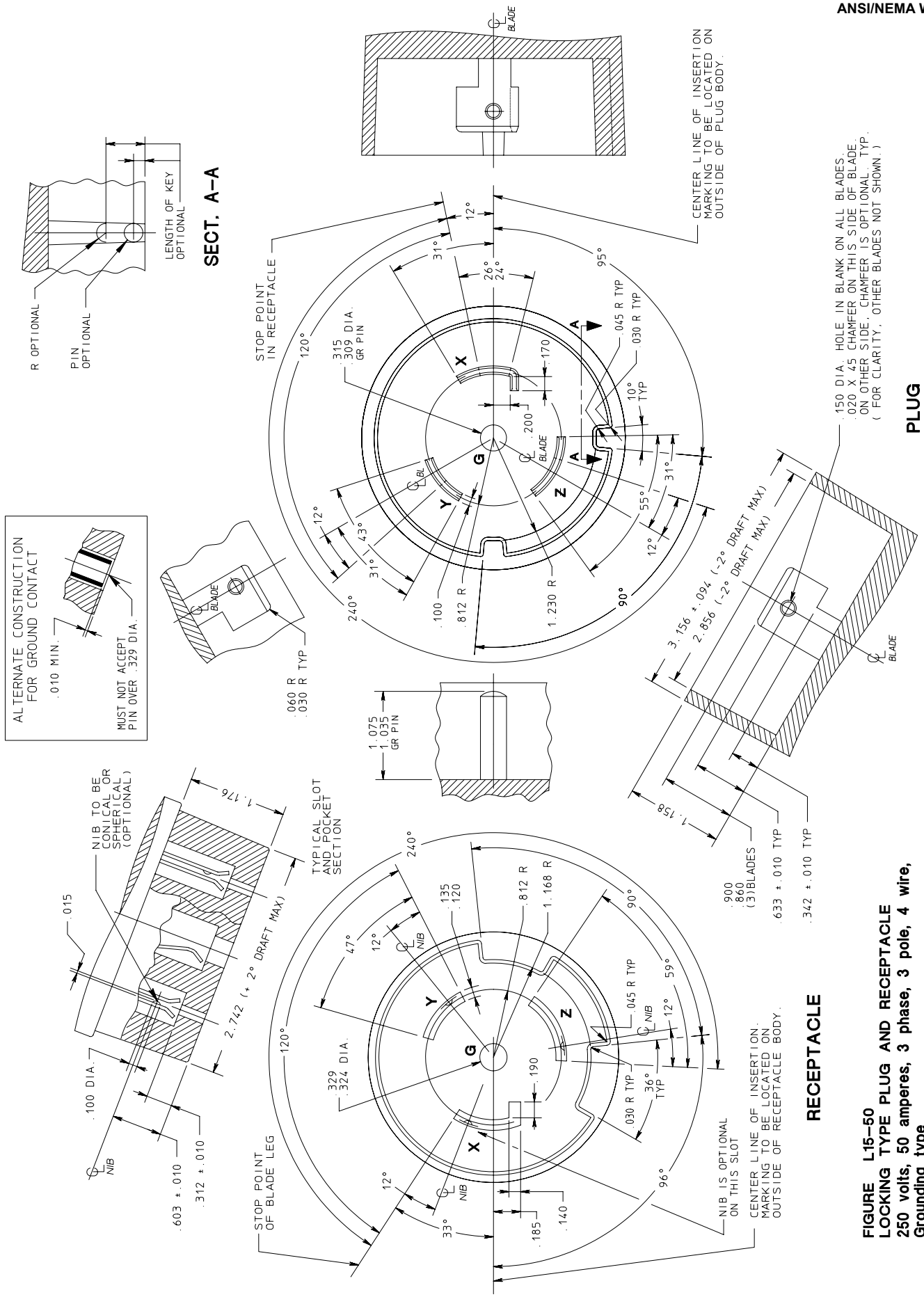

FIGURE L15–50
LOCKING TYPE PLUG AND RECEPTACLE
250 volts, 50 amperes, 3 phase, 3 pole, 4 wire, Grounding type

© Copyright 2002 by the National Electrical Manufacturers Association.

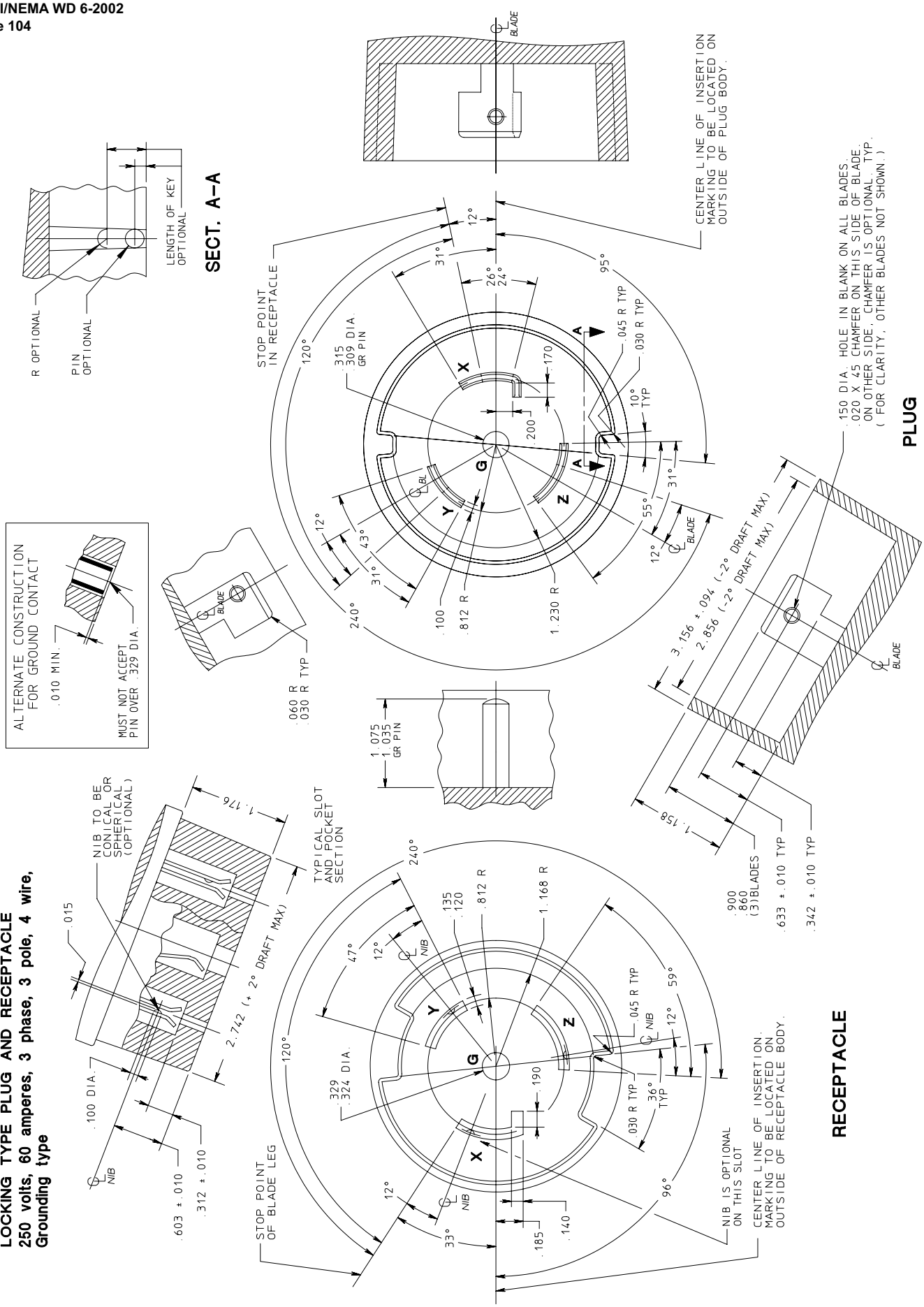

FIGURE L15–60
LOCKING TYPE PLUG AND RECEPTACLE
250 volts, 60 amperes, 3 phase, 3 pole, 4 wire, Grounding type

© Copyright 2002 by the National Electrical Manufacturers Association.

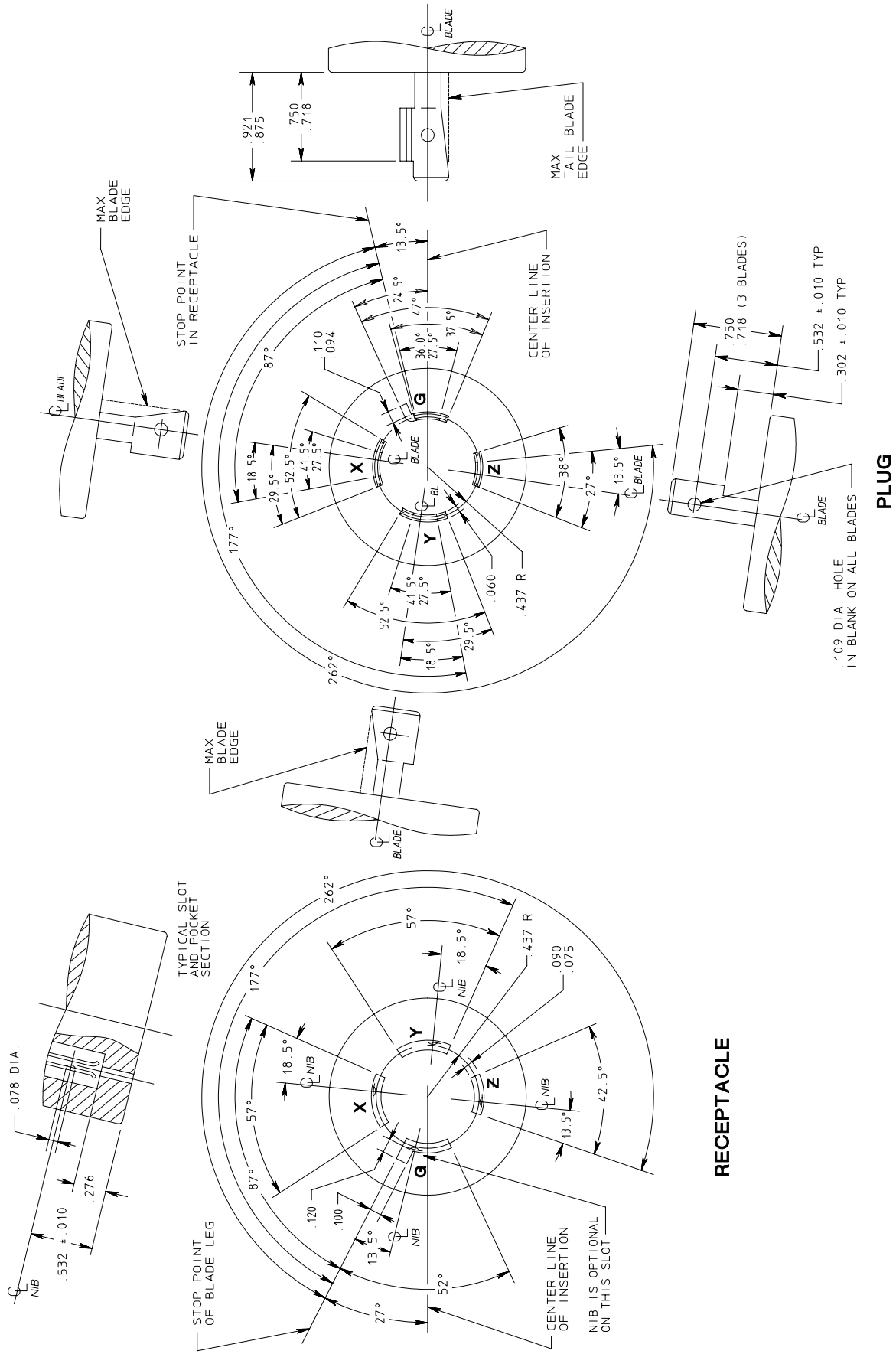

FIGURE L16–20
LOCKING TYPE PLUG AND RECEPTACLE
480 volts, 20 amperes, 3 phase, 3 pole, 4 wire, Grounding type

© Copyright 2002 by the National Electrical Manufacturers Association.

FIGURE L16–30
LOCKING TYPE PLUG AND RECEPTACLE
480 volts, 30 amperes, 3 phase, 3 pole, 4 wire, Grounding type

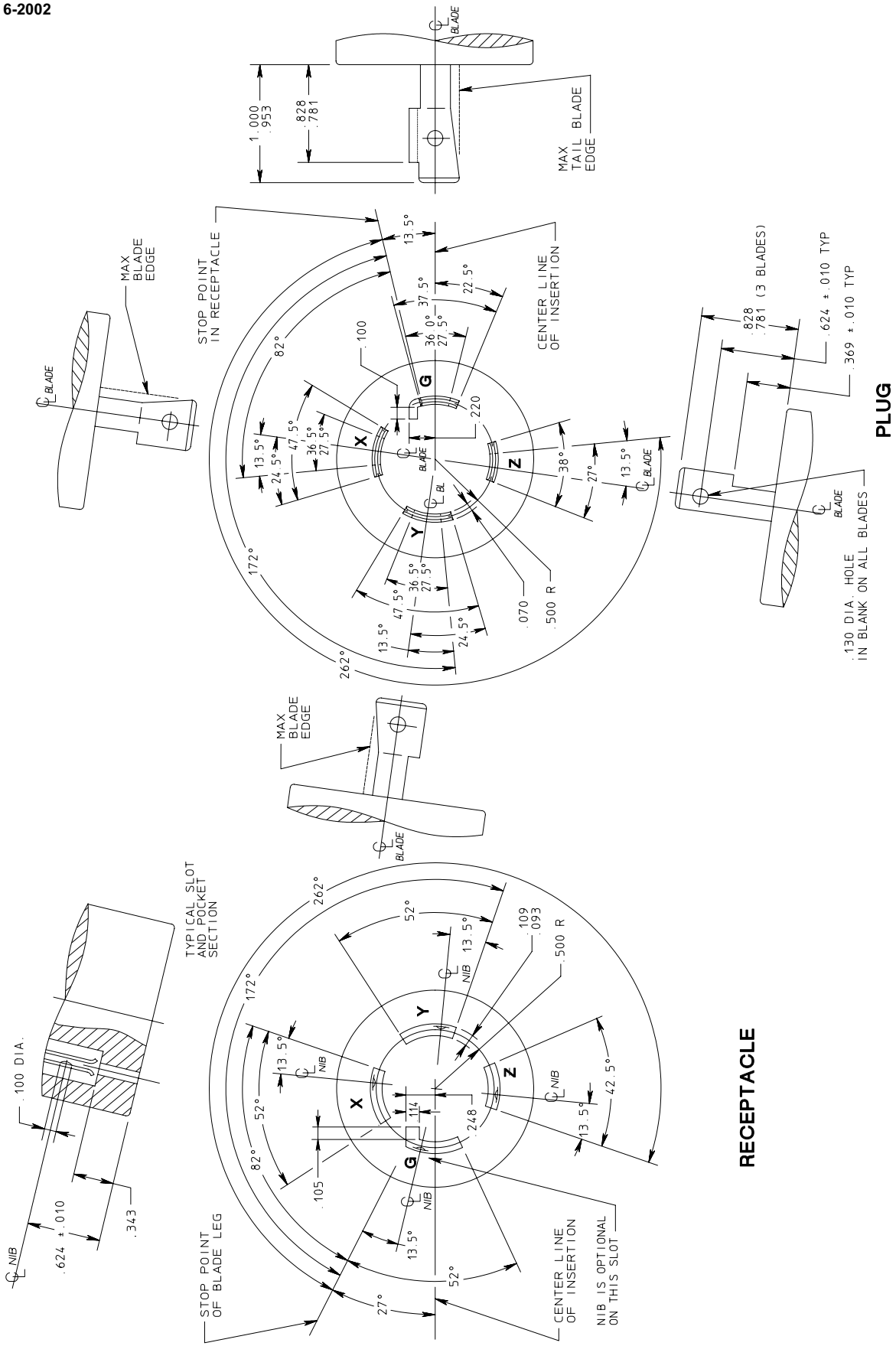

© Copyright 2002 by the National Electrical Manufacturers Association.

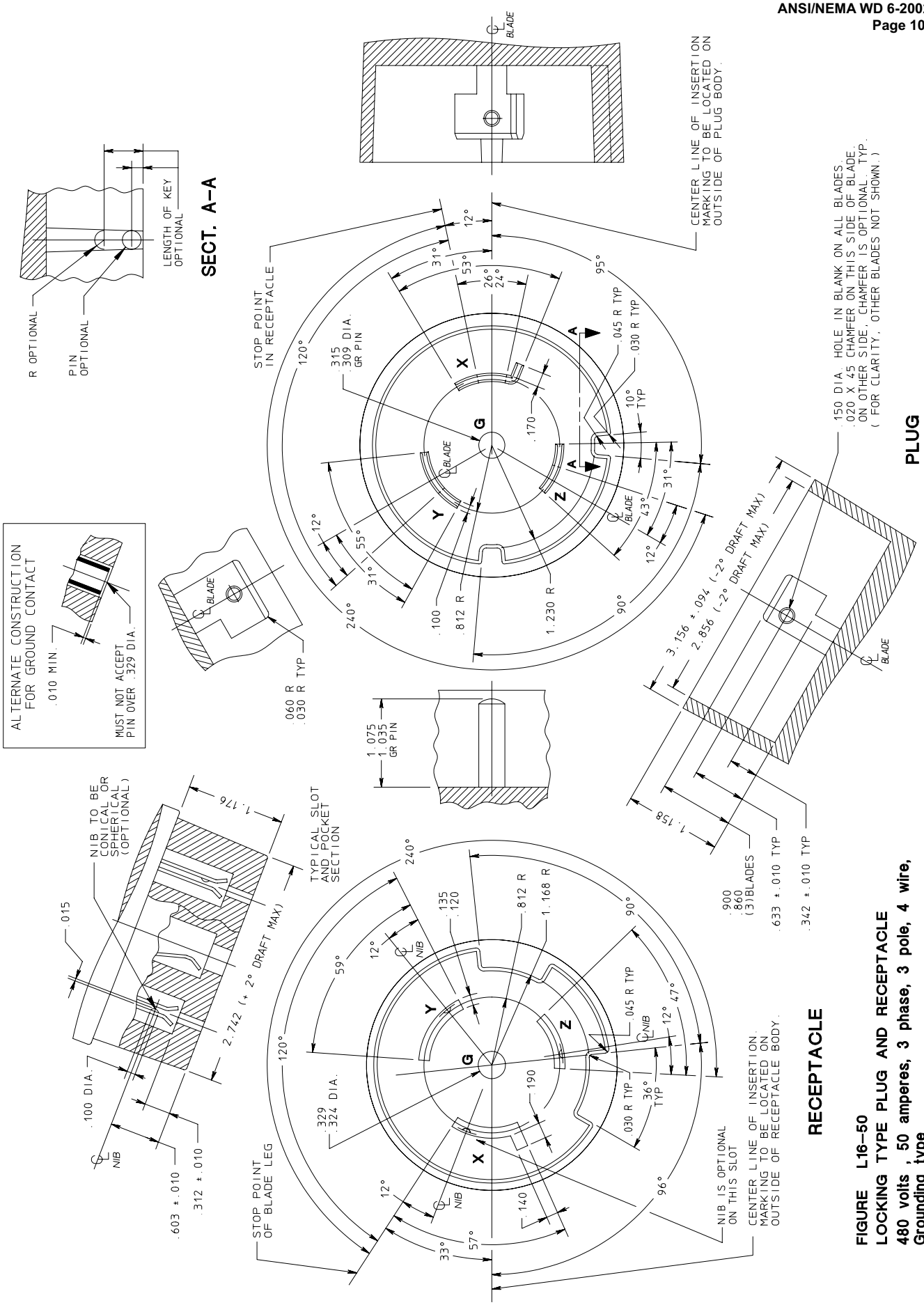

FIGURE L16–50
LOCKING TYPE PLUG AND RECEPTACLE
480 volts , 50 amperes, 3 phase, 3 pole, 4 wire, Grounding type

© Copyright 2002 by the National Electrical Manufacturers Association.

FIGURE L16–60
LOCKING TYPE PLUG AND RECEPTACLE
480 volts , 60 amperes, 3 phase, 3 pole, 4 wire, Grounding type

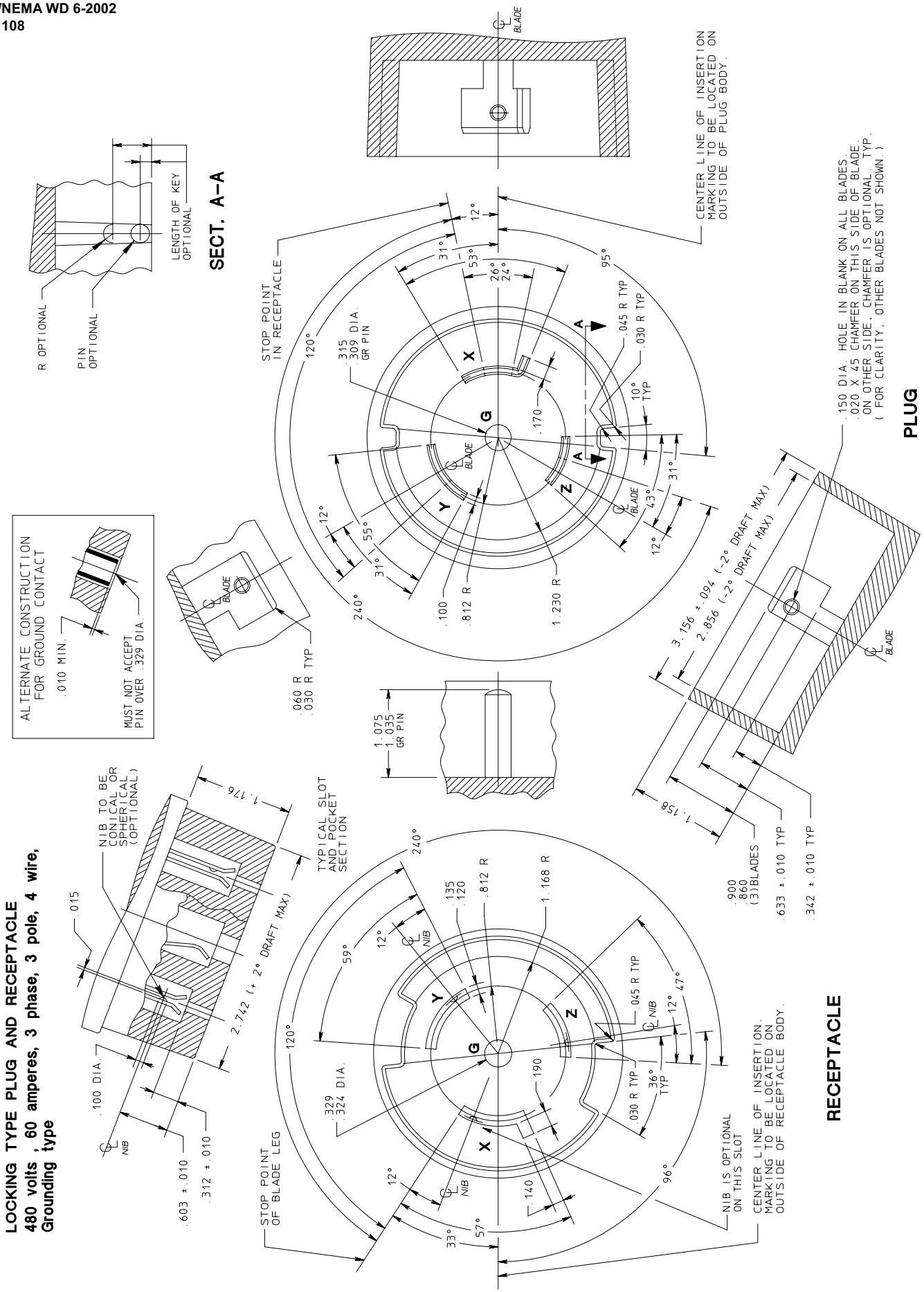

© Copyright 2002 by the National Electrical Manufacturers Association.

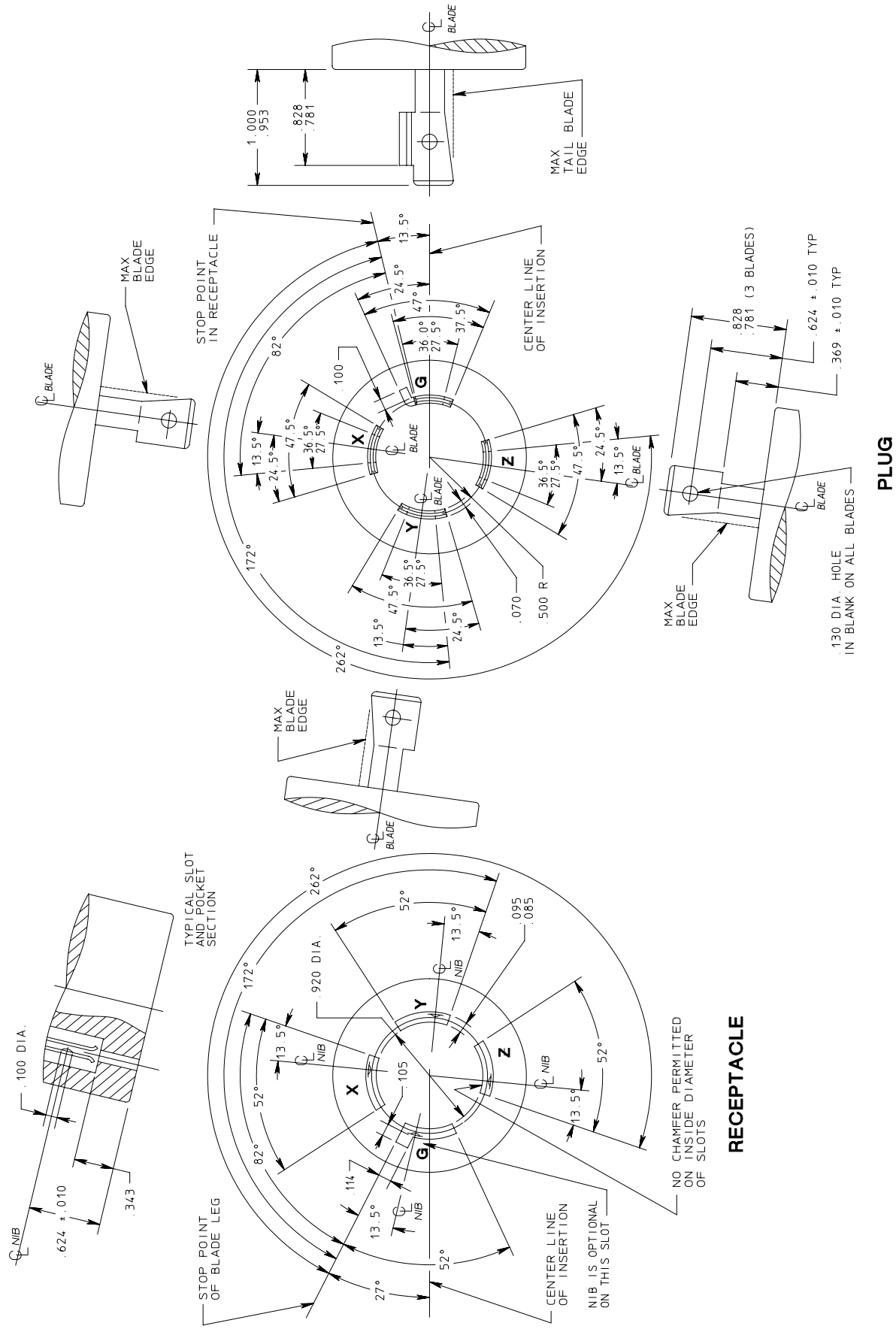

FIGURE L17–30
LOCKING TYPE PLUG AND RECEPTACLE
600 volts, 30 amperes, 3 phase, 3 pole, 4 wire, Grounding type

© Copyright 2002 by the National Electrical Manufacturers Association.

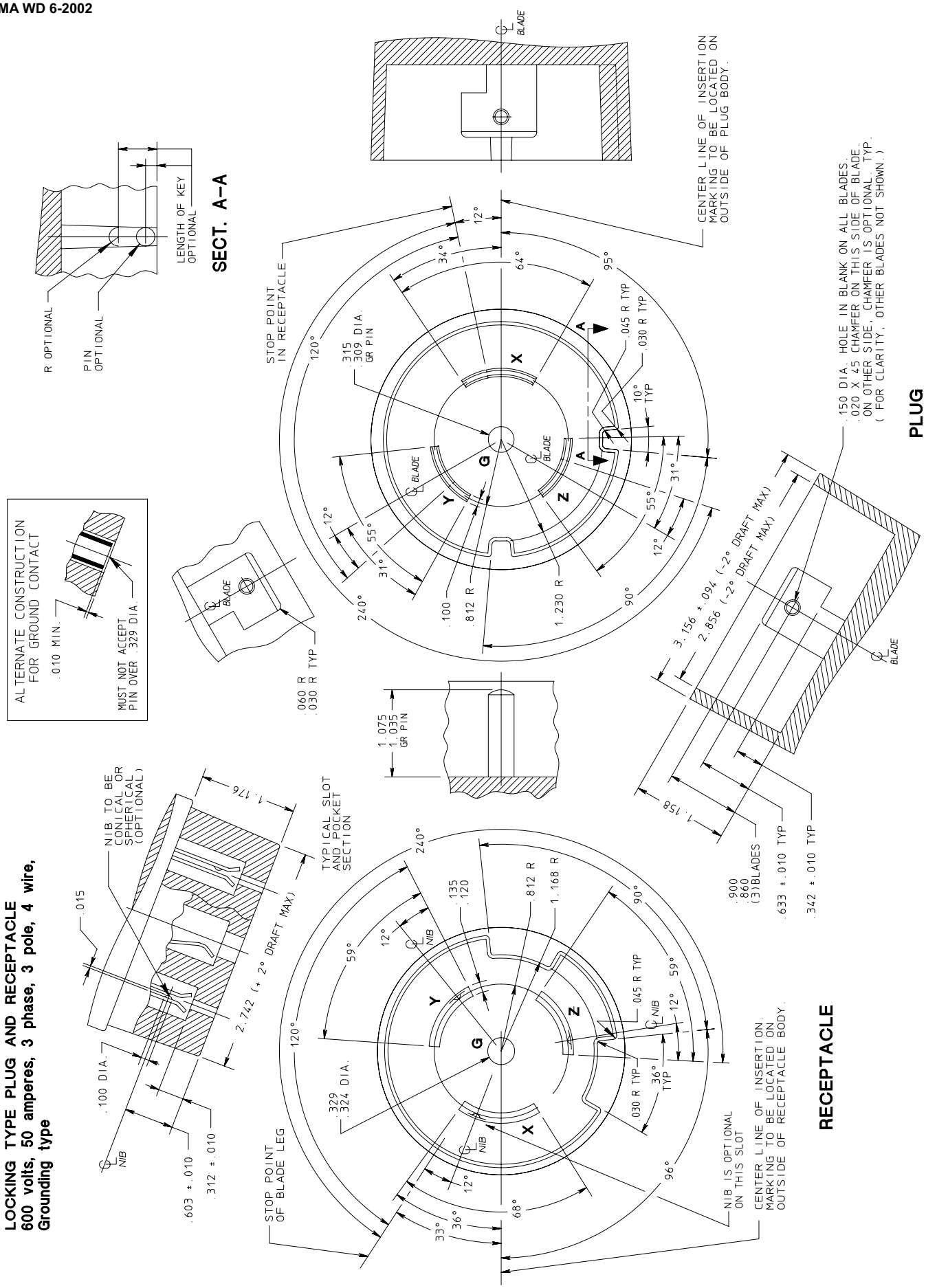

FIGURE L17–50
LOCKING TYPE PLUG AND RECEPTACLE
600 volts, 50 amperes, 3 phase, 3 pole, 4 wire, Grounding type

© Copyright 2002 by the National Electrical Manufacturers Association.

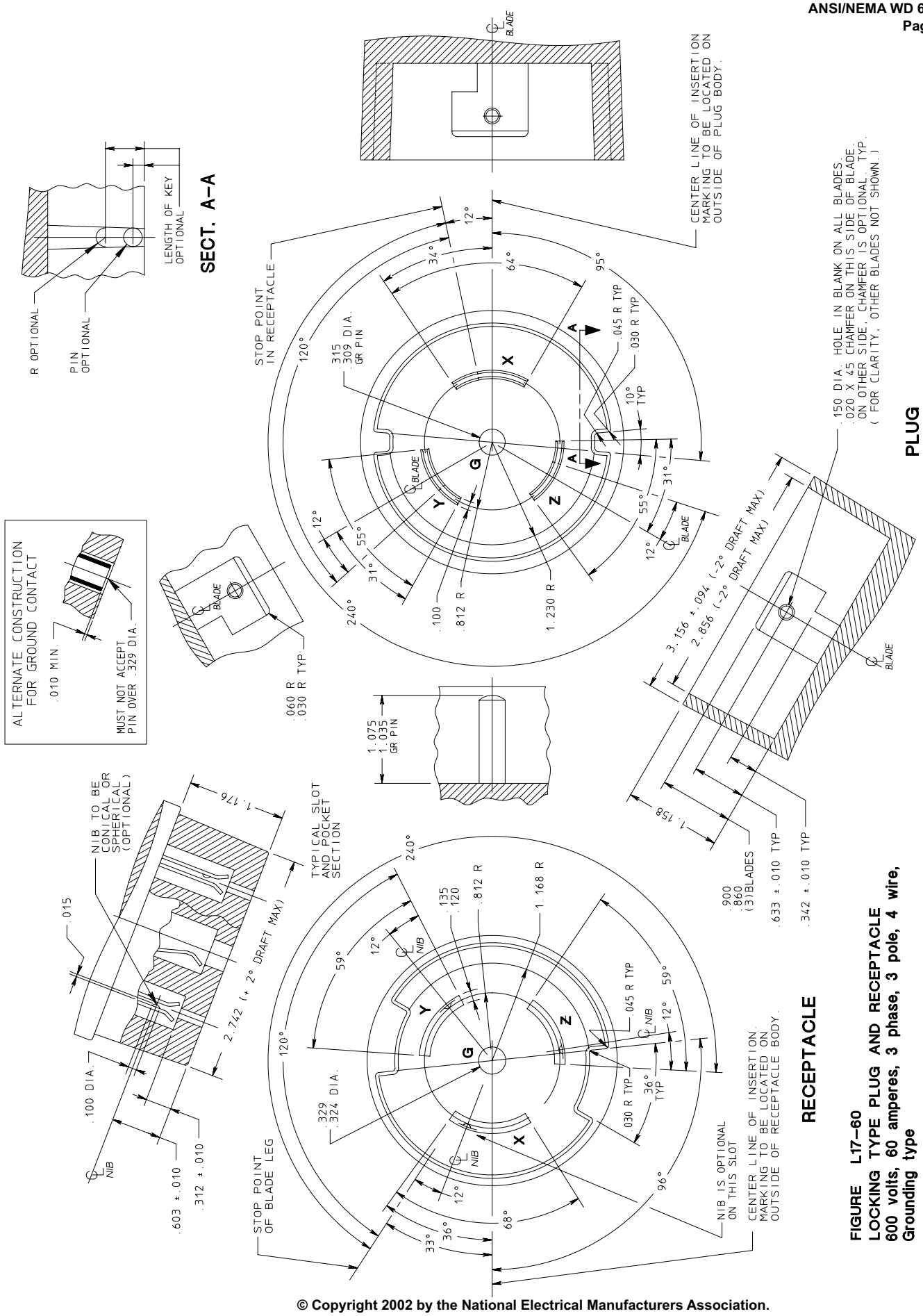

FIGURE L17–60
LOCKING TYPE PLUG AND RECEPTACLE
600 volts, 60 amperes, 3 phase, 3 pole, 4 wire, Grounding type

© Copyright 2002 by the National Electrical Manufacturers Association.

FIGURE L18–20
LOCKING TYPE PLUG AND RECEPTACLE
120/208 volts, 20 amperes, 3 phase Y, 4 pole, 4 wire

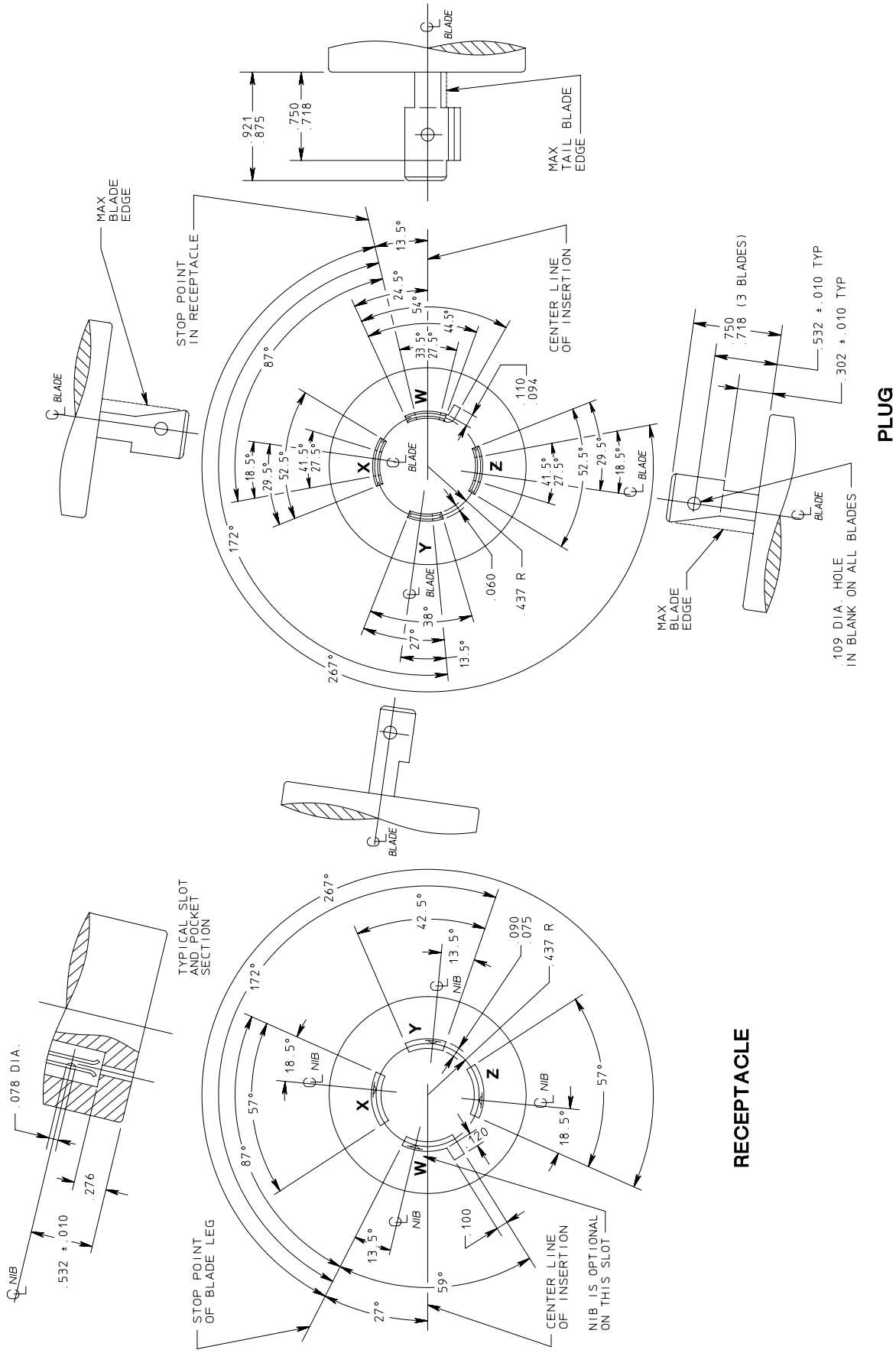

© Copyright 2002 by the National Electrical Manufacturers Association.

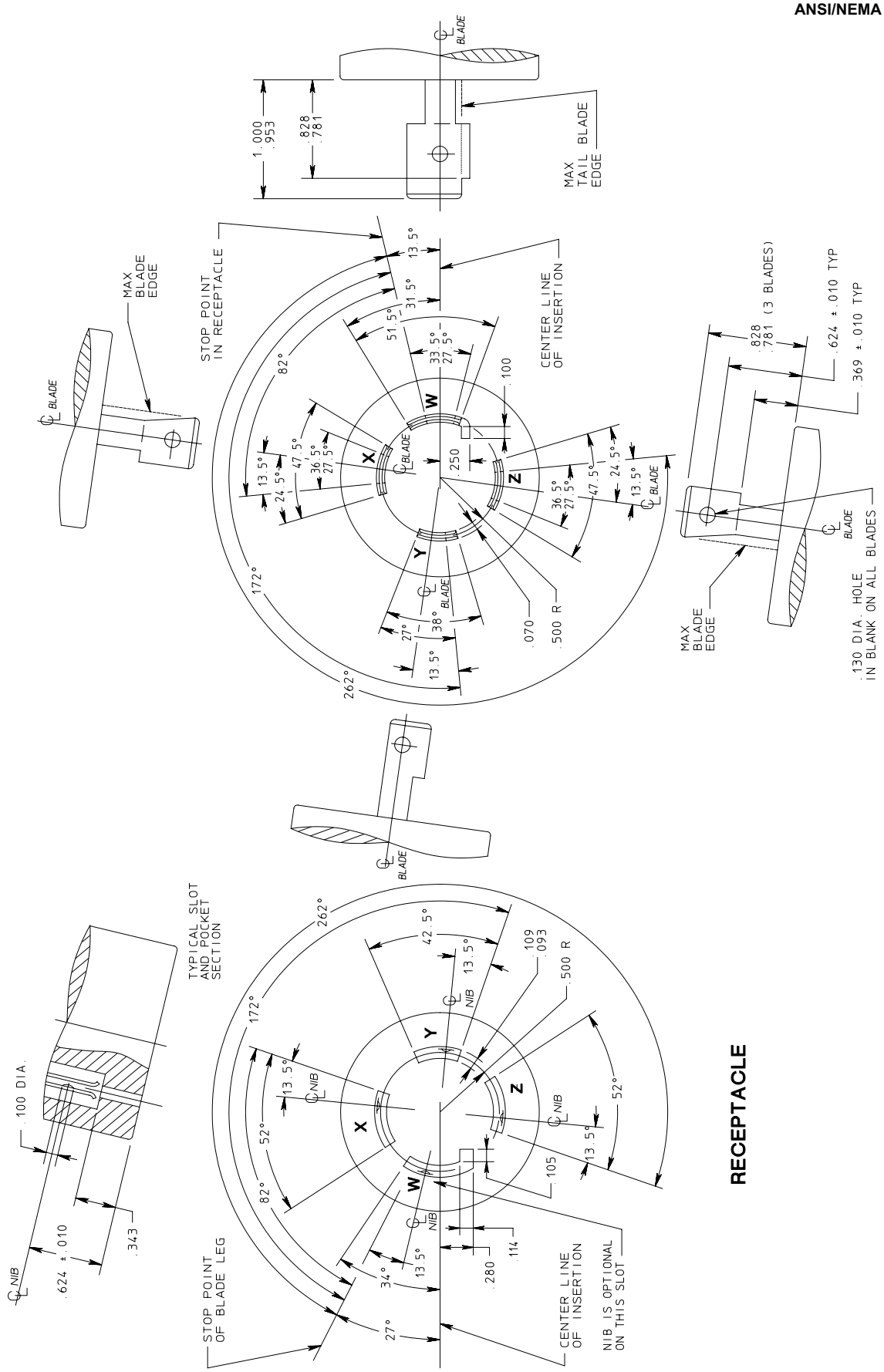

FIGURE L18–30
LOCKING TYPE PLUG AND RECEPTACLE
120/208 volts, 30 amperes, 3 phase Y, 4 pole, 4 wire

© Copyright 2002 by the National Electrical Manufacturers Association.

FIGURE L19–20
LOCKING TYPE PLUG AND RECEPTACLE
277/480 volts, 20 amperes, 3 phase Y, 4 pole, 4 wire

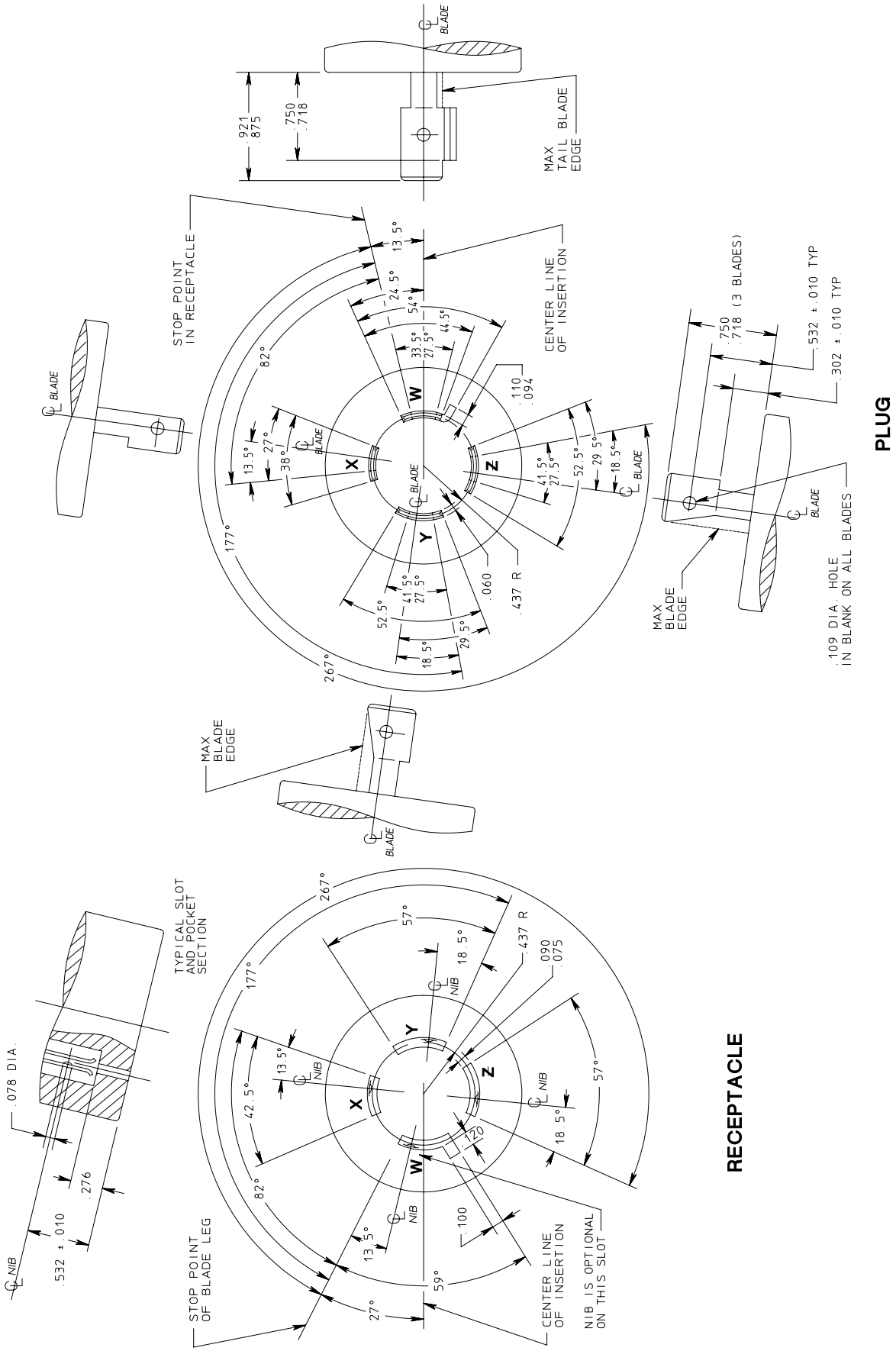

© Copyright 2002 by the National Electrical Manufacturers Association.

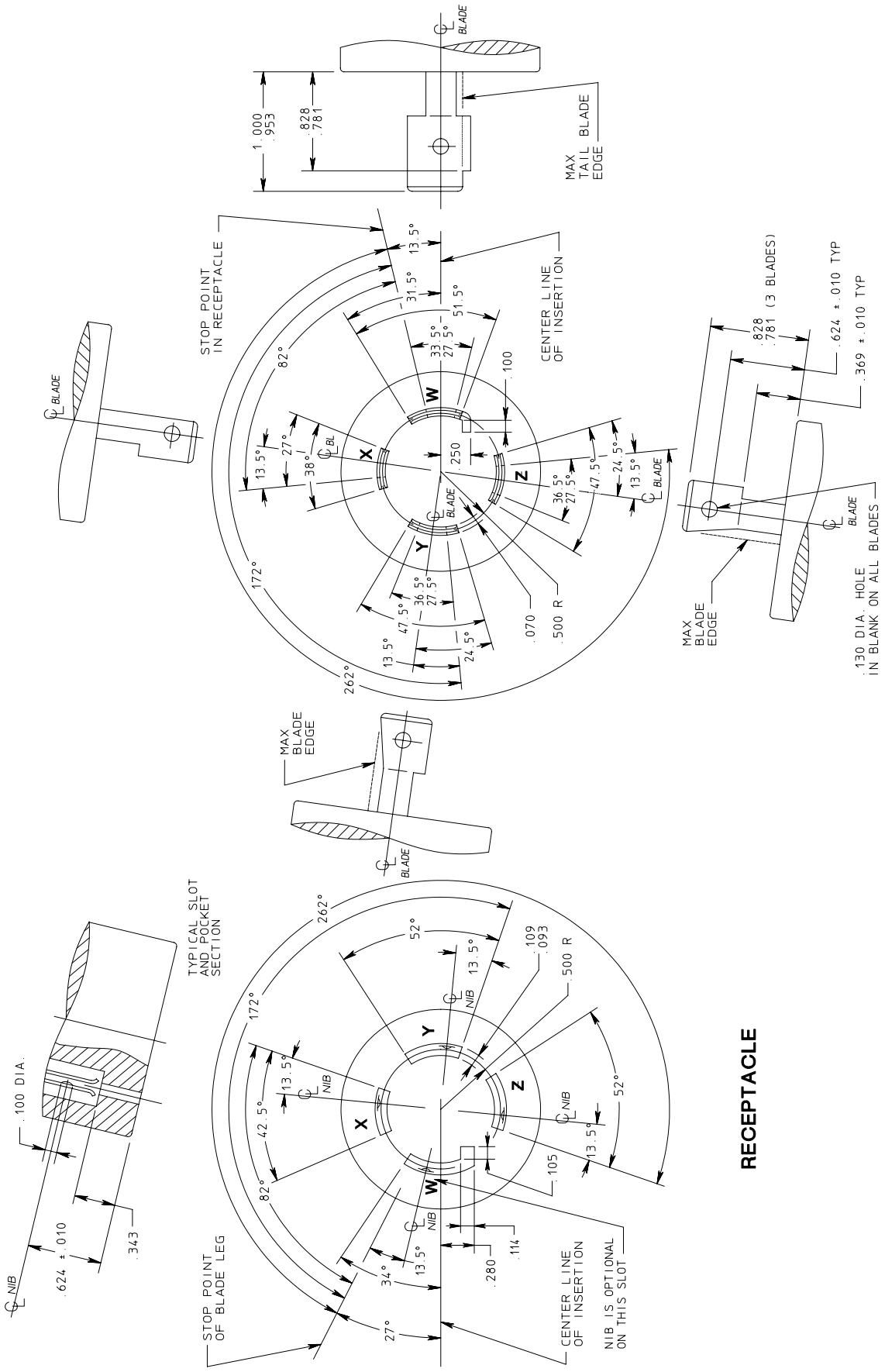

FIGURE L19–30
LOCKING TYPE PLUG AND RECEPTACLE
277/480 volts, 30 amperes, 3 phase Y, 4 pole, 4 wire

© Copyright 2002 by the National Electrical Manufacturers Association.

FIGURE L20–20
LOCKING TYPE PLUG AND RECEPTACLE
347/600 volts, 20 amperes, 3 phase Y, 4 pole, 4 wire

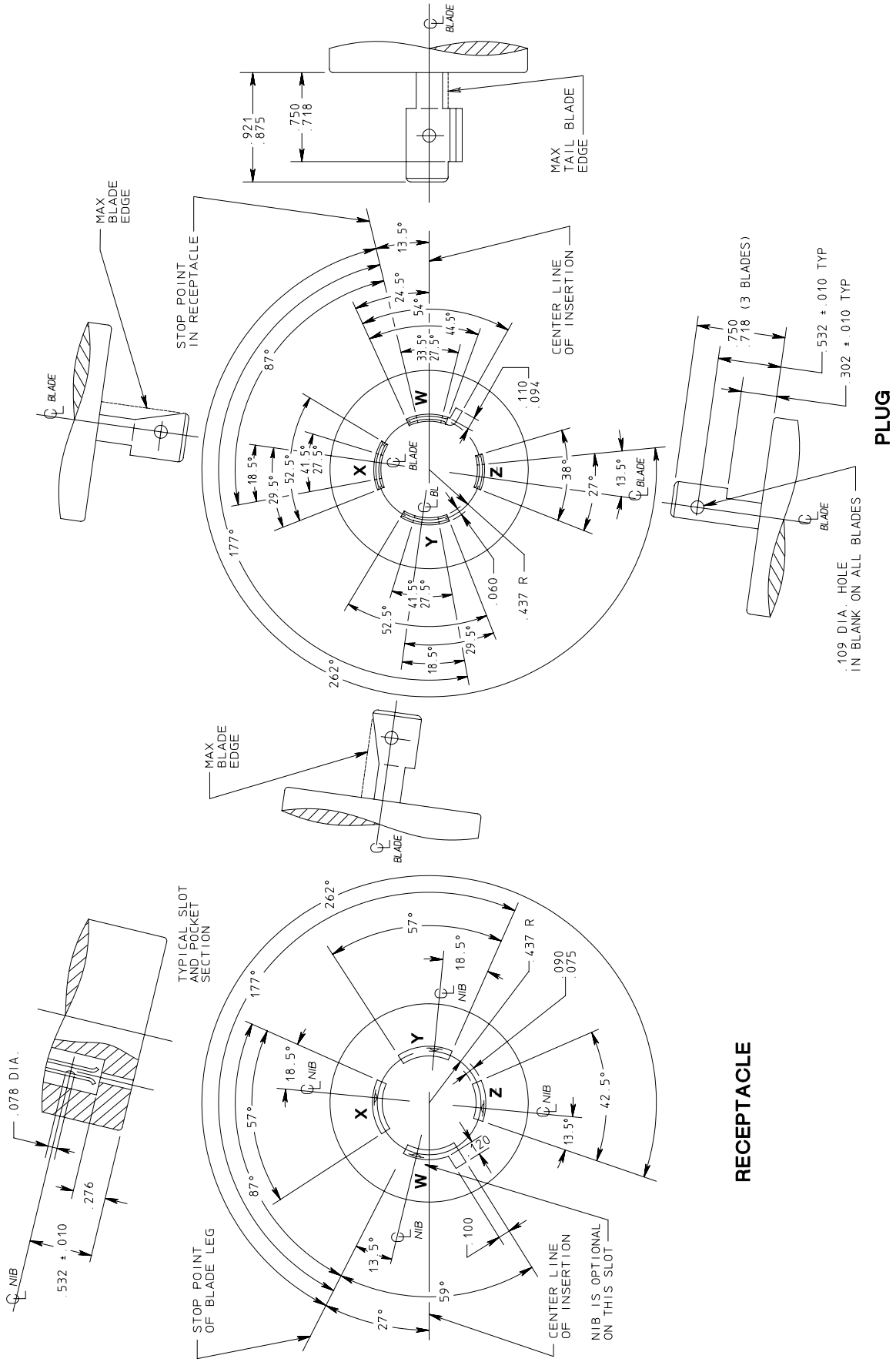

© Copyright 2002 by the National Electrical Manufacturers Association.

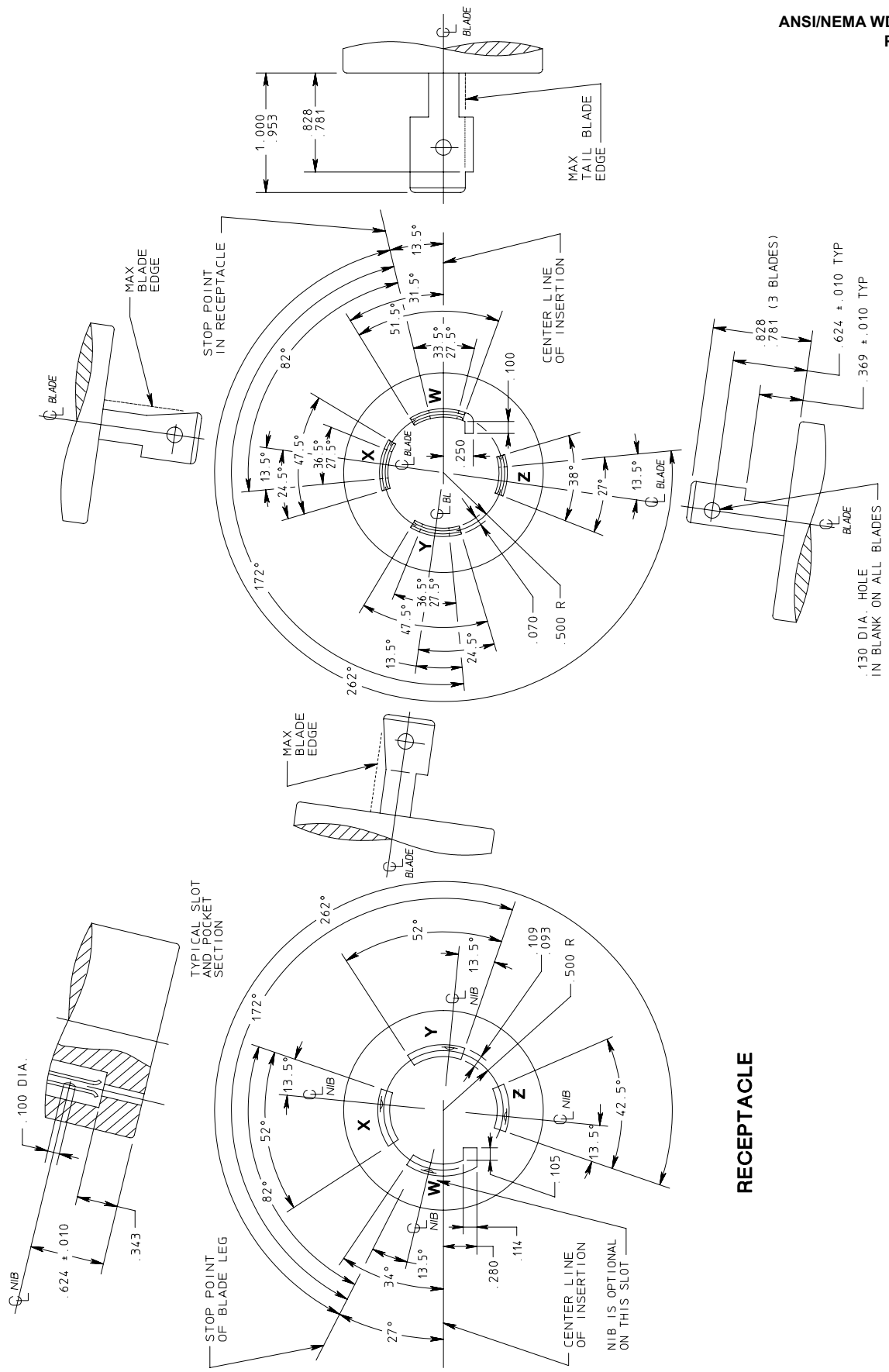

FIGURE L20–30
LOCKING TYPE PLUG AND RECEPTACLE
347/600 volts, 30 amperes, 3 phase Y, 4 pole, 4 wire

© Copyright 2002 by the National Electrical Manufacturers Association.

FIGURE L21–20
LOCKING TYPE PLUG AND RECEPTACLE
120/208 volts, 20 amperes, 3 phase Y, 4 pole, 5 wire, Grounding type

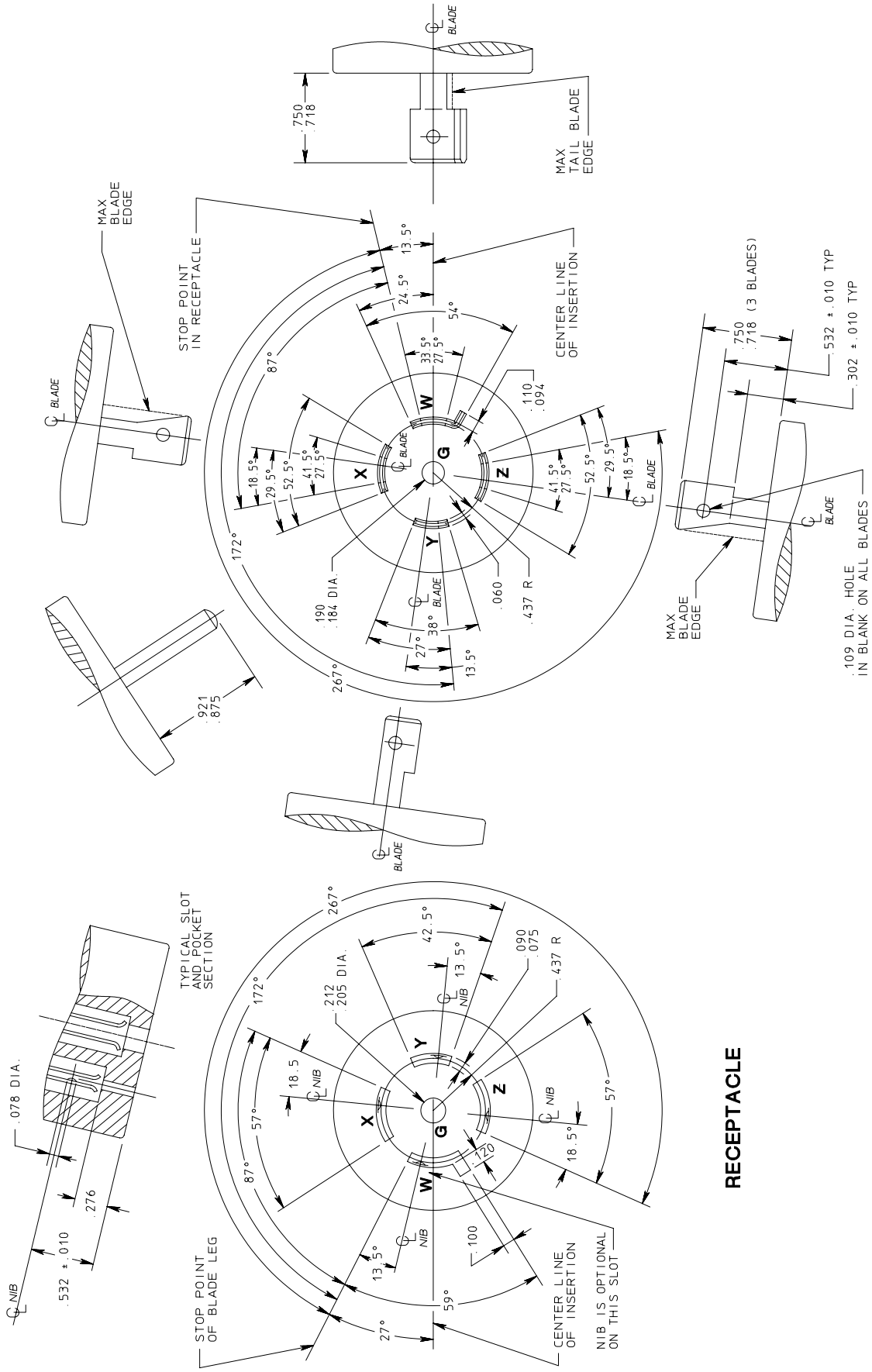

© Copyright 2002 by the National Electrical Manufacturers Association.

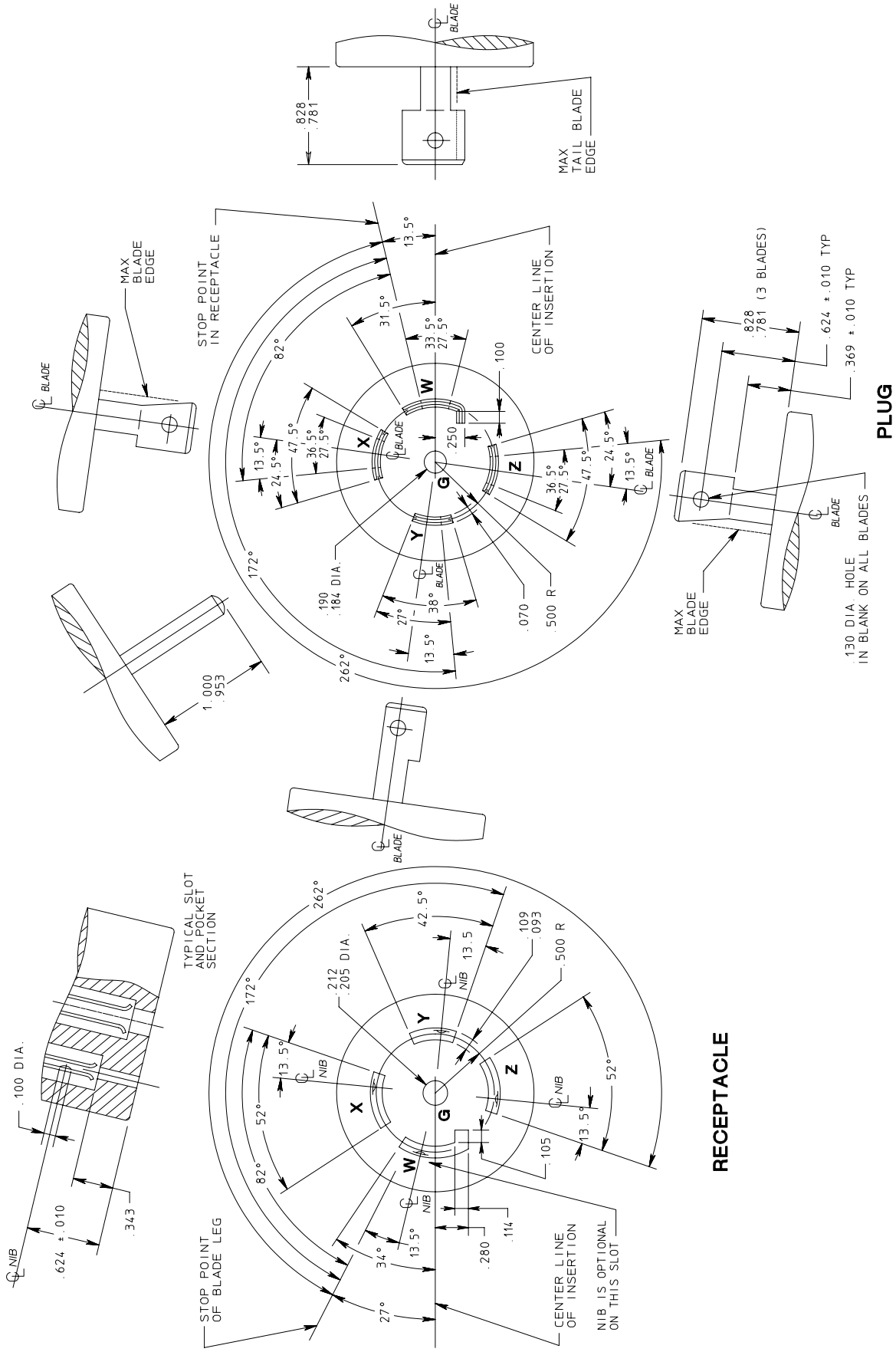

FIGURE L21–30
LOCKING TYPE PLUG AND RECEPTACLE
120/208 volts, 30 amperes, 3 phase Y, 4 pole, 5 wire, Grounding type

© Copyright 2002 by the National Electrical Manufacturers Association.

FIGURE L21–50
LOCKING TYPE PLUG AND RECEPTACLE
208 / 120 volts, 50 amperes, 3 Phase Y, 4 Pole, 5 Wire, Grounding type

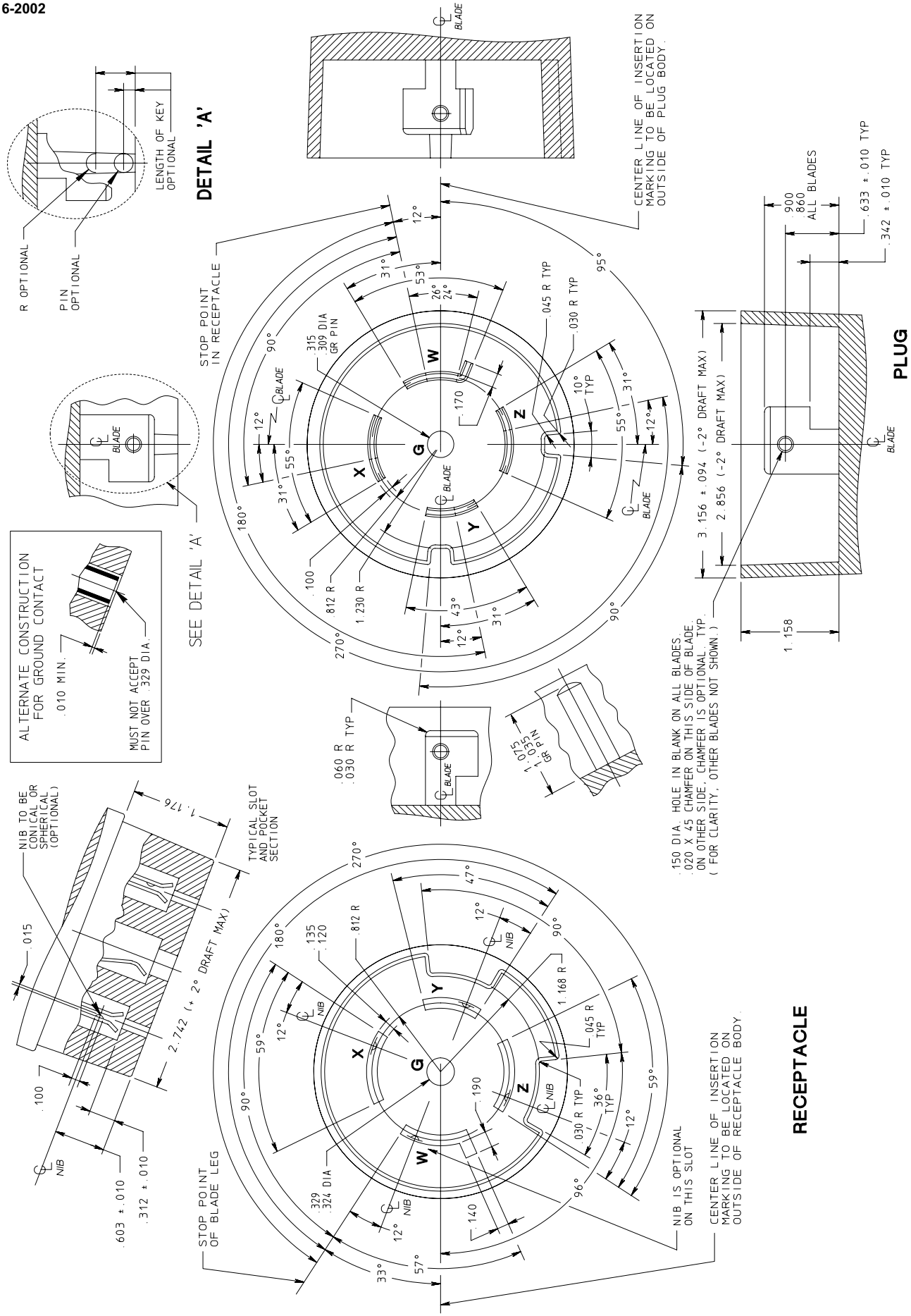

© Copyright 2002 by the National Electrical Manufacturers Association.

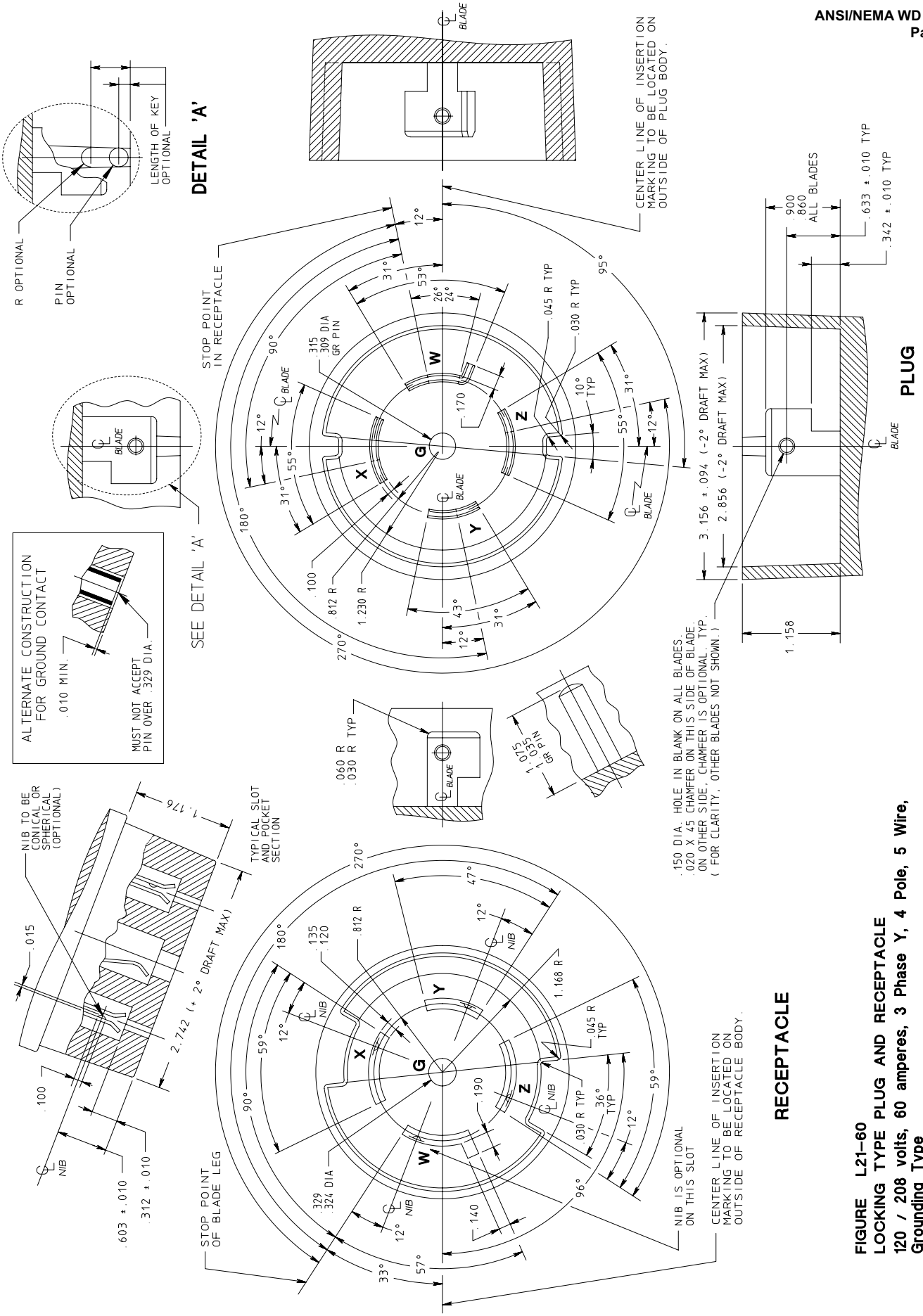

FIGURE L21–60
LOCKING TYPE PLUG AND RECEPTACLE
120 / 208 volts, 60 amperes, 3 Phase Y, 4 Pole, 5 Wire, Grounding Type

© Copyright 2002 by the National Electrical Manufacturers Association.

FIGURE L22–20
LOCKING TYPE PLUG AND RECEPTACLE
277/480 volts, 20 amperes, 3 phase Y, 4 pole, 5 wire, Grounding type

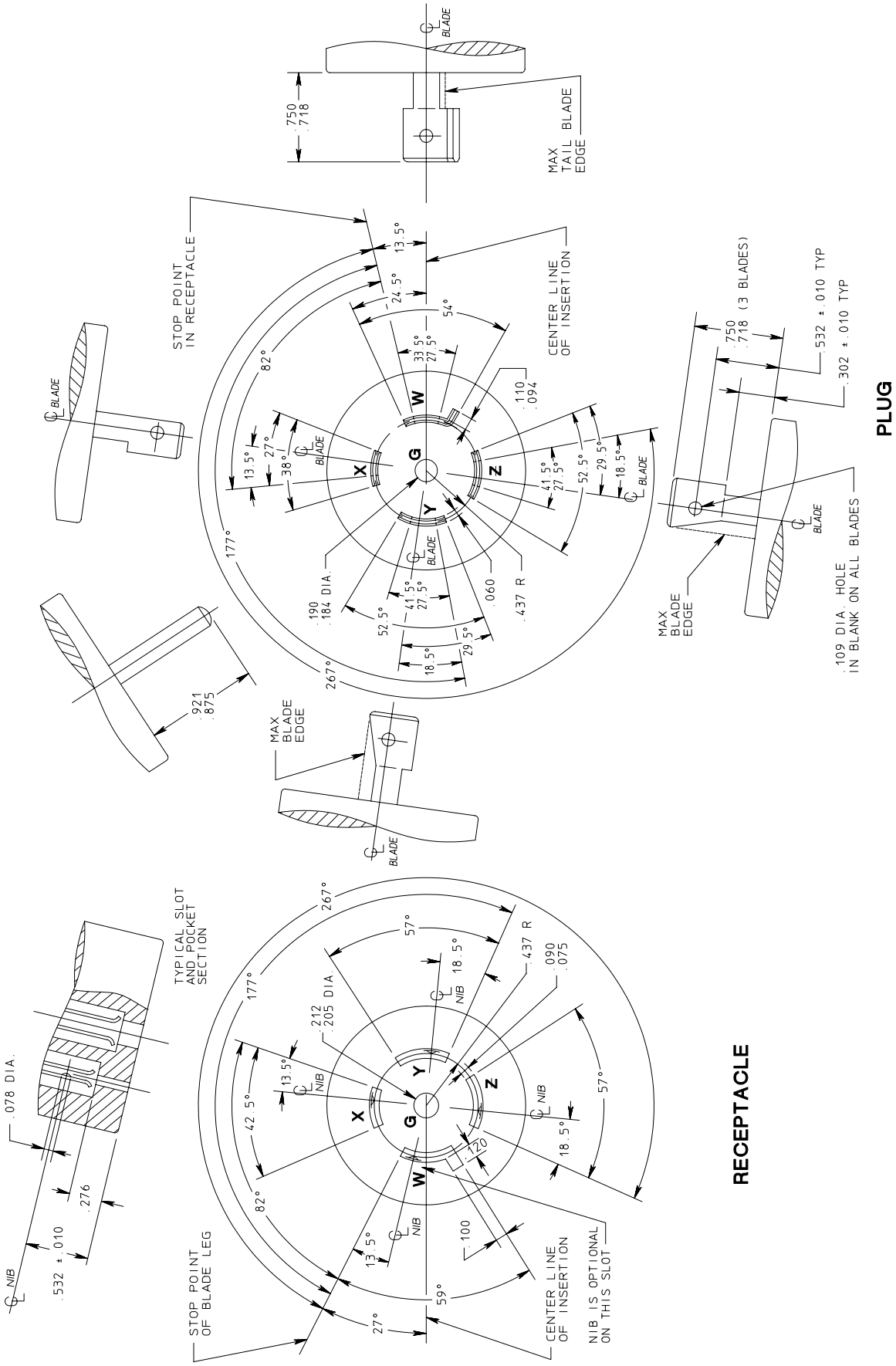

© Copyright 2002 by the National Electrical Manufacturers Association.

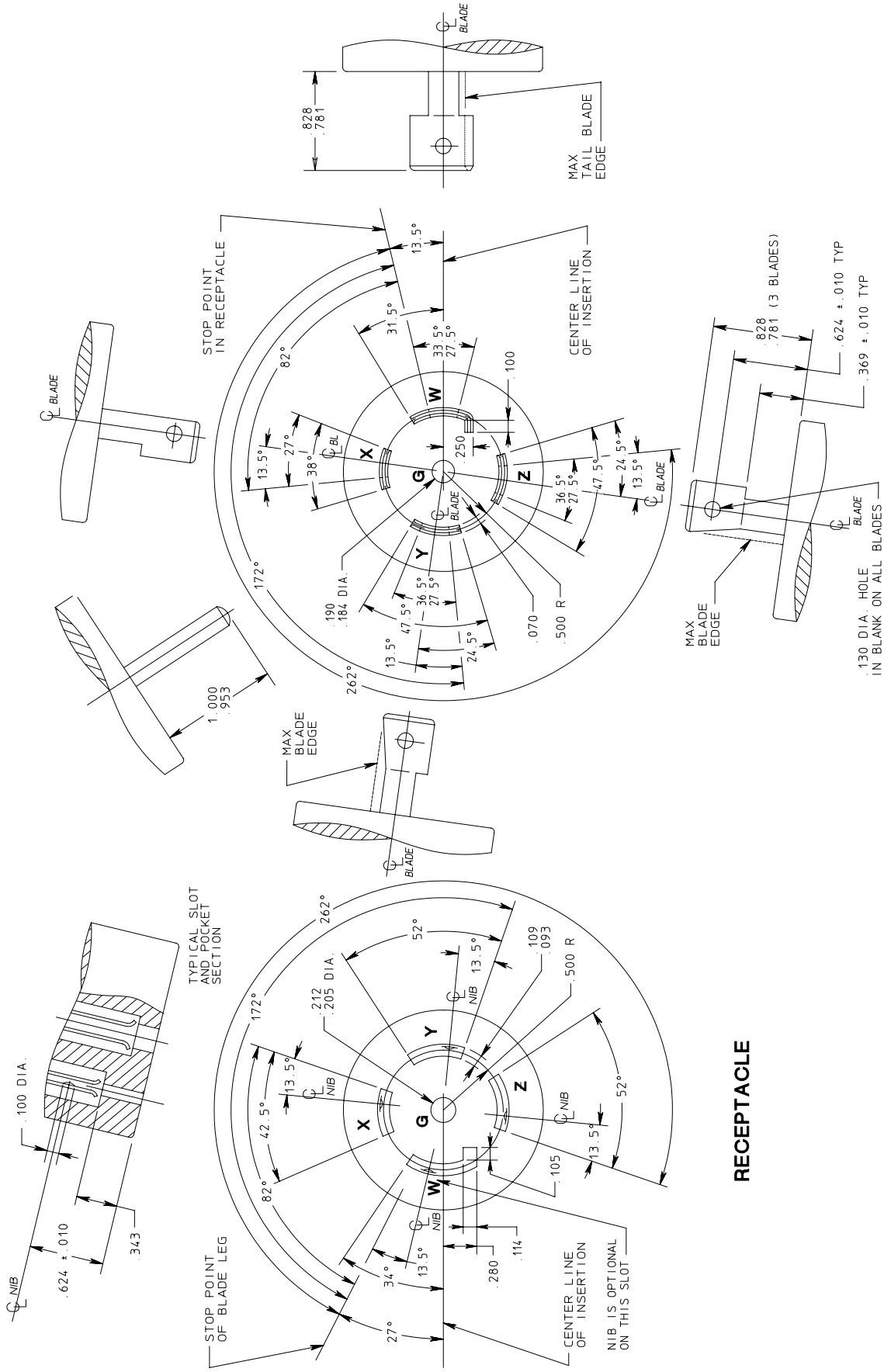

FIGURE L22–30
LOCKING TYPE PLUG AND RECEPTACLE
277/480 volts, 30 amperes, 3 phase Y, 4 pole, 5 wire, Grounding type

© Copyright 2002 by the National Electrical Manufacturers Association.

FIGURE L22–50
LOCKING TYPE PLUG AND RECEPTACLE
480 / 277 volts, 50 amperes, 3 Phase Y, 4 Pole, 5 Wire, Grounding Type

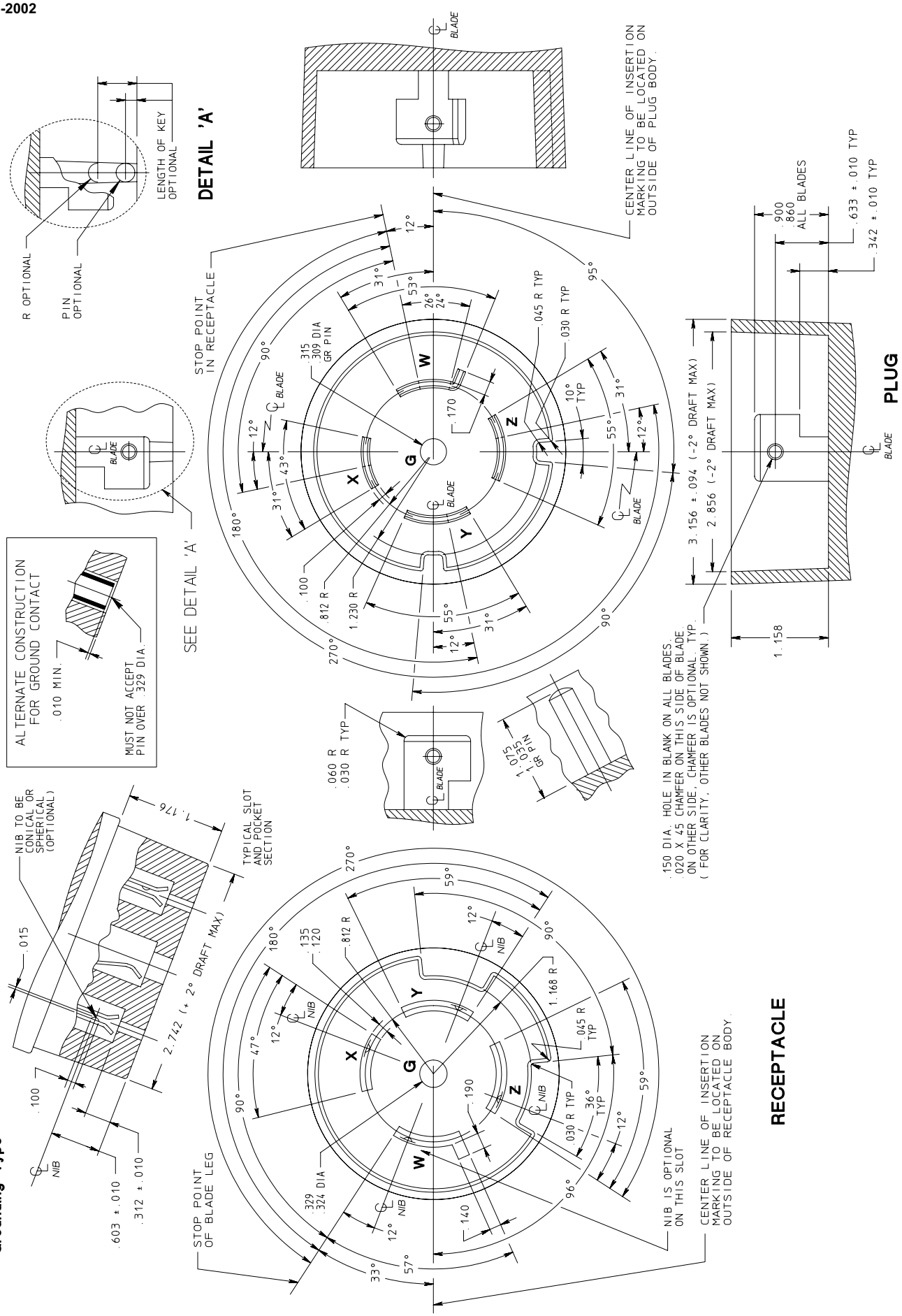

© Copyright 2002 by the National Electrical Manufacturers Association.

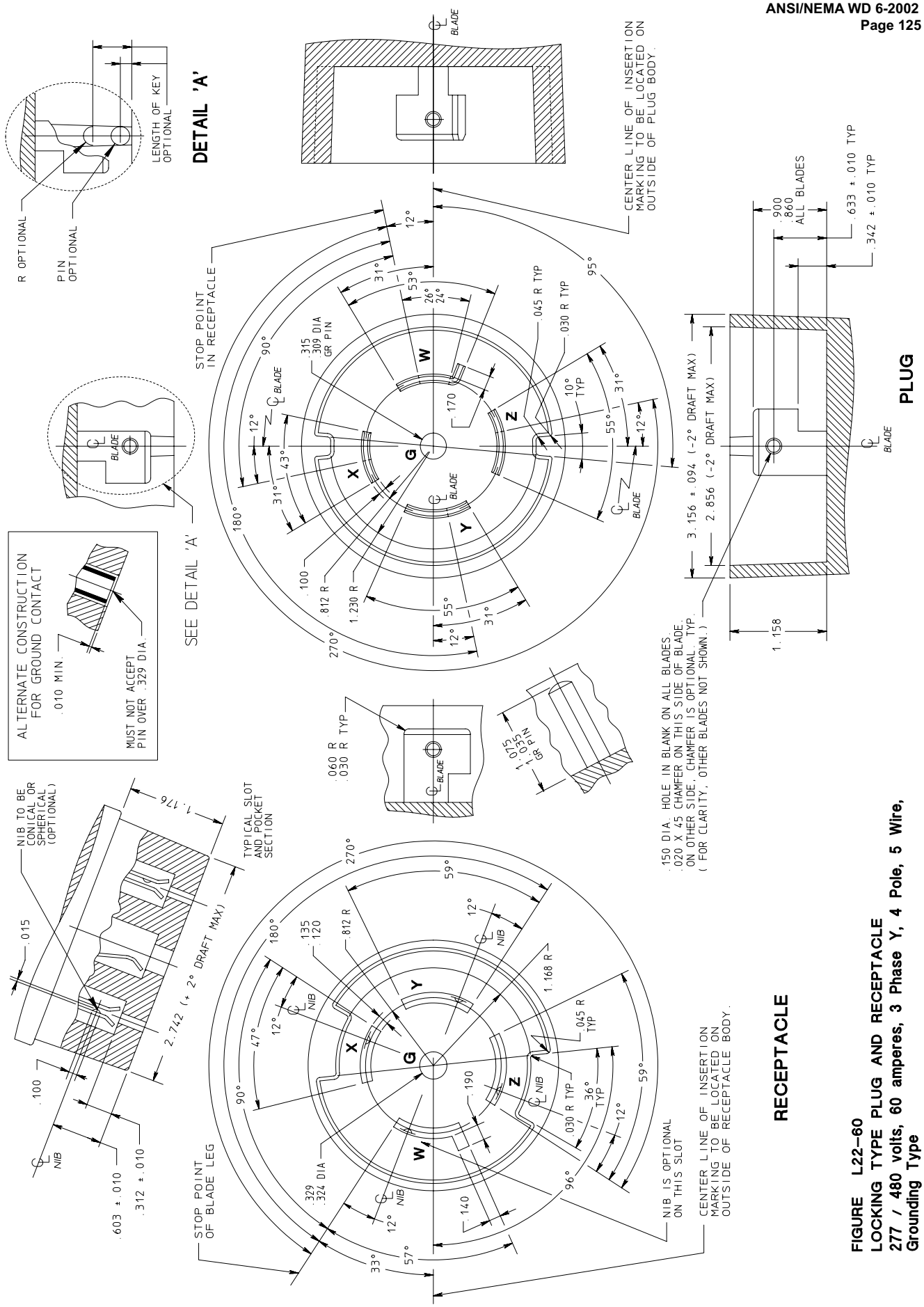

FIGURE L22–60
LOCKING TYPE PLUG AND RECEPTACLE
277 / 480 volts, 60 amperes, 3 Phase Y, 4 Pole, 5 Wire, Grounding Type

© Copyright 2002 by the National Electrical Manufacturers Association.

FIGURE L23–20
LOCKING TYPE PLUG AND RECEPTACLE
347/600 volts, 20 amperes, 3 phase Y, 4 pole, 5 wire, Grounding type

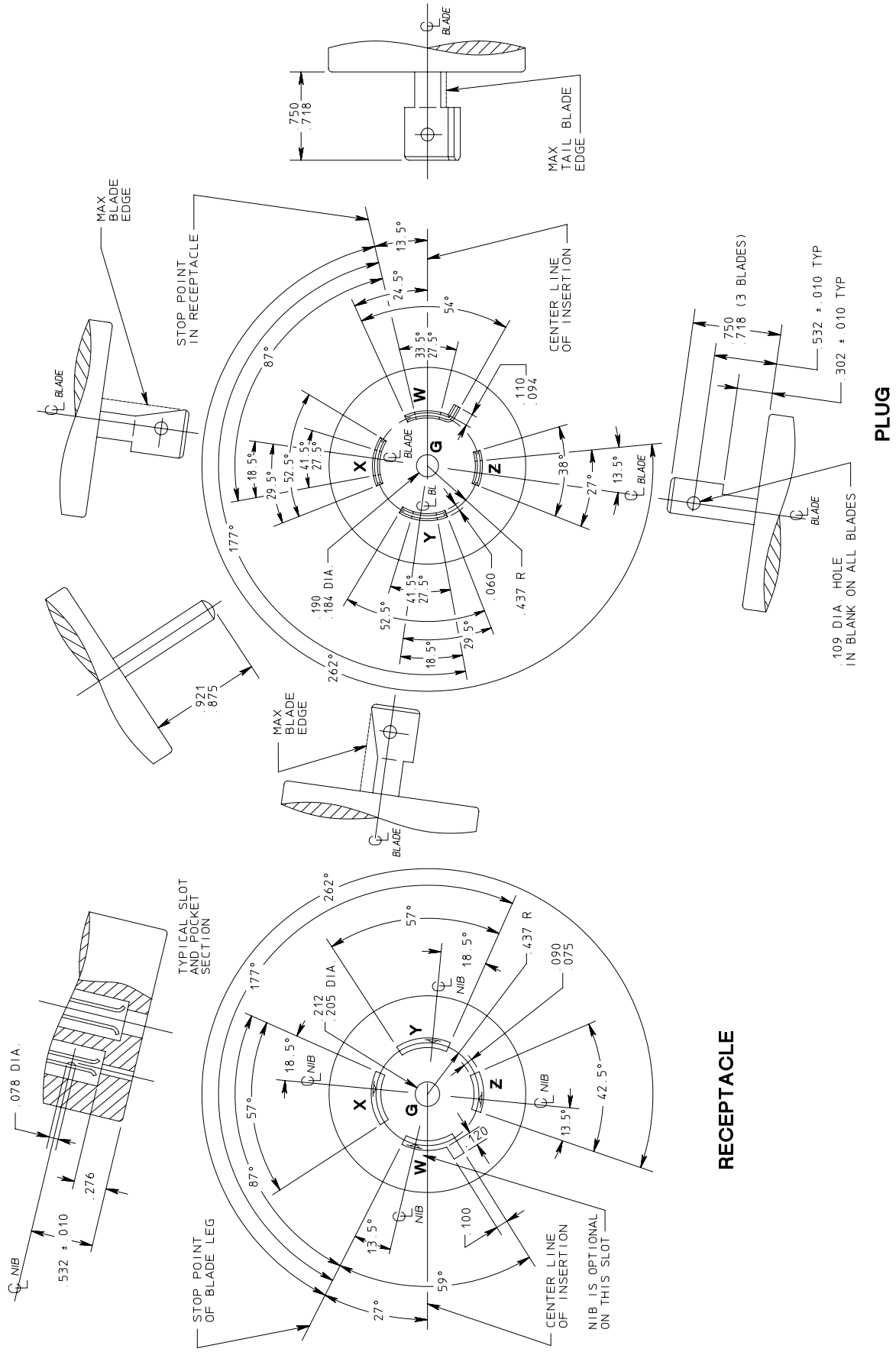

© Copyright 2002 by the National Electrical Manufacturers Association.

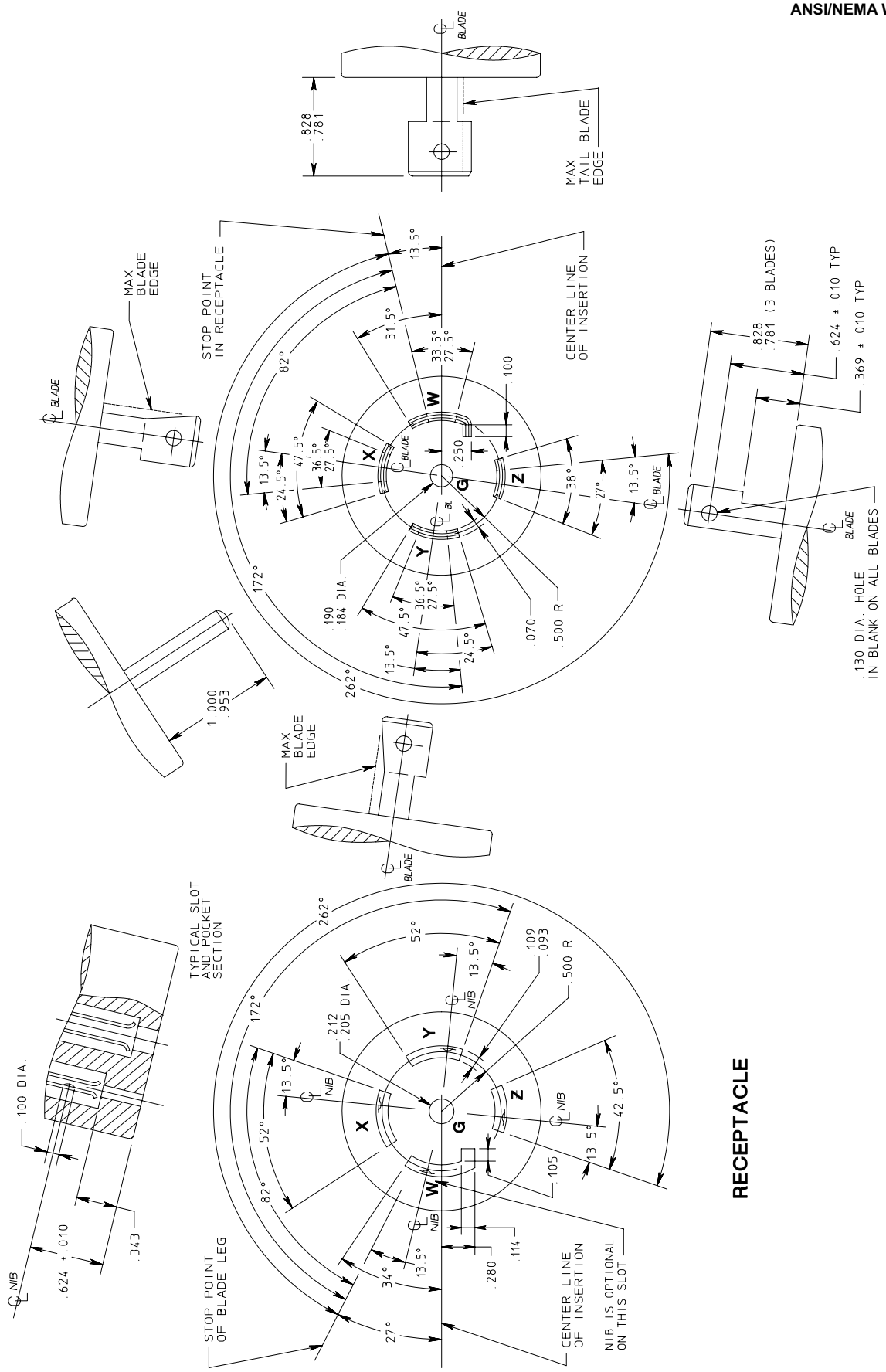

FIGURE L23–30
LOCKING TYPE PLUG AND RECEPTACLE
347/600 volts, 30 amperes, 3 phase Y, 4 pole, 5 wire, Grounding type

© Copyright 2002 by the National Electrical Manufacturers Association.

FIGURE L23–50
LOCKING TYPE PLUG AND RECEPTACLE
600 / 347 volts, 50 amperes, 3 Phase Y, 4 Pole, 5 Wire, Grounding type

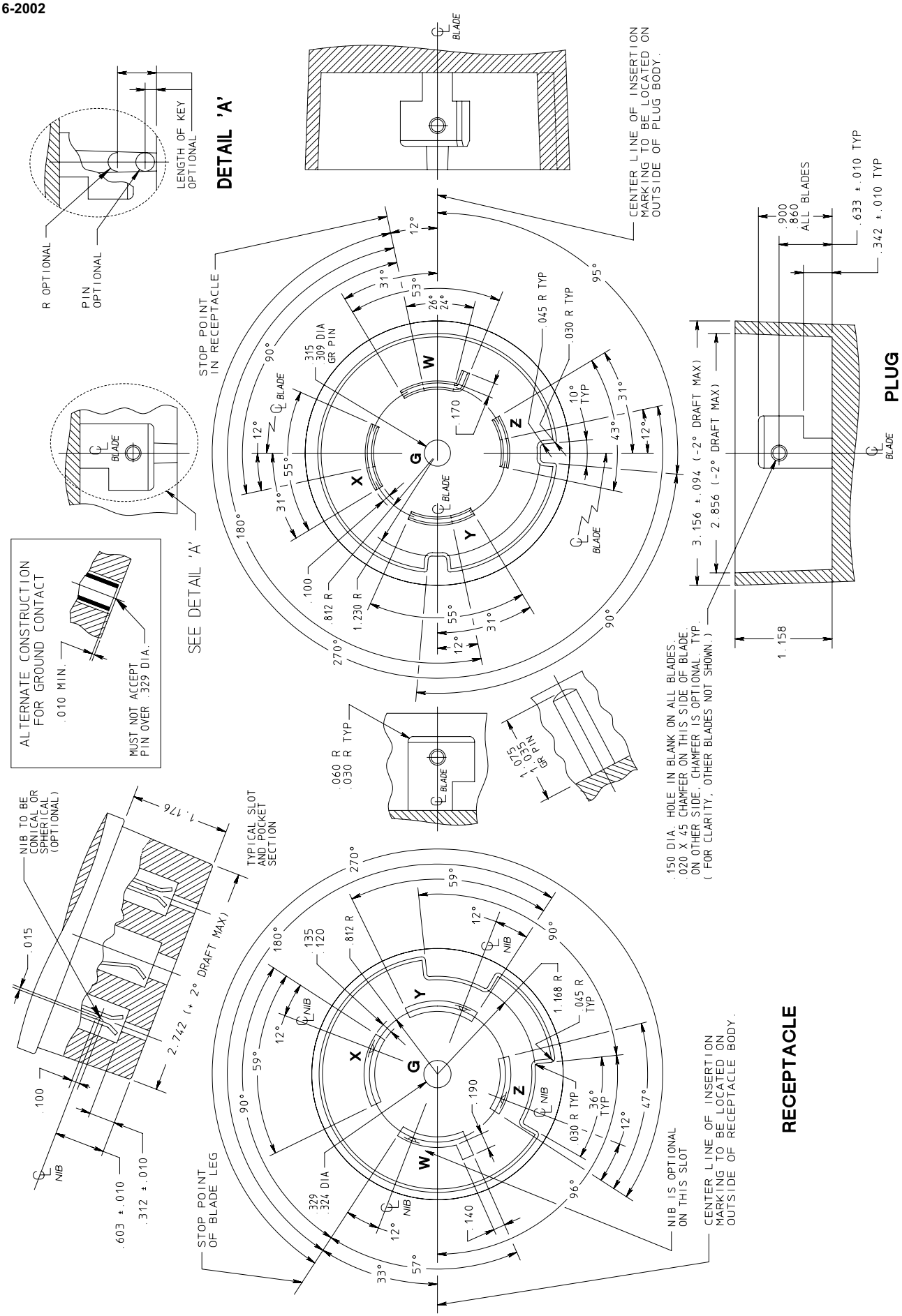

© Copyright 2002 by the National Electrical Manufacturers Association.

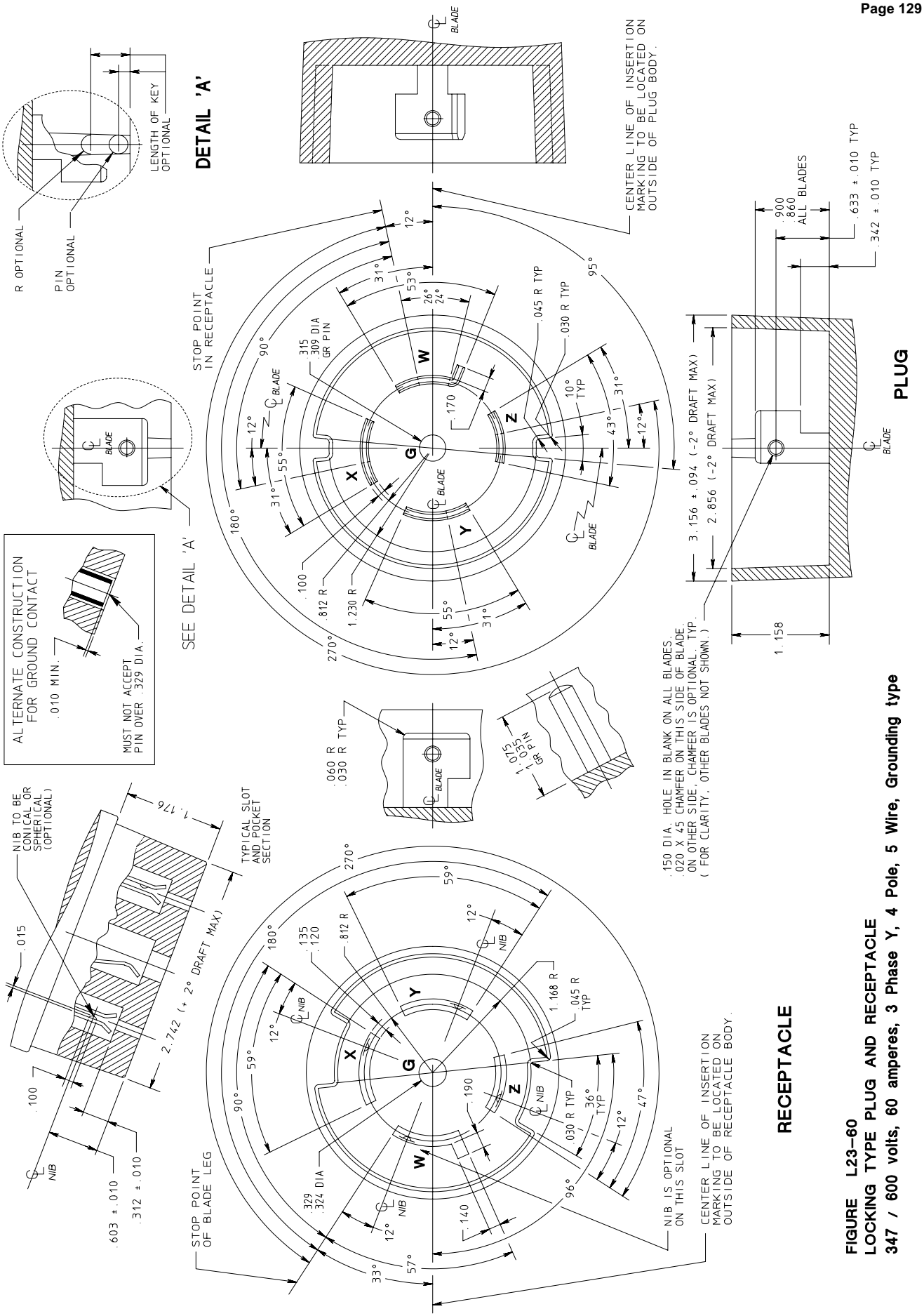

FIGURE L23–60
LOCKING TYPE PLUG AND RECEPTACLE
347 / 600 volts, 60 amperes, 3 Phase Y, 4 Pole, 5 Wire, Grounding type

© Copyright 2002 by the National Electrical Manufacturers Association.

FIGURE L24–20
LOCKING TYPE PLUG AND RECEPTACLE
347 volts, 20 amperes, 2 pole, 3 wire, Grounding type

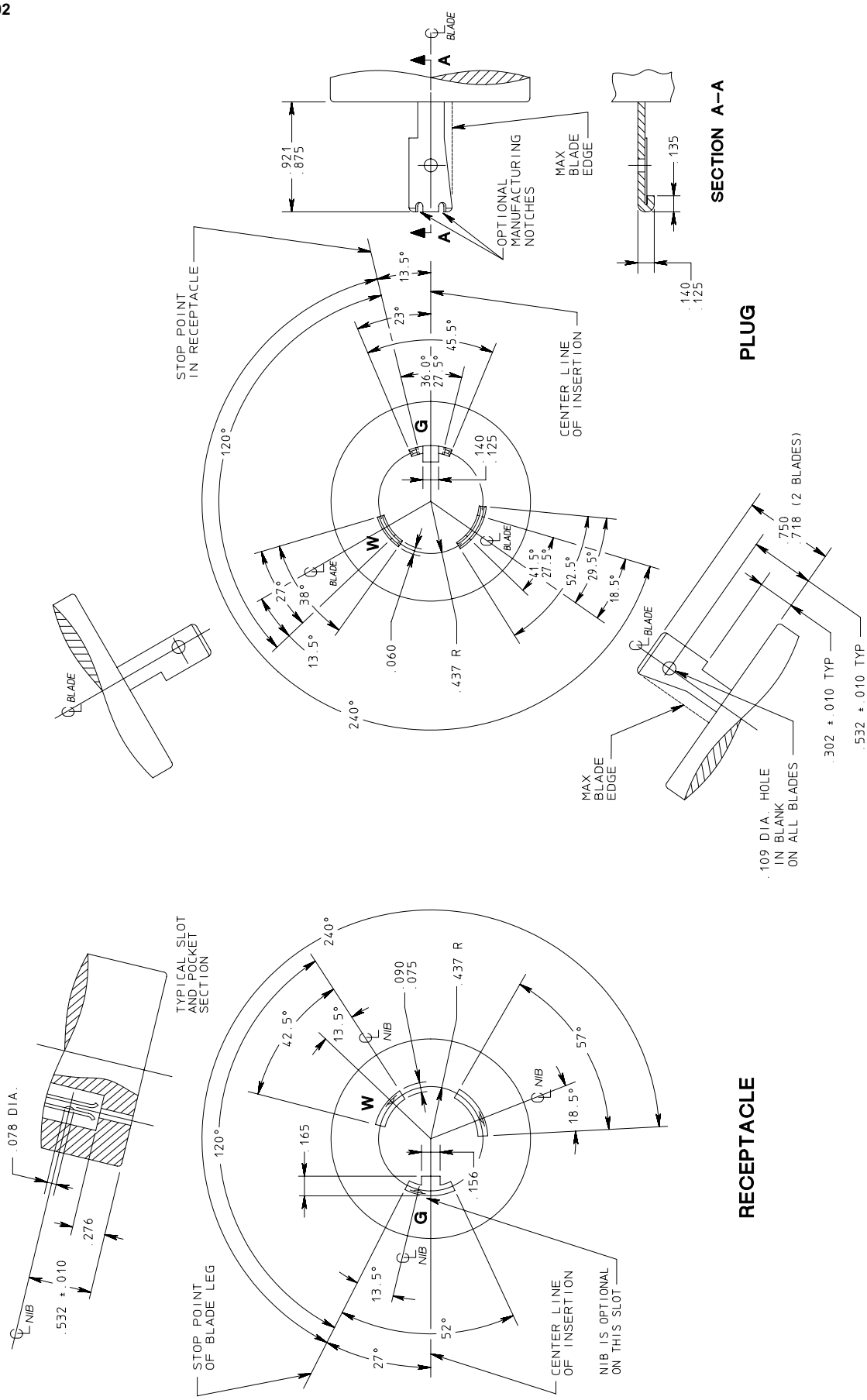

© Copyright 2002 by the National Electrical Manufacturers Association.

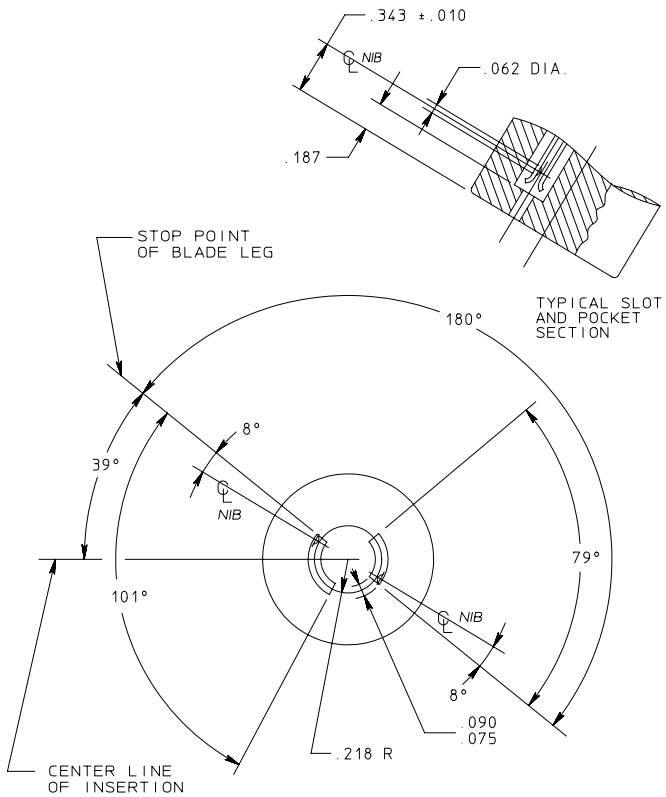

RECEPTACLE

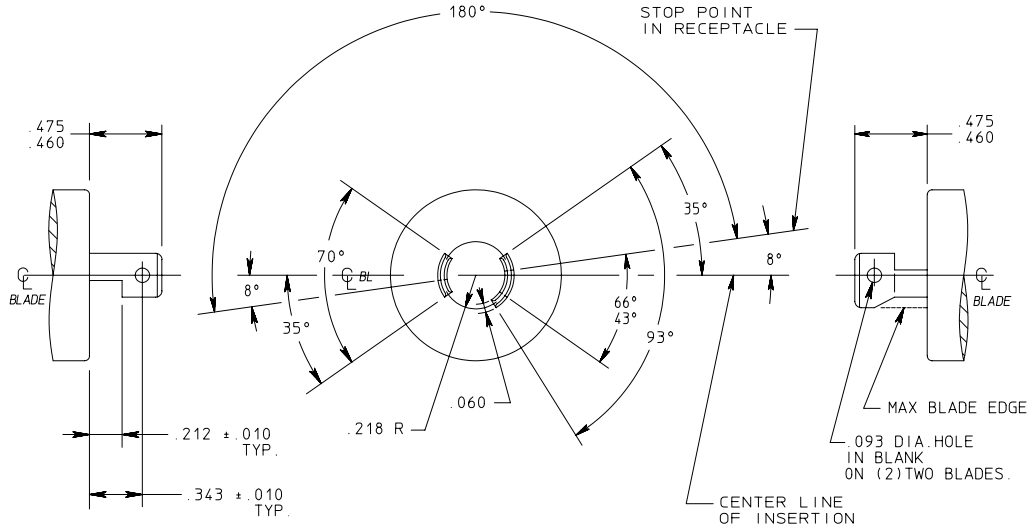

POLARIZED PLUG

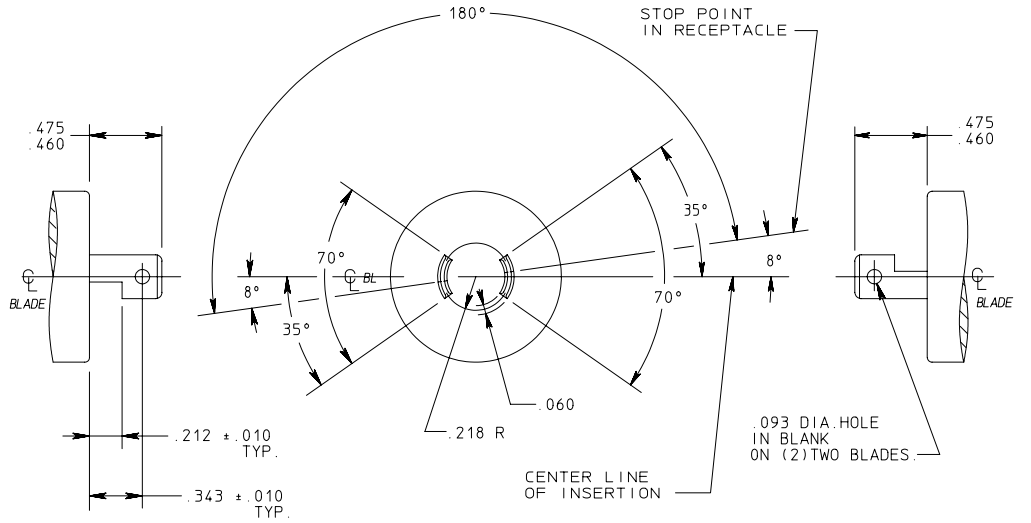

NON–POLARIZED PLUG

FIGURE ML–1
MIDGET LOCKING TYPE PLUG AND RECEPTACLE
125 volts, 15 amperes, 2 pole, 2 wire

© Copyright 2002 by the National Electrical Manufacturers Association.

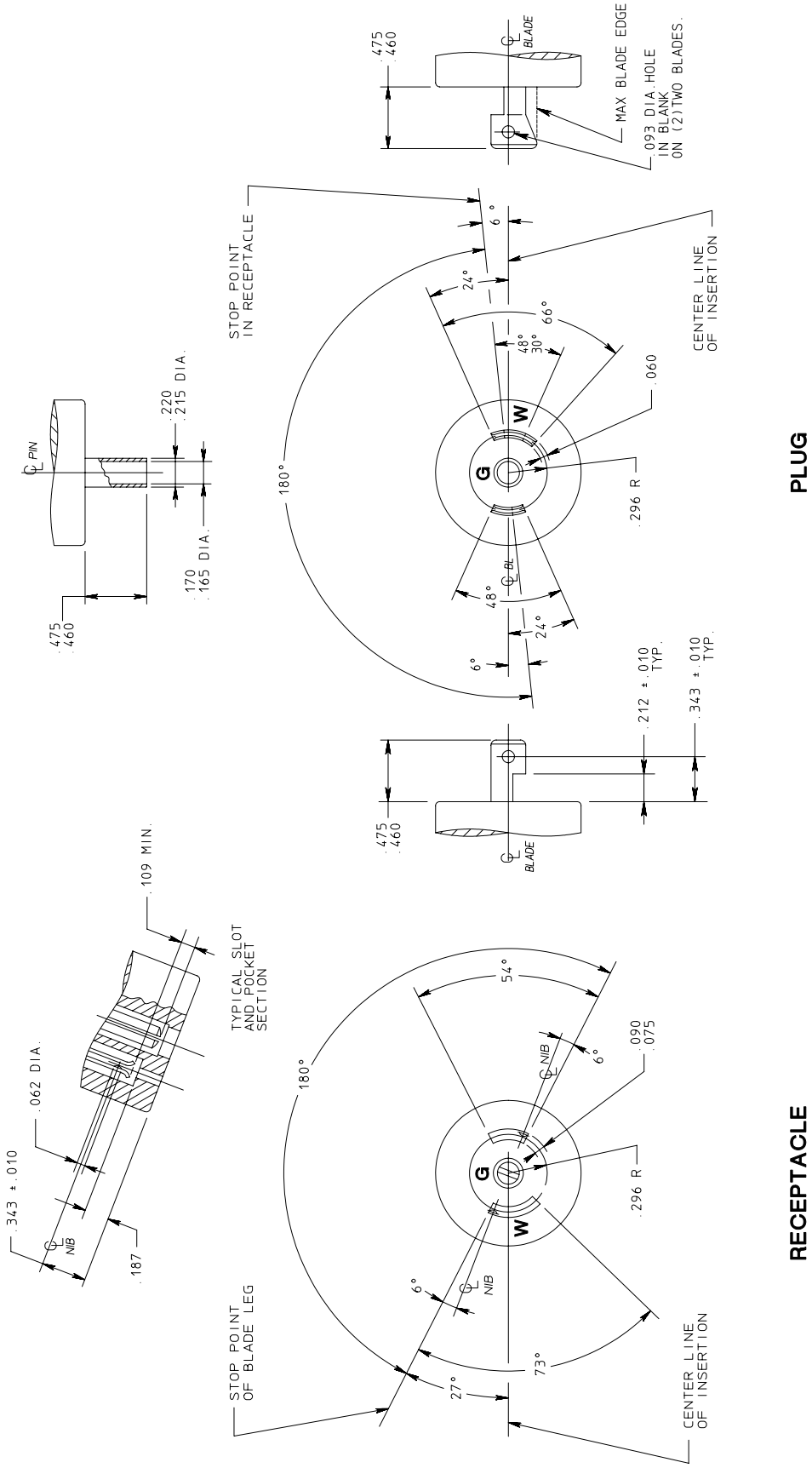

PLUG

RECEPTACLE

FIGURE ML–2
MIDGET LOCKING TYPE PLUG AND RECEPTACLE
125 volts, 15 amperes, 2 pole, 3 wire, Grounding type

© Copyright 2002 by the National Electrical Manufacturers Association.

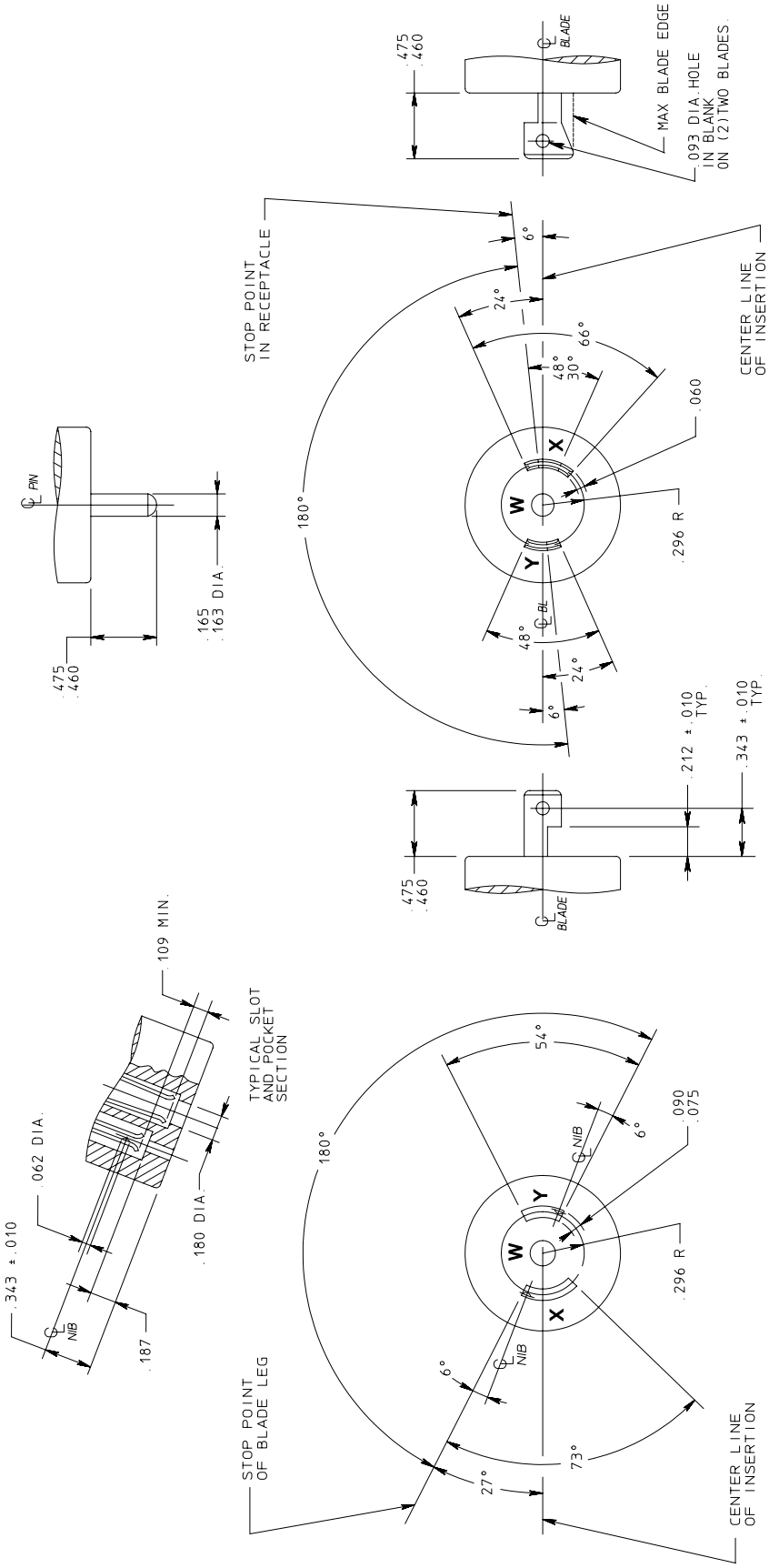

FIGURE ML–3
MIDGET LOCKING TYPE PLUG AND RECEPTACLE
125/250 volts, 15 amperes, 3 pole, 3 wire

© Copyright 2002 by the National Electrical Manufacturers Association.

FIGURE FSL 1
LOCKING TYPE PLUG AND RECEPTACLE
28 volts DC, 30 amperes, 2 pole, 3 wire, Grounding type

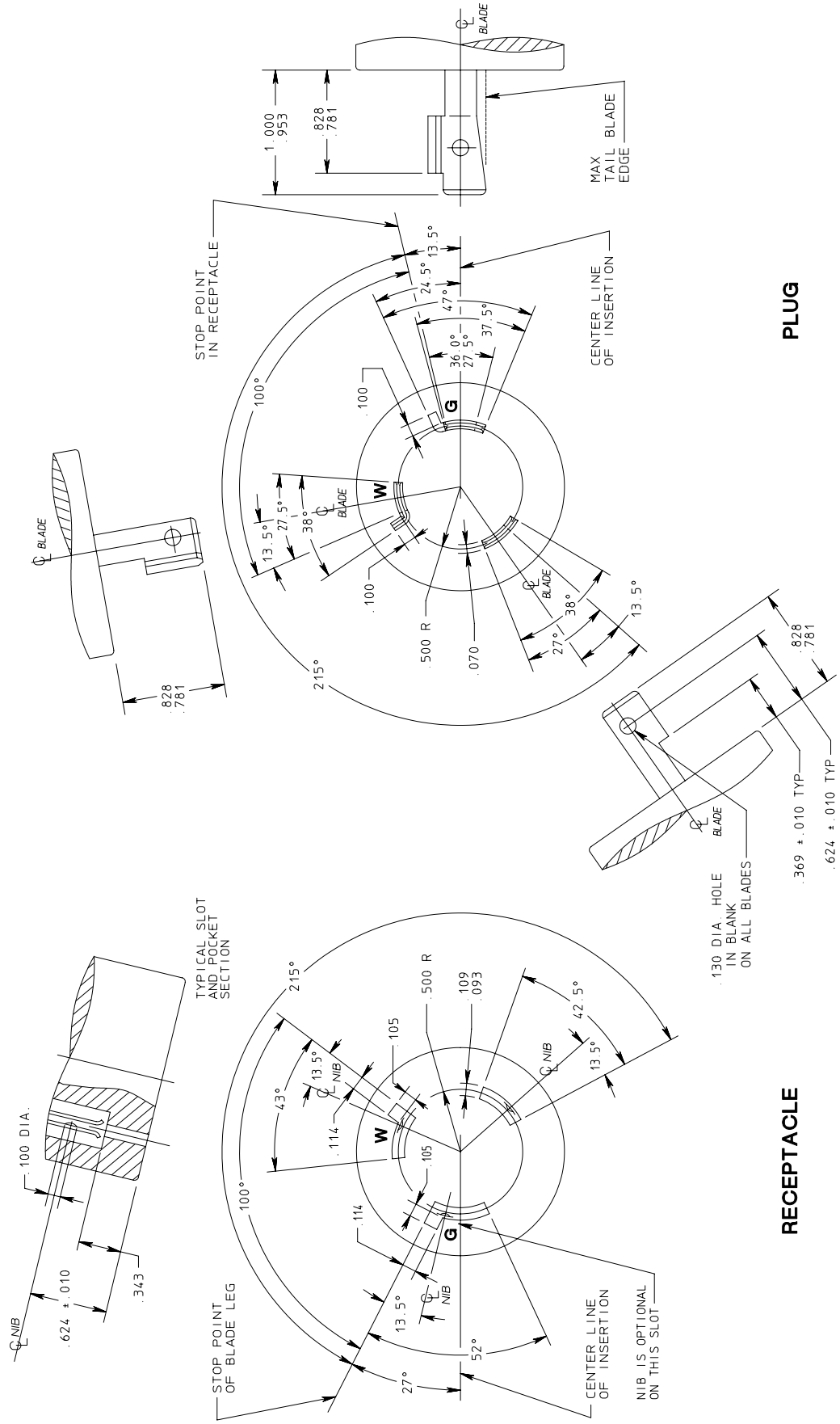

© Copyright 2002 by the National Electrical Manufacturers Association.

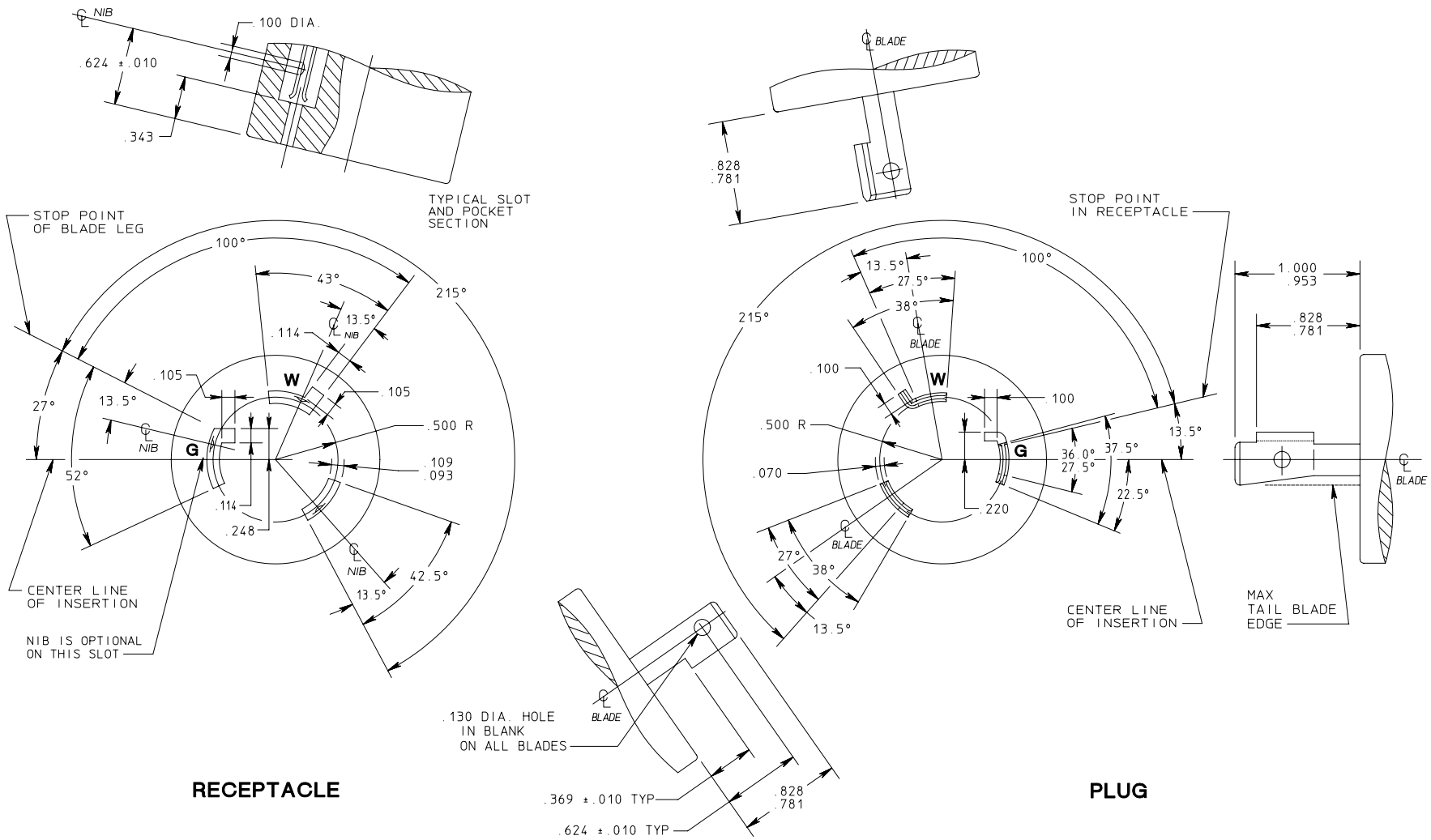

FIGURE FSL 2
LOCKING TYPE PLUG AND RECEPTACLE
120 volts, 30 amperes, 400 Hz, 2 pole, 3 wire, Grounding type

© Copyright 2002 by the National Electrical Manufacturers Association.

FIGURE FSL 3
LOCKING TYPE PLUG AND RECEPTACLE
120 volts, 30 amperes, 400 HZ, 3 pole, 3 phase, 4 wire, Grounding type

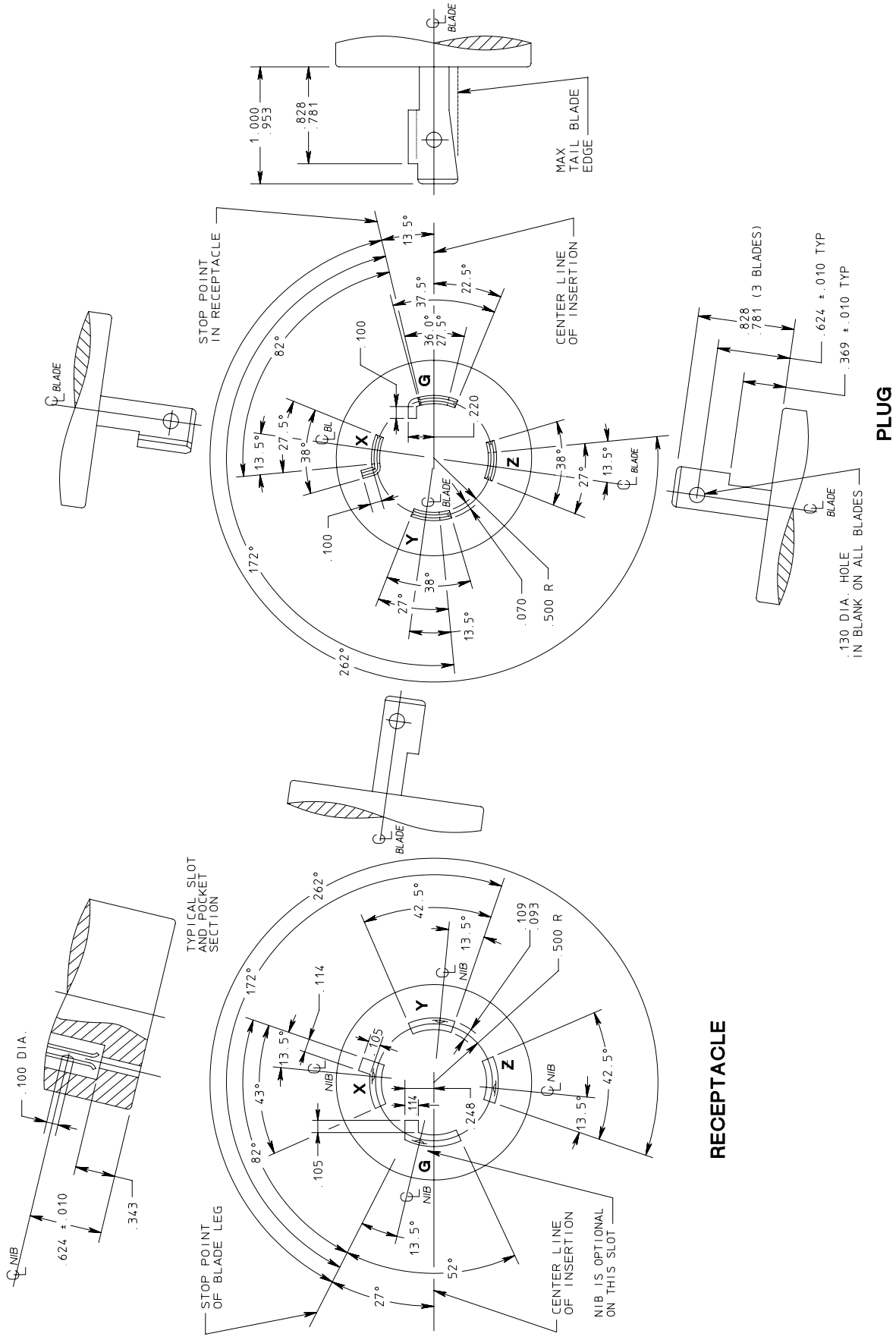

© Copyright 2002 by the National Electrical Manufacturers Association.

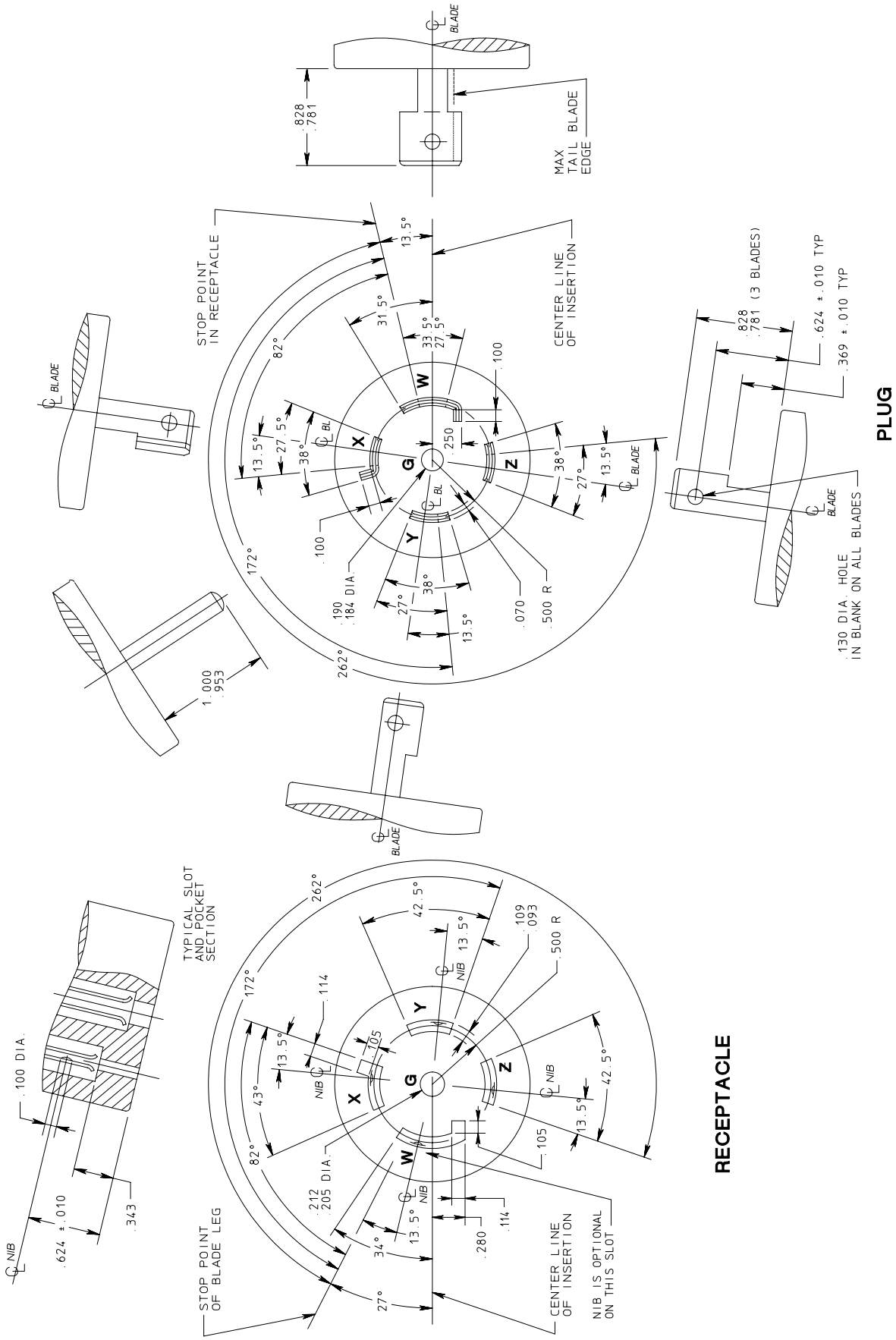

FIGURE FSL 4
LOCKING TYPE PLUG AND RECEPTACLE
120/208 volts, 30 amperes, 3 phase Y, 400 HZ, 4 pole, 5 wire, Grounding type

© Copyright 2002 by the National Electrical Manufacturers Association.

NOTES:

1- ON RECEPTACLE, THE SECONDARY GROUNDING CONTACT (TO SS-1P SHROUD) SHALL BE BONDED TO GROUNDING TERMINAL. THE SECONDARY GROUNDING CONTACT MAY BE A PORTION OF A METALLIC CIRCUMFERENTIAL SHELL. THE SECONDARY GROUNDING CONTACT IS AN OPTIONAL REDUNDANT GROUNDING PATH TO THE GROUNDING BLADE.

2- ON PLUG, SPRING CONTACT SHALL BONDED TO METALLIC SHROUD AND CONNECTED TO GROUNDING TERMINAL.

3- ON PLUG, KEYWAYS MAY BE FORMED AS SHOWN, OR MAY BE FULLY OPENED.

4- ON RECEPTACLE, THE END OF THE CIRCUMFERENTIAL PORTION OF THE KEYWAY IS 35° MIN FROM KEYWAY CENTERLINE

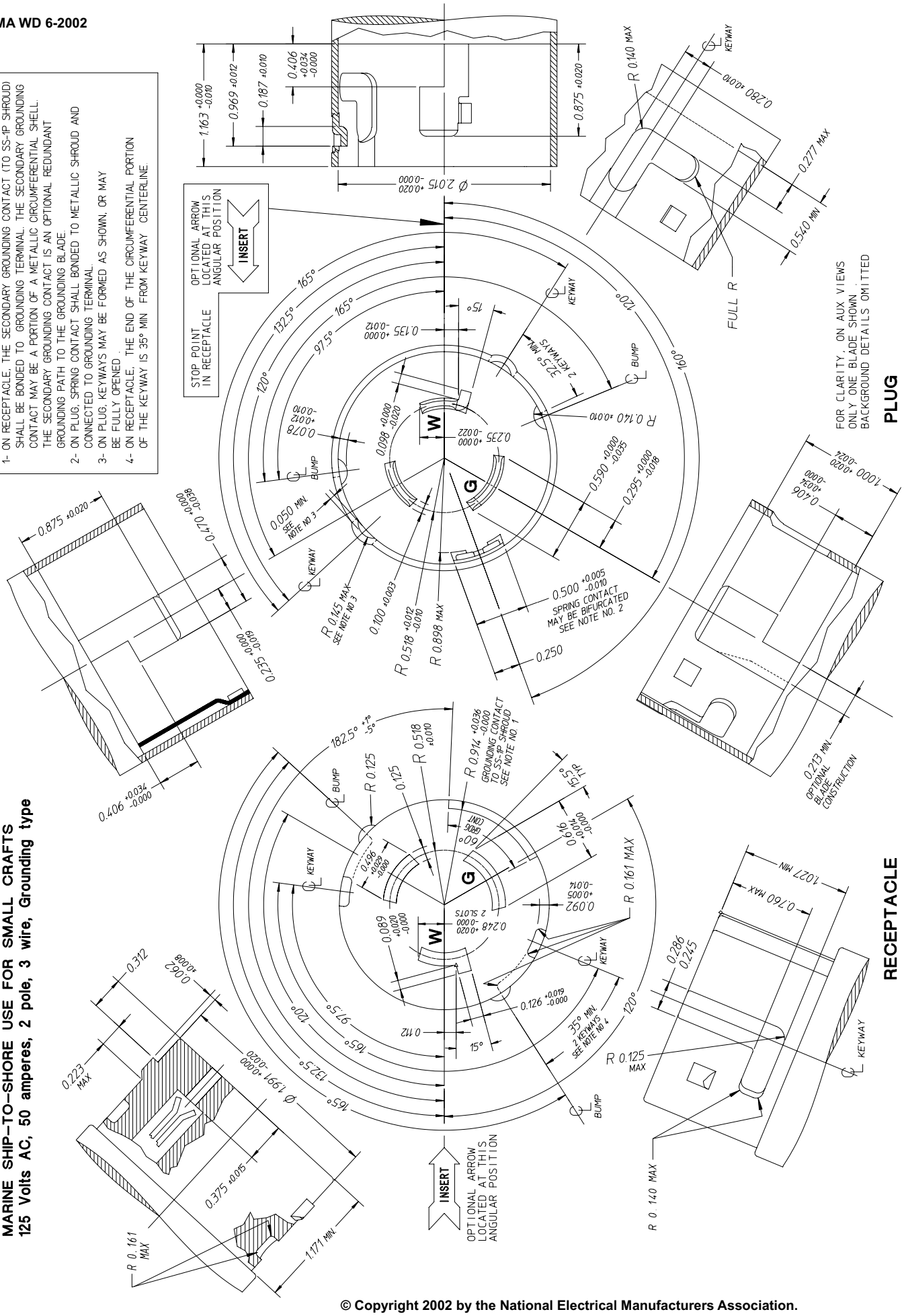

FIGURE SS1 – 50
LOCKING TYPE PLUG AND RECEPTACLE
MARINE SHIP–TO–SHORE USE FOR SMALL CRAFTS
125 Volts AC, 50 amperes, 2 pole, 3 wire, Grounding type

© Copyright 2002 by the National Electrical Manufacturers Association.

NOTES:

1- ON RECEPTACLE, GROUNDING CONTACT (TO SS-2P SHROUD) SHALL BE BONDED TO GROUNDING TERMINAL. GROUNDING CONTACT MAY BE A PORTION OF A METALLIC CIRCUMFERENTIAL SHELL.
2- ON PLUG, SPRING CONTACT SHALL BONDED TO METALLIC SHROUD AND CONNECTED TO GROUNDING TERMINAL.
3- ON PLUG, KEYWAYS MAY BE FORMED AS SHOWN, OR MAY BE FULLY OPENED .
4- ON RECEPTACLE, THE END OF THE CIRCUMFERENTIAL PORTION OF THE KEYWAY IS 35° MIN FROM KEYWAY CENTERLINE.

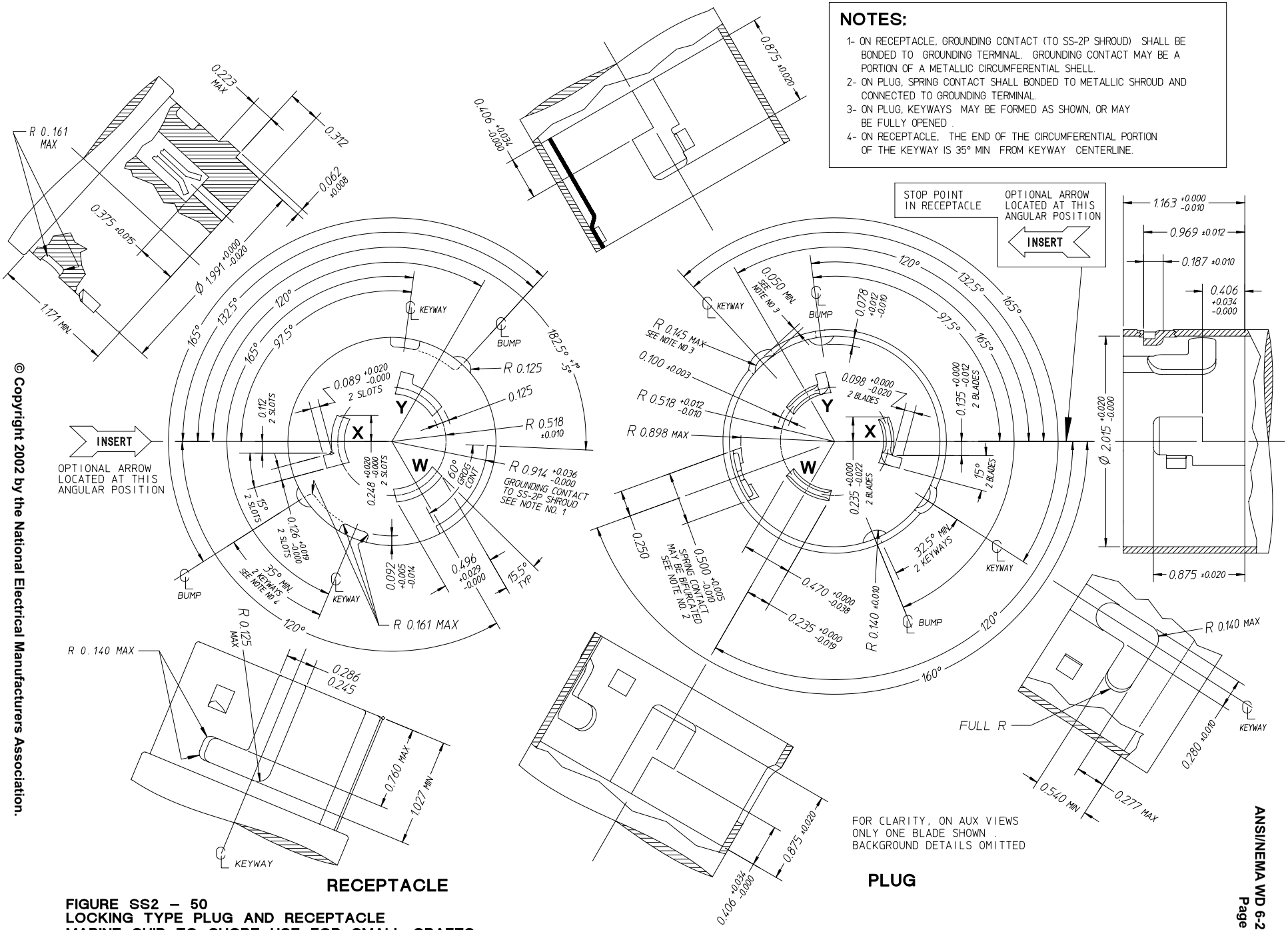

FIGURE SS2 – 50
LOCKING TYPE PLUG AND RECEPTACLE
MARINE SHIP–TO–SHORE USE FOR SMALL CRAFTS
125/250 Volts, 50 amperes, 3 pole, 4 wire, Grounding type

© Copyright 2002 by the National Electrical Manufacturers Association.

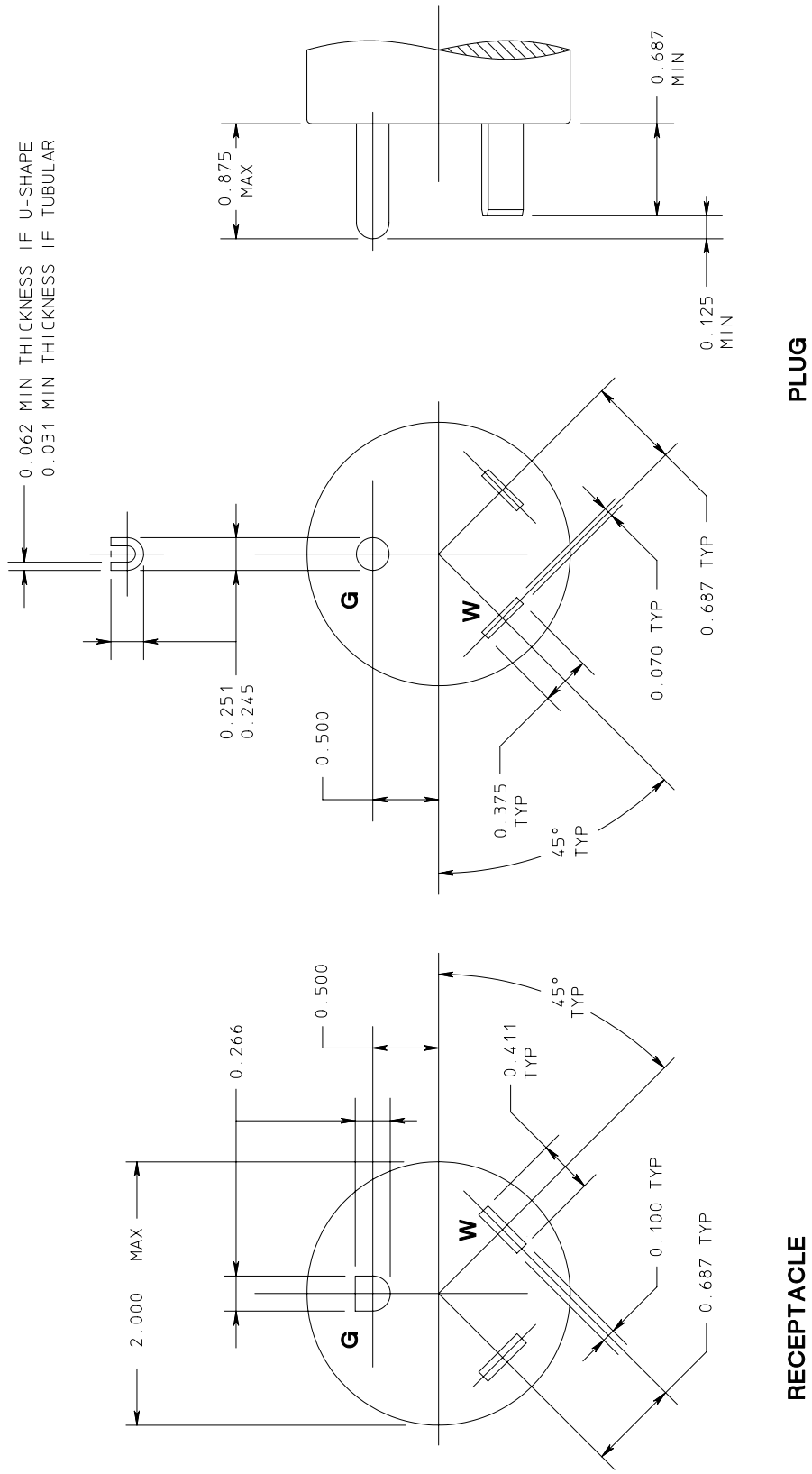

FIGURE TT
TRAVEL TRAILER USE ONLY
120 volts AC, 30 amperes, 2 pole, 3 wire, Grounding type

© Copyright 2002 by the National Electrical Manufacturers Association.

NEMA CONFIGURATIONS FOR SPECIFIC PURPOSE PLUGS AND RECEPTACLES

	DESCRIPTION	NEMA NUMBER	15 AMPERE		30 AMPERE		50 AMPERE	
			RECEPTACLE	PLUG	RECEPTACLE	PLUG	RECEPTACLE	PLUG
MIDGET LOCKING	125V, 2 POLE, 2 WIRE	ML1	ML1-15R	ML1-15P				
MIDGET LOCKING	125V, 2 POLE, 3 WIRE GROUNDING	ML2	ML2-15R	ML2-15P				
MIDGET LOCKING	125/250V, 3 POLE, 3 WIRE	ML3	ML3-15R	ML3-15P				
FSL CONFIGURATIONS	28V DC, 2 POLE, 3 WIRE GROUNDING	FSL1			FSL1-30R	FSL1-30P		
FSL CONFIGURATIONS	120V, 400HZ, 2 POLE, 3 WIRE GROUNDING	FSL2			FSL2-30R	FSL2-30P		
FSL CONFIGURATIONS	120V, 400 HZ, 3-PHASE 3 POLE, 4 WIRE GROUNDING	FSL3			FSL3-30R	FSL3-30P		
FSL CONFIGURATIONS	120/208V, 3 Ø Y, 400 HZ 4 POLE, 5 WIRE GROUNDING	FSL4			FSL4-30R	FSL4-30P		
MARINE SHIP-TO-SHORE	125V, 2 POLE, 3 WIRE GROUNDING	SS1					SS1-50R	SS1-50P
MARINE SHIP-TO-SHORE	125/250V, 3 POLE, 4 WIRE GROUNDING	SS2					SS2-50R	SS2-50P
TRAVEL TRAILER	120V AC, 2 POLE, 3 WIRE GROUNDING	TT			TT-30R	TT-30P		

NOTE: BLANK SPACES RESERVED FOR FUTURE CONFIGURATIONS

© Copyright 2002 by the National Electrical Manufacturers Association.

NEMA CONFIGURATIONS FOR STRAIGHT BLADE PLUGS AND RECEPTACLES

DESCRIPTION		NEMA NUMBER	15 AMPERE		20 AMPERE		30 AMPERE		50 AMPERE		60 AMPERE	
			RECEPTACLE	PLUG	RECEPTACLE	PLUG	RECEPTACLE	PLUG	RECEPTACLE	PLUG	RECEPTACLE	PLUG
2-POLE 2-WIRE	125V	1	1-15R	1-15P POLARIZED; NON POLAR		1-20P MATES WITH 5-20R		1-30P MATES WITH 5-30R				
	250V	2		2-15P MATES WITH 6-15R	2-20R	2-20P	2-30R	2-30P				
	277V AC	3										
	600V	4										
2-POLE 3-WIRE GROUNDING	125V	5	5-15R	5-15P	5-20R	5-20P	5-30R	5-30P	5-50R	5-50P		
	125V	5ALT			5ALT-20R							
	250V	6	6-15R	6-15P	6-20R	6-20P	6-30R	6-30P	6-50R	6-50P		
	250V	6ALT			6ALT-20R							
	277V AC	7	7-15R	7-15P	7-20R	7-20P	7-30R	7-30P	7-50R	7-50P		
	347V AC	24	24-15R	24-15P	24-20R	24-20P	24-30R	24-30P	24-50R	24-50P		
	480V AC	8										
	600V AC	9										
3-POLE 3-WIRE	125 / 250V	10			10-20R	10-20P	10-30R	10-30P	10-50R	10-50P		
	3 Ø 250V	11	11-15R	11-15P	11-20R	11-20P	11-30R	11-30P	11-50R	11-50P		
	3 Ø 480V	12										
	3 Ø 600V	13										
3-POLE 4-WIRE GROUNDING	125 / 250V	14	14-15R	14-15P	14-20R	14-20P	14-30R	14-30P	14-50R	14-50P	14-60R	14-60P
	3 Ø 250V	15	15-15R	15-15P	15-20R	15-20P	15-30R	15-30P	15-50R	15-50P	15-60R	15-60P
	3 Ø 480V	16										
	3 Ø 600V	17										
4-POLE 4-WIRE	3 Ø Y 120 / 208V	18	18-15R	18-15P	18-20R	18-20P	18-30R	18-30P	18-50R	18-50P	18-60R	18-60P
	3 Ø Y 277 / 480V	19										
	3 Ø Y 347 / 600V	20										
4-POLE 5-WIRE GROUNDING	3 Ø Y 120 / 208V	21										
	3 Ø Y 277 / 480V	22										
	3 Ø Y 347 / 600V	23										

NOTE: BLANK SPACES RESERVED FOR FUTURE CONFIGURATIONS

NEMA CONFIGURATIONS FOR LOCKING PLUGS AND RECEPTACLES

DESCRIPTION		NEMA NUMBER	15 AMPERE		20 AMPERE		30 AMPERE		50 AMPERE		60 AMPERE	
			RECEPTACLE	PLUG	RECEPTACLE	PLUG	RECEPTACLE	PLUG	RECEPTACLE	PLUG	RECEPTACLE	PLUG
2-POLE 2-WIRE	125V	1	L 1-15R	L 1-15P								
	250V	2			L 2-20R	L 2-20P						
	277V AC	3										
	600V	4										
2-POLE 3-WIRE GROUNDING	125V	5	L 5-15R	L 5-15P	L 5-20R	L 5-20P	L 5-30R	L 5-30P	L 5-50R	L 5-50P	L 5-60R	L 5-60P
	250V	6	L 6-15R	L 6-15P	L 6-20R	L 6-20P	L 6-30R	L 6-30P	L 6-50R	L 6-50P	L 6-60R	L 6-60P
	277V AC	7	L 7-15R	L 7-15P	L 7-20R	L 7-20P	L 7-30R	L 7-30P	L 7-50R	L 7-50P	L 7-60R	L 7-60P
	347V AC	24			L24-20R	L24-20P						
	480V AC	8			L 8-20R	L 8-20P	L 8-30R	L 8-30P	L 8-50R	L 8-50P	L 8-60R	L 8-60P
	600V AC	9			L 9-20R	L 9-20P	L 9-30R	L 9-30P	L 9-50R	L 9-50P	L 9-60R	L 9-60P
3-POLE 3-WIRE	125 / 250V	10			L10-20R	L10-20P	L10-30R	L10-30P				
	3 Ø 250V	11	L11-15R	L11-15P	L11-20R	L11-20P	L11-30R	L11-30P				
	3 Ø 480V	12			L12-20R	L12-20P	L12-30R	L12-30P				
	3 Ø 600V	13					L13-30R	L13-30P				
3-POLE 4-WIRE GROUNDING	125 / 250V	14			L14-20R	L14-20P	L14-30R	L14-30P	L14-50R	L14-50P	L14-60R	L14-60P
	3 Ø 250V	15			L15-20R	L15-20P	L15-30R	L15-30P	L15-50R	L15-50P	L15-60R	L15-60P
	3 Ø 480V	16			L16-20R	L16-20P	L16-30R	L16-30P	L16-50R	L16-50P	L16-60R	L16-60P
	3 Ø 600V	17					L17-30R	L17-30P	L17-50R	L17-50P	L17-60R	L17-60P
4-POLE 4-WIRE	3 Ø Y 120 / 208V	18			L18-20R	L18-20P	L18-30R	L18-30P				
	3 Ø Y 277 / 480V	19			L19-20R	L19-20P	L19-30R	L19-30P				
	3 Ø Y 347 / 600V	20			L20-20R	L20-20P	L20-30R	L20-30P				
4-POLE 5-WIRE GROUNDING	3 Ø Y 120 / 208V	21			L21-20R	L21-20P	L21-30R	L21-30P	L21-50R	L21-50P	L21-60R	L21-60P
	3 Ø Y 277 / 480V	22			L22-20R	L22-20P	L22-30R	L22-30P	L22-50R	L22-50P	L22-60R	L22-60P
	3 Ø Y 347 / 600V	23			L23-20R	L23-20P	L23-30R	L23-30P	L23-50R	L23-50P	L23-60R	L23-60P

NOTE: BLANK SPACES RESERVED FOR FUTURE CONFIGURATIONS

© Copyright 2002 by the National Electrical Manufacturers Association.

NEMA CONFIGURATONS FOR 20A / 30A 3, 4, AND 5 WIRE LOCKING PLUGS AND RECEPTACLES

DESCRIPTION		NEMA NUMBER	20 AMPERE		30 AMPERE		
			RECEPTACLE	PLUG	RECEPTACLE	PLUG	
2-POLE 3-WIRE GROUNDING	125V	5	L 5-20R	L 5-20P	L 5-30R	L 5-30P	
	250V	6	L 6-20R	L 6-20P	L 6-30R	L 6-30P	
	277V AC	7	L 7-20R	L 7-20P	L 7-30R	L 7-30P	
	347V AC	24	L24-20R	L24-20P			
	480V AC	8	L 8-20R	L 8-20P	L 8-30R	L 8-30P	
	600V AC	9	L 9-20R	L 9-20P	L 9-30R	L 9-30P	
3-POLE 3-WIRE	125 / 250V	10	L10-20R	L10-20P	L10-30R	L10-30P	
	3 Ø 250V	11	L11-20R	L11-20P	L11-30R	L11-30P	
	3 Ø 480V	12	L12-20R	L12-20P	L12-30R	L12-30P	
	3 Ø 600V	13			L13-30R	L13-30P	
3-POLE 4-WIRE GROUNDING	125 / 250V	14	L14-20R	L14-20P	L14-30R	L14-30P	
	3 Ø 250V	15	L15-20R	L15-20P	L15-30R	L15-30P	
	3 Ø 480V	16	L16-20R	L16-20P	L16-30R	L16-30P	
	3 Ø 600V	17			L17-30R	L17-30P	
4-POLE 4-WIRE	3 Ø Y 120 / 208V	18	L18-20R	L18-20P	L18-30R	L18-30P	
	3 Ø Y 277 / 480V	19	L19-20R	L19-20P	L19-30R	L19-30P	
	3 Ø Y 347 / 600V	20	L20-20R	L20-20P	L20-30R	L20-30P	
4-POLE 5-WIRE GROUNDING	3 Ø Y 120 / 208V	21	L21-20R	L21-20P	L21-30R	L21-30P	
	3 Ø Y 277 / 480V	22	L22-20R	L22-20P	L22-30R	L22-30P	
	3 Ø Y 347 / 600V	23	L23-20R	L23-20P	L23-20R	L23-20P	

NOTE: BLANK SPACES RESERVED FOR FUTURE CONFIGURATIONS

© Copyright 2002 by the National Electrical Manufacturers Association.