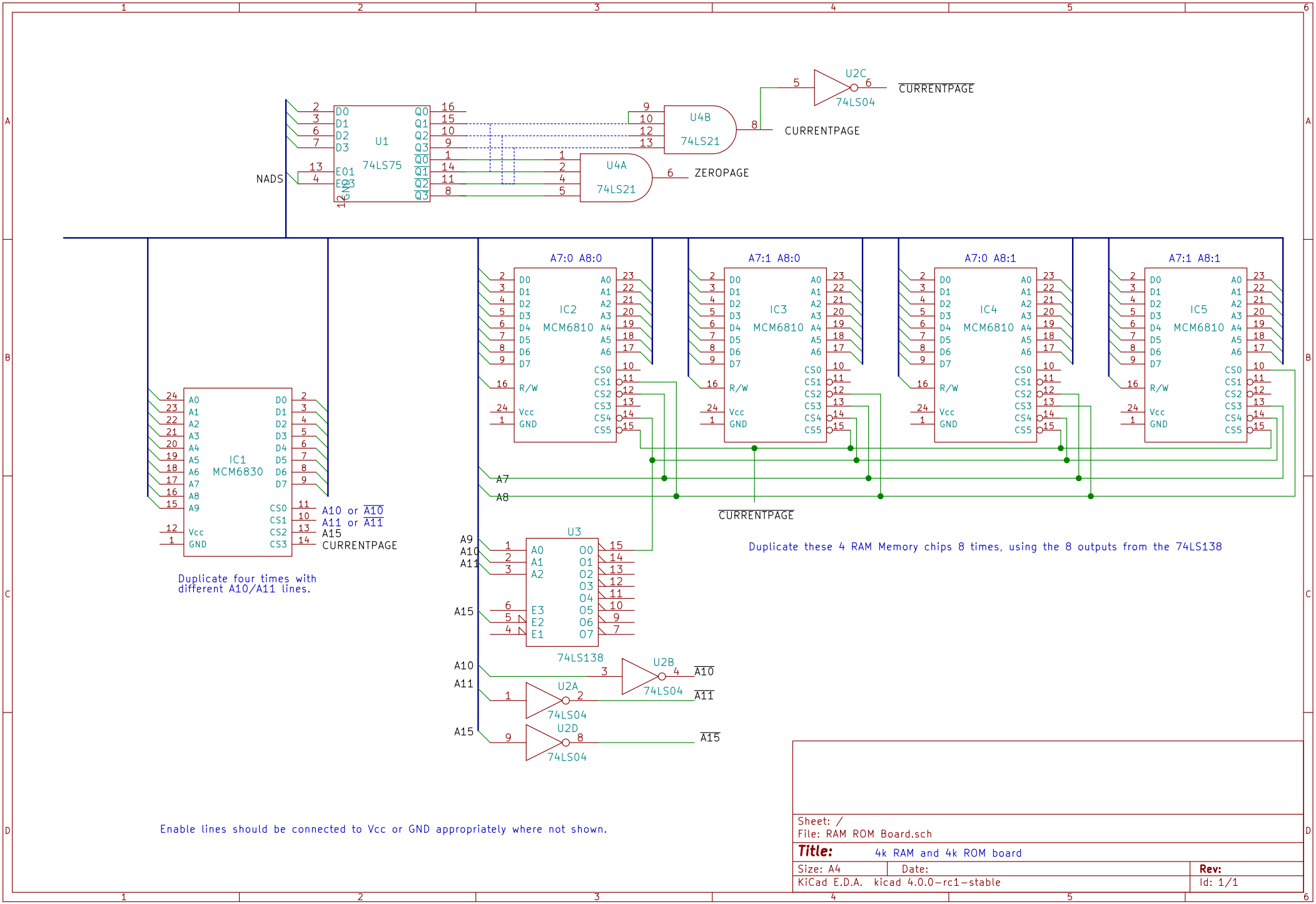

Sheet: /
File: RAM ROM Board.sch

Title: 4k RAM and 4k ROM board

Size: A4	Date:	Rev:
KiCad E.D.A. kicad 4.0.0-rc1-stable		Id: 1/1