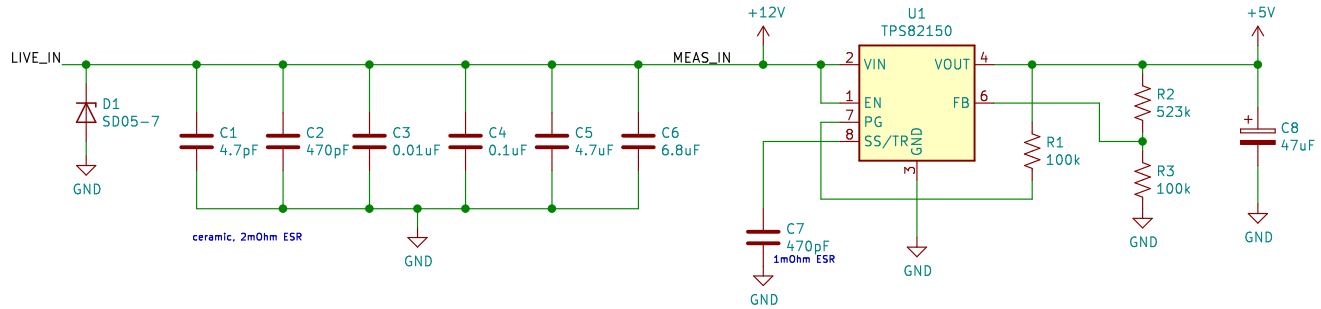

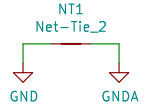

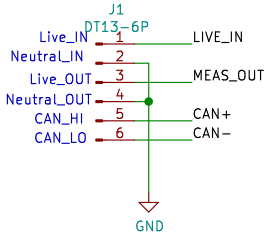

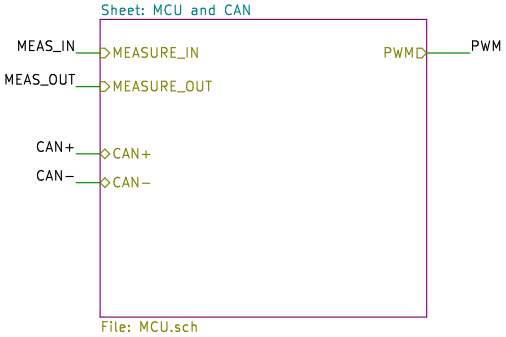

CAN+ (CANH) and CAN- (CANL) renamed
to use differential pair KiCAD feature

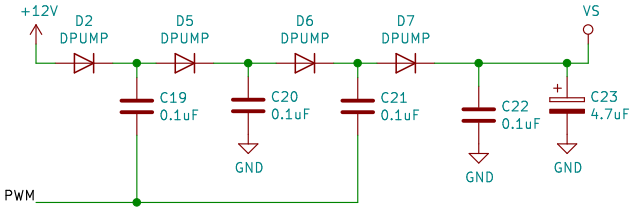

Unloaded +22V out
35 to 50V cap and diode
rating

Approximately 50% duty cycle
at 50KHz from PWM module

NOTES

The different grounds should only be connected at one junction using the net tie

The grounds should have their own planes and the power, digital, and analog sections should tried to be kept separate - different regions of the board

Bypass capacitors need to be placed close to the IC and must be physically between the power and IC

The TVS (zener) diodes need to be placed physically before the capacitors and before any connections to power sensor

Temp IC should be close to the power sensor

MEAS_IN needs to be physically placed after caps

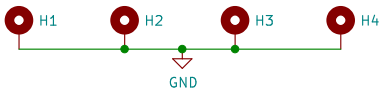

University of Central Florida - HKN Zeta Chi

Sheet: /
File: PowerSenseModule.sch

Title: Power Sense Module - Main Page and Power

Size: A4	Date: 2019-12-18	Rev:
KiCad E.D.A. kicad (5.1.2)-1		Id: 1/2

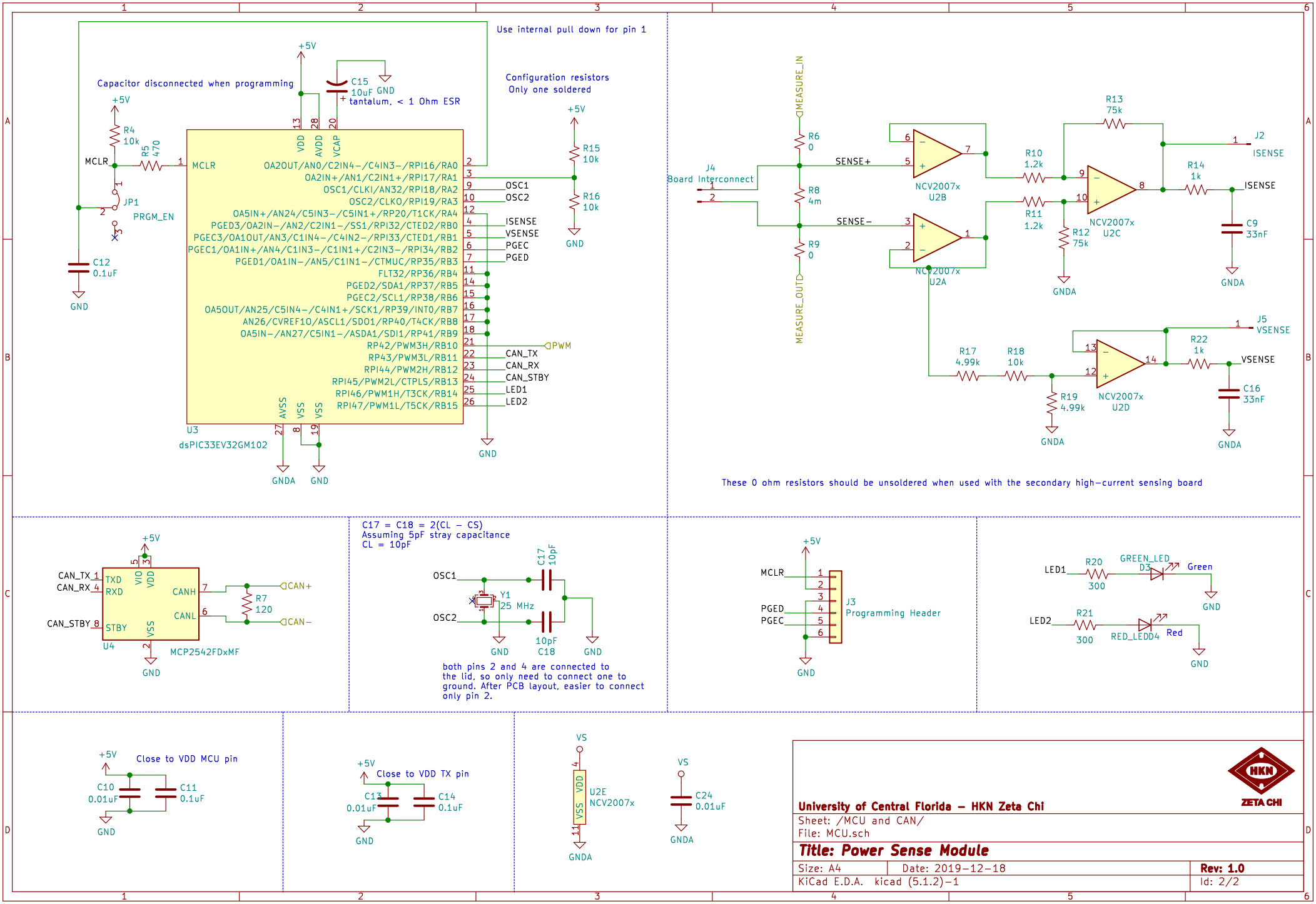
Use internal pull down for pin 1
Capacitor disconnected when programming
Configuration resistors
Only one soldered
+5V
C15
10uF
tantalum, < 1 Ohm ESR
GND
R4
10k
R5
470
MCLR
JP1
PRGM_EN
C12
0.1uF
VDD
AVDD
VCAP
OA2OUT/AN0/C2IN4-/C4IN3-/RPI16/RA0
OA2IN+/AN1/C2IN1+/RPI17/RA1
OSC1/CLKI/AN32/RPI18/RA2
OSC2/CLKO/RPI19/RA3
OA5IN+/AN24/C5IN3-/C5IN1+/RP20/T1CK/RA4
PGED3/OA2IN-/AN2/C2IN1-/SS1/RPI32/CTED2/RB0
PGEC3/OA1OUT/AN3/C1IN4-/C4IN2-/RPI33/CTED1/RB1
PGEC1/OA1IN+/AN4/C1IN3-/C1IN1+/C2IN3-/RPI34/RB2
PGED1/OA1IN-/AN5/C1IN1-/CTMUC/RP35/RB3
FLT32/RP36/RB4
PGED2/SDA1/RP37/RB5
PGEC2/SCL1/RP38/RB6
OA5OUT/AN25/C5IN4-/C4IN1+/SCK1/RP39/INT0/RB7
AN26/CVREF10/ASCL1/SDO1/RP40/T4CK/RB8
OA5IN-/AN27/C5IN1-/ASDA1/SDI1/RP41/RB9
RP42/PWM3H/RB10
RP43/PWM3L/RB11
RPI44/PWM2H/RB12
RPI45/PWM2L/CTPLS/RB13
RPI46/PWM1H/T3CK/RB14
RPI47/PWM1L/T5CK/RB15
OSC1
OSC2
ISENSE
VSENSE
PGEC
PGED
PWM
CAN_TX
CAN_RX
CAN_STBY
LED1
LED2
AVSS
VSS
U3
dsPIC33EV32GM102
GNDA
R15
10k
R16
10k
MEASURE_IN
MEASURE_OUT
R6
0
R8
4m
R9
0
J4
Board Interconnect
SENSE+
SENSE-
NCV2007x
U2B
U2A
U2C
U2D
R10
1.2k
R11
1.2k
R12
75k
R13
75k
R14
1k
R17
4.99k
R18
10k
R19
4.99k
R22
1k
J2
ISENSE
J5
VSENSE
C9
33nF
C16
33nF
These 0 ohm resistors should be unsoldered when used with the secondary high-current sensing board
CAN_TX
CAN_RX
CAN_STBY
TXD
RXD
STBY
VIO
VDD
VSS
CANH
CANL
U4
MCP2542FDxMF
R7
120
CAN+
CAN-
C17 = C18 = 2(CL - CS)
Assuming 5pF stray capacitance
CL = 10pF
OSC1
OSC2
Y1
25 MHz
C17
10pF
C18
10pF
both pins 2 and 4 are connected to the lid, so only need to connect one to ground. After PCB layout, easier to connect only pin 2.
MCLR
PGED
PGEC
J3
Programming Header
LED1
LED2
R20
300
R21
300
GREEN_LED
D3
Green
RED_LED
D4
Red
Close to VDD MCU pin
C10
0.01uF
C11
0.1uF
Close to VDD TX pin
C13
0.01uF
C14
0.1uF
VS
U2E
NCV2007x
C24
0.01uF
HKN
ZETA CHI
University of Central Florida - HKN Zeta Chi
Sheet: /MCU and CAN/
File: MCU.sch
Title: Power Sense Module
Size: A4
Date: 2019-12-18
Rev: 1.0
KiCad E.D.A. kicad (5.1.2)-1
Id: 2/2