IEEE MICRO ELECTRONICS BOOTCAMP

1 : 4 Demultiplexer

When date=1

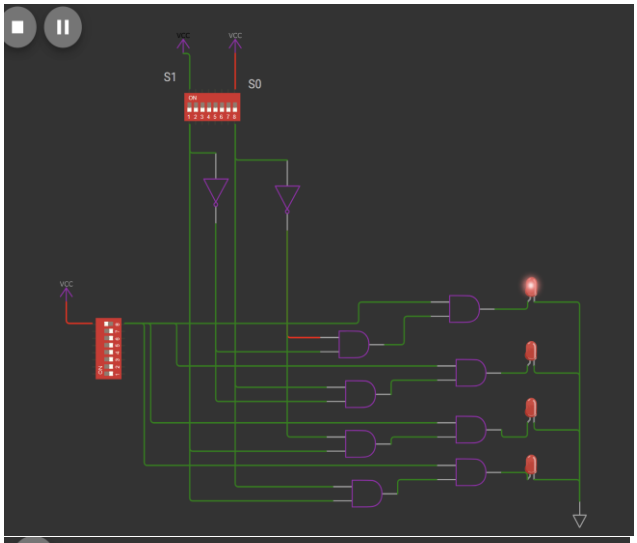

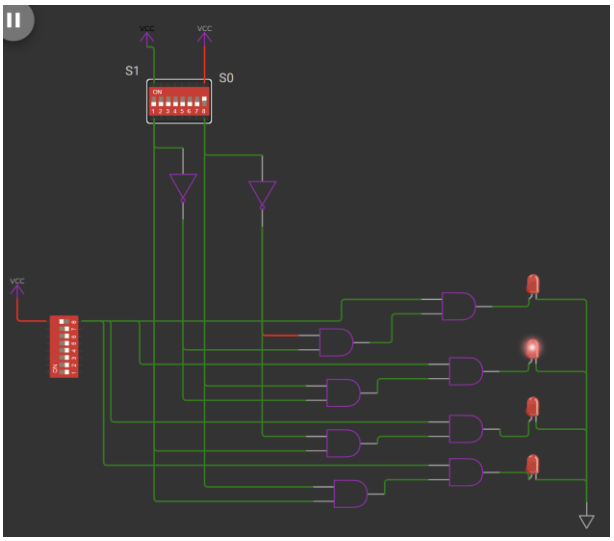

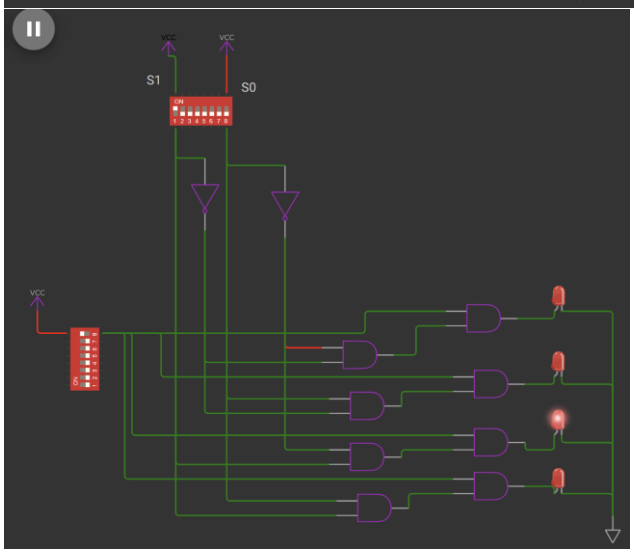

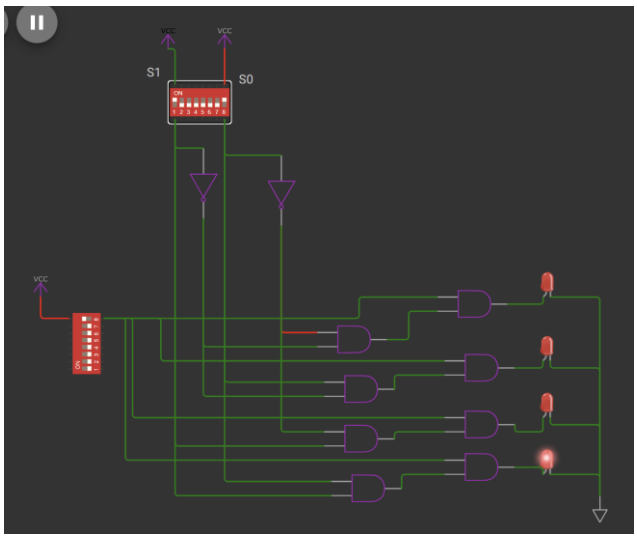

TRUTH TABLE

Select		Data	Output			
S1	S0	A	O_0	O_1	O_2	O_3
0	0	0	0	0	0	0
0	0	1	1	0	0	0
0	1	0	0	0	0	0
0	1	1	0	1	0	0
1	0	0	0	0	0	0
1	0	1	0	0	1	0
1	1	0	0	0	0	0
1	1	1	0	0	0	1