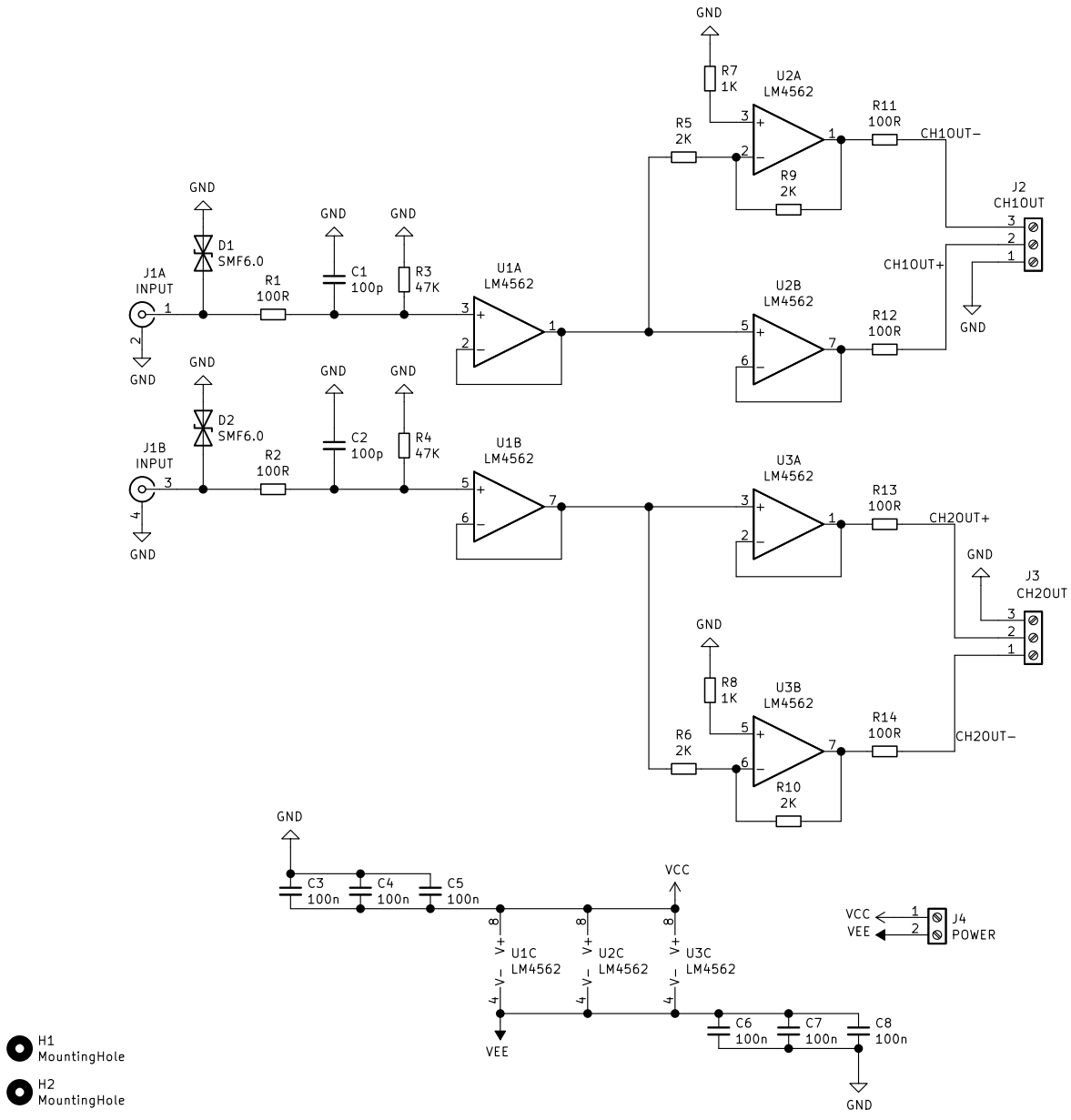

H1 MountingHole

H2 MountingHole

H3 MountingHole

H4 MountingHole

Sheet: /
File: input_buffer_RCA.sch

Title:

Size: A4	Date:	Rev:
KiCad E.D.A. kicad (5.1.6-0)		Id: 1/1