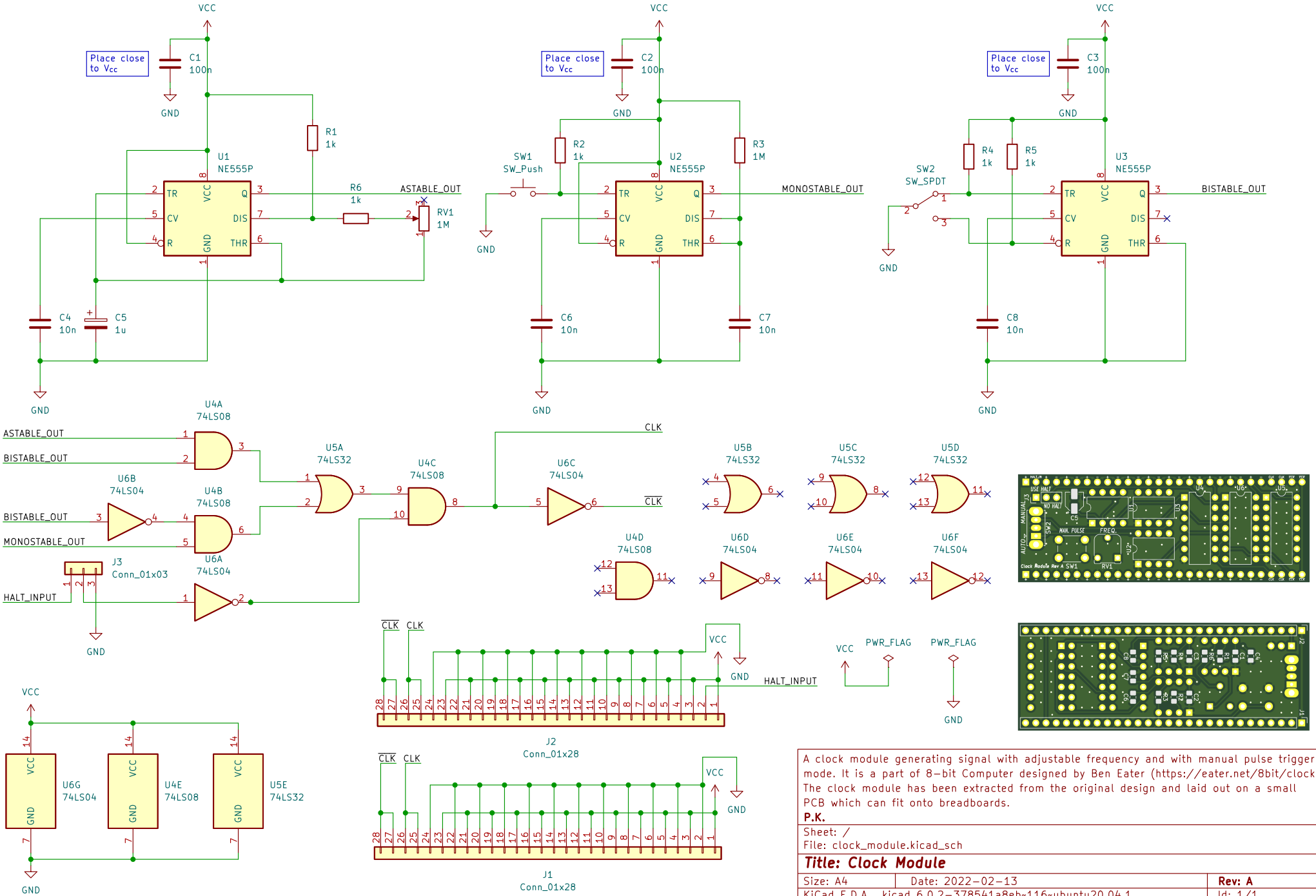

A clock module generating signal with adjustable frequency and with manual pulse trigger mode. It is a part of 8-bit Computer designed by Ben Eater (https://eater.net/8bit/clock). The clock module has been extracted from the original design and laid out on a small PCB which can fit onto breadboards.

P.K.

Sheet: /
File: clock_module.kicad_sch

Title: Clock Module

Size: A4	Date: 2022-02-13	**Rev: A**
KiCad E.D.A. kicad 6.0.2-378541a8eb-116-ubuntu20.04.1		Id: 1/1