International Journal of Scientific Research in Engineering and Management (IJSREM)
Volume: 04 Issue: 03 | Mar -2020 ISSN: 2582-3930

TRAFFIC SIGNAL SURVIELLANCE SYSTEM TO OVERCOME TRAFFIC SIGNAL VIOLATION

Shubham Wailthare [1] *Payal Jarviya*[2] *Chandrakala Dharmik*[3]
Sneha Gujwar[4] *Sonu Gharde*[5] *prof. Rahul Kadam*
Department of Electronics & Telecommunication
Nagpur Institute of Technology, Nagpur, Maharashtra, India

Abstract—one of the major problem in India is traffic signal violation at urban intersection, which requires emergency attentions. Which results in the violation of traffic rules by the people, it causes increase in accidental rates at traffic signals and bribery cases. In current technique of controlling the traffic it is not possible to punish all the culprits who are responsible for violating the traffic rules because this technique of controlling the traffic does not or have less evidence of the culprits. Therefore, the need of the surveillance system for traffic signal to identify the vehicle, which is violating the traffic rules. The detection of the vehicle includes capturing the particular vehicle's image and recognition of number plate using online number plate detection technique with the help of API cloud. After detection of number plate that data will be sent to the RTO (Regional Transport office) for further process, so that RTO can take action against the vehicle's driver. This project report presents the method to use camera at traffic junctions for surveillance of traffic signal by detection of vehicle number plate. Thereby aiming at reducing the traffic violation, which will help to lower accidental rate and bribery cases.

Index Terms— Recognition of number plates, Reduces traffic signal violation, Lower bribery rate, safety analysis.

INTRODUCTION

Road transport being one of the backbones of the industrialization, road traffic is one of the major issues of the modern world where cities are always developing. According to the traffic reports produce by the world's Major countries India is more populated than other countries.Due to the rising population in the urban areas freight vehicles as well as travelers have to spend so much time in traffic. There are lot of people those who are violating traffic rules, which increases the accidental rates & bribery cases. The main way to avoid traffic rules violation in India at present is with the help of traffic police. This method is not completely effective to prevent the traffic rule violation. Therefore we need an effective way to lower the traffic rules violation using technology and less manpower.To implement this project we will be using the cameras which had already installed by Indian government on each traffic signal.Our methodology is based on two parts which are identification of vehicle driver and sending the evidence of violation of the signal with time and date to the RTO (Regional Transport Office).To avoid traffic rule violation this system is proposed. This system will help the "Regional Transport Office" to identify the vehicle's driver who is responsible for traffic rules violation. We plan on implementing the project for one junction "Proof-of-Concept" for this project, which includes traffic lights, IR-sensors, Raspberry Pi microcontroller. The raspberry-pi controller works as a central console.

PROPOSED METHODOLOGY

The proposed methodology has been outlinedbelow:

Step 1: The live feed from a surveillance camera istaken:
Pan tilt and zoom (PTZ) camera which gives clear view up to 300 m range.
Multi sensor camera with recording range between 80-100 m. CCTV cameras has been installed and the live feed is fed into a desktop for the purpose of analysis.
Fixed cameras and dome cameras are used. The cameras are installed with suitable angle to provide wider views of traffic signals.

Step 2: Vehicle detection with the help of IR sensors:
When any vehicle violate the signal the IR sensor will sense it and Since the GPIO pins of Raspberry Pi are 3.3V, a current limiting resistor is not mandatory. If desired a resistor of value 470 ohms can be added between the ground pin of LEDs and Raspberry Pi. The whole circuit is powered by a 5V mobile charger through the micro USB port of the Raspberry pi. Due to this interfacing between IR sensor and Raspberry –

pi System will indicate to the camera to take picture of the vehicle who violated the signal.

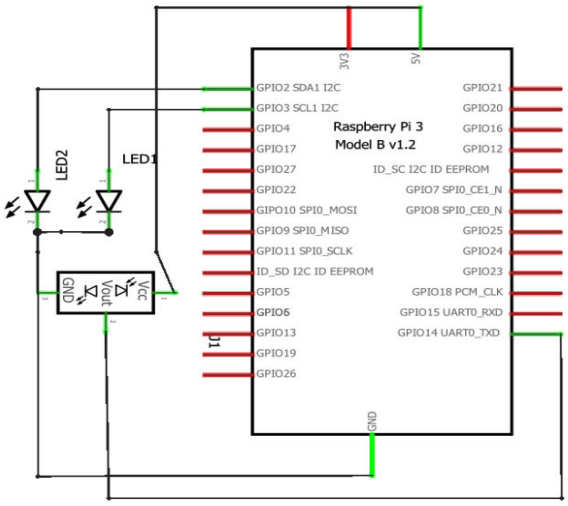

Fig. (a)Circuit diagram for connecting raspberry-pi with IR sensor

Step 3: Enhancement of captured image with the help of Google cloud API image recognition:

ANPR (Automatic number plate recognition) or ALPR (Automatic license plate recognition) is a software which decodes vehicle's number plate. In this technique of detection number plate, captured images of vehicle number plate is send to the plate recognizer's API cloud. After the processing on Images, number / license plate can get decoded in less than 50 milliseconds.

Step 4: Sending the data to RTO (Regional Transport Office) Via MySQL

Sending the information to RTO (Regional Transport Office) Via MySQL,MySQL is an oracle-backed open source computer database management system (RDBMS) supported structured command language (SQL). MySQL is predicated on a client-server model.MySQL server is obtainable as a separate program to be used in an exceedingly client-server networked environment and as a library which will be embedded (or linked) into separate applications. MySQL operates together with several utility programs which support the administration of MySQL databases. Although MySQL is usually installed on just one machine, it's ready to send the database to multiple locations, as users are ready to access it via different MySQL client interfaces. These interfaces send SQL statements to the server and so display the results.

A, B, C& D are the four ways at the square and four different cameras are placed at each way with a IR sensor. When the A path gets the green signal, the sensors of the other three ways will gets activated, except the sensor which is located at A. At that time if the vehicle at the way B/C/D try to break to the signal, system will alert the cameras at path B, C and D. For example if vehicle at path B breaks the signal then the sensor at path B will sense it and give the alert to the respective cameras. The camera will capture the image of that vehicle, the vehicle's number plate is send to the plate recognizer's API cloud. After the processing on Images, number / license plate can get decoded in less than 50 milliseconds and then that data will be sent to the RTO office for further process.

BLOCK DIAGRAM

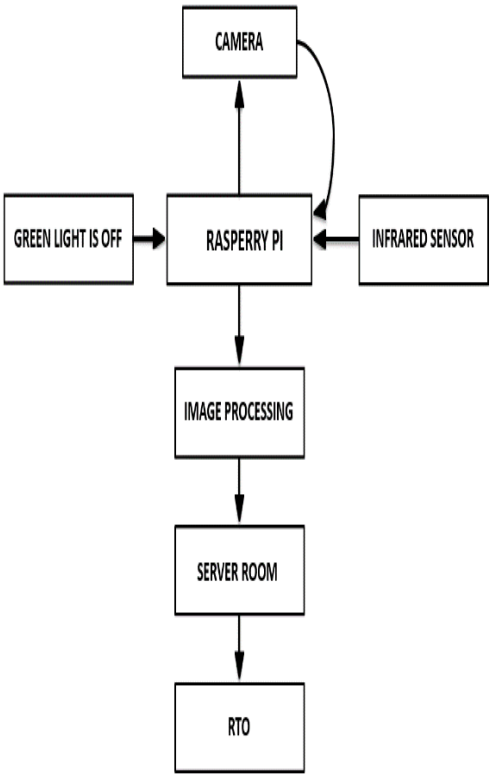

Fig. (b) Block diagram of proposed system

FLOW CHART

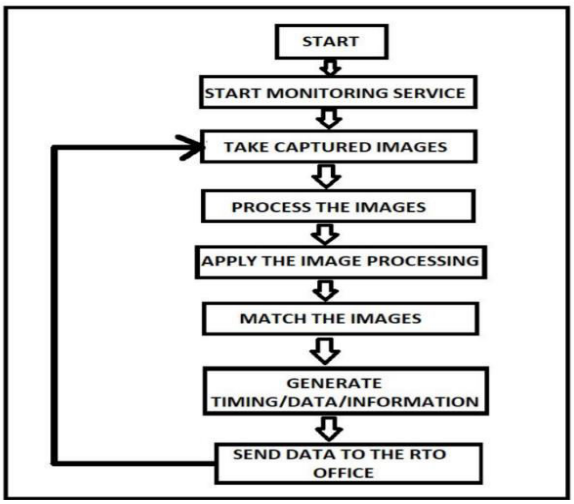

Fig. (c) Flow chart of proposed system

RESULT AND DISCUSSION

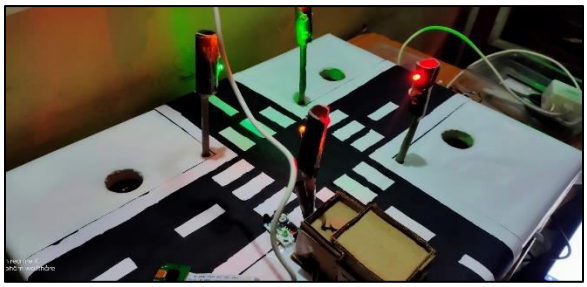

Fig. (d) Model of traffic surveillance system to overcome traffic signal violation

Here, the results obtained from two data sets are presented: detection and tracking of vehicle. First the Image is captured and then detection of the vehicle takes place.

Fig . (e) Captured image of vehicle while violating signal

The picture captured by the camera fig. (e) Is given to the system and vehicle number plate is send to the plate recognizer's API cloud. After the processing on Images, number / license plate can get decoded in less than 50 milliseconds in the system which results in displaying the number of vehicle on the system's screen fig (f).

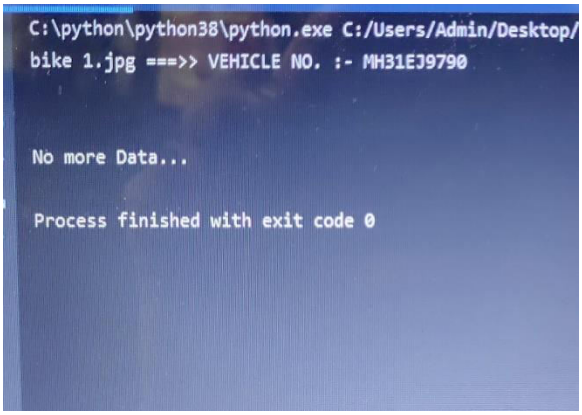

Fig. (f) Vehicle number on the system's screen

After this the details with captured image is sent to the RTO (Regional Transport Office) with the help of MySQL Data base.

ACKNOWLEDGEMENT

We would like to thank my guide Asst. Prof Rahul Kadam for her help and support throughout theimplementation of this prototype.

CONCLUSION

Existing traffic control system does not or have less evidence about the culprits. It also requires more man power and increase the bribery cases. Therefore it is not possible to punish all the culprits who are responsible for the violation of the traffic rules. In our proposed "Traffic Surveillance System", we are introducing extra circuitry in current traffic control system. Which will help RTO to collect more information about the culprits to recognize and punish them.

REFERENCES

[1]Ayob Johari, "Image processing of moving object captured and received by GPRS/GSM modem," published in 2013. Faculty of Electrical and Electronics Engg. Universiti of Tun hussein onn Malaysai.

[2]A. Kurniawan, "Speed Monitoring for Multiple Vehicle Using Closed Circuit Television (CCTV)

Camera, "published in 2018. Department of Computer Engineering Institute Teknologi Sepuluh Nopember Surabaya, Indonesia.

[3]Ashwin S, "Automatic control of road traffic using video processing", published in 2017. Department of Electronics and Communication Engineering, K. S. Institute of Technology, Bangalore, Karnataka, India .

[4]Paul Jasmine Rani. L, "Dynamic traffic management system using infrared(IR) and internet of things(IOT)", published in 2017. Asst .Prof, Department of Computer Science, Rajalakshmi Institute of Technology, India.

[5]Pooja Sharma, "Image Processing based Degraded Camera Captured Document Enhancement for Improved OCR Accuracy", published in 2016. Department of Computer Science & Engineering Amity University, Uttar Pradesh, India.

[6]Jayati Ghosh, "Tracking human intrusion through a CCTV", published in 2015. Department of Computer Science St. Xavier's College, Kolkata, India.

[7]Anurag Kanungo, "Smart Traffic Lights Switching and Traffic Density Calculation using Video Processing". Published in 2014. University Institute of Engineering and Technology Panjab University Chandigarh, India .

[8]Xujun Peng, "Automated image quality assessment for camera captured OCR", published in 2011. Raytheon BBN Technologies 10 Moulton St., Cambridge, MA 02138.

[9]S. A. Ahmed, "Active and passive infrared sensors for vehicular traffic control. "published in 1994. The City College of New York Electrical Engineering Department 140 St. and Convent Ave. New York , New York 10031 .

[10]Tarik Hussain, "Overhead infrared vehicle sensor for traffic control. "published in 1993. The City college of New York Electrical Engineering Department New York, New York 10031 .