ORPHEUM THEATRE AUDIO

- MIC LEVEL
- LINE LEVEL
- SPEAKER LEVEL
- AC POWER
- AMP RACKS
- CLEAR COM
- PROGRAM SOUND
- LINKS

VANCOUVER CIVIC THEATRES		
COVER PAGE	08/05/2013	By Jerry Gildemeester

LEGEND
PAR=POWER AMP ROOM
ACR=AUDIO CONTROL ROOM

ORPHEUM

STAGE	08/05/2013

OFF UP STAGE RIGHT
CLEAR COM JACK

CABLE ACCESS HOLE TO X-OVER

08/05/2013

ON STAGE AUDIO ACCESS

UP STAGE RIGHT
- -12 XLR FEMALE TO SL ALCOVE TERMINATES AT XLR FAN OUT
- -AUX AMP OUTPUTS 1-2-5-6 SPEAKON
- -30 AMP TLG AUDIO POWER, 7amp P-CON
- -CLEAR COM JACK

UP STAGE LEFT
- -12 XLR FEMALE TO SL ALCOVE TERMINATES AT XLR FAN OUT
- -AUX AMP OUTPUTS 1-2-5-6 SPEAKON
- -30 AMP TLG AUDIO POWER ,7amp P-CON

STAGE RIGHT ALCOVE
- MIC LINES 28-29 TO ACR
- MIC LINES 47-54 TO ACR AND SL

ACR PATCH FIELD

STAGE LEFT ALCOVE
- -MIC LINES 1-15 TO ACR
- -MIC LINES 47-54 TO ACR AND SR
- -12 LINE XLR SNAKES FROM USL & USR(FAN OUTS ARE PATCHABLE)
- -6 HANGING MIC LINES(PATCHABLE)
- MIC LINES 31-38 VIA SUB BOX

OFF STAGE RIGHT
- L-9 & L-10 MIC LINES
- MIC LINE 46
- CLEAR COM MASTER STATION
- ACCESS TO AUDIO TIE IN 200 AMP 3 PHASE

OFF STAGE LEFT
- CLEAR COM STATION
- COM JACK FROM SR
- ACCESS TO AUDIO TIE IN 200 AMP 3 PHASE

DOWN STAGE RIGHT DOORWAY
- SUB AMP OUTPUTS 1&2 EP-4
- AUX AMP OUTPUTS 1-2-3-4 SPEAKON
- 30 AMP TLG AUDIO POWER,7amp P-CON
- XLR TIE LINES 1-2-3-4 to ACR

DOWN STAGE LEFT DOORWAY
- SUB AMP OUTPUTS 1&2 EP-4
- AUX AMP OUTPUTS 1-2-3-4 SPEAKON
- 30 AMP TLG AUDIO POWER,7amp P-CON
- XLR TIE LINES 5-6-7-8 to ACR

1-TON SOUND RIGGING POINT

1-TON SOUND RIGGING POINT

DOWN STAGE APRON
MIC LINES 17-25 TO ACR

MIC LINE 25 24 23 22 21 20 19 18 MIC LINE17

MIC LINE 27

MIC LINE 26

EXCEPT FOR ZONES ON THIS PANEL CLEAR COM IS DISTRIBUTED VIA DRY LINES AT SOUND BOOTH

08/05/2013

CLEARCOM MASTER STATION AT SR

MS-232 CLEAR COM MASTER STATION

- HEADSET OUTPUT PATCHED TO 2 JACKS ON FRONT PANEL WITH GAIN CONTROL FOR EACH.
- ON FRONT PANEL MALE XLRS ARE A & B OUTPUTS FROM MASTER STATION.

- **FEMALE XLRS FEED A AND B OUTPUTS ON DISTRIBUTION PANEL BELOW**

LEGEND
PAR=POWER AMP ROOM
ACR=AUDIO CONTROL ROOM

ORPHEUM THEATRE		
COM	08/05/2013	NO SCALE

08/05/2013

CLEARCOM DISTRIBITION AT SR

OLD COM BOX MOUNTED ON WALL OFF STAGE LEFT

SOUND BOOTH A	SOUND BOOTH B	CBC ROOM	SR DIMMER BEACH	CARP OFFICE A	CARP OFFICE B	SL MAIN BOX	SL XLR ON MAIN BOX	TO SOUND BOOTH	GREEN ROOM(022)
			BACK WALL					OLD LINE	CREW ROOM(023)
1	2	3	4	5	6	7	8	9	10

PROPS(103)	PROD OFFICE(104	MAESTRO (200)	CBC ROOM (011)	LOADING DOCK(100)	WORKSHOP (025)
HARP(005) STORAGE	STAGE DOOR(105)	DR. ROOM A (004)	BASS/ CELLO(010)		
11	12	13	14	15	16
		BASEMENT HALL(013)			

ORPHEUM THEATRE		
COM	08/05/2013	NO SCALE

08/05/2013

CLEARCOM DISTRIBUTION AT ACR SOUND BOOTH

OUTPUTS FROM PANEL AT STAGE RIGHT MASTER STATION	A OUT	A OUT	A OUT	A OUT	A OUT	A OUT	A OUT	A OUT	B OUT	B OUT	B OUT	B OUT	B OUT	B OUT	B OUT	B OUT

DISTRIBUTION PANEL	SPOT 1	SPOT 2	SPOT 3	LX A	LX B	PAR JACK & ORGAN LOFT BELT PACKS	BALCONY RAIL	SOUND A	SOUND B	STAGE RIGHT DISTRO #9	REAR OF HOUSE MIX	SPARE	

LEGEND
PAR=POWER AMP ROOM
ACR=AUDIO CONTROL ROOM

ORPHEUM THEATRE		
COM	08/05/2013	NO SCALE

LEGEND
PAR=POWER AMP ROOM
ACR=AUDIO CONTROL ROOM

08/05/2013

BALCONY RAIL AUDIO ACCESS

LOCATED ON BALCONY RAIL HOUSE RIGHT

- MIC LINES 1-28 SIGNAL PATH FROM STAGE OR TO STAGE ONLY NOT TO BOOTH
-PATCH AT BALCONY RAIL 1-28 BREAKS CONTACT FROM STAGE TO ACR
-TLG POWER FED FROM SWITCH AT SM PANEL STAGE RIGHT

	16	17	18	19	20	21	22	23	24	25	26	27	1	2	3	4	5	6	7	8	9	10	11	12

BALCONY RAIL PATCH FIELD 1-28 TO STAGE ONLY
L-5 & L-6 TO ACR

	13	14	15	28										L-5	L-6									

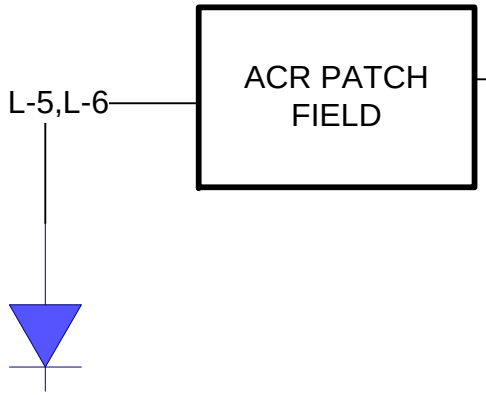

-L-5,L-6 TO ACR ROW C,5-6
-ALL OTHERS NO CONNECTION TO BOOTH
-XLR COM
-TLG POWER

BALCONY RAIL

ORPHEUM THEATRE

BALCONY RAIL	08/05/2013	NO SCALE

08/05/2013

ACR RACKS

ORPHEUM

ACR RACKS | 08/05/2013

RACK 1

- SENNHEISER SI 1013 HEARING ASSIST WITH ON-OFF SWITCH PANEL
- YAMAHA POWERED TEST SPEAKER
- BSS SOUNDWEB BLU-10 REMOTE PANEL
- CONTROL ROOM DELAY DBX ZONEPRO
- CONTROL ROOM AMP

RACK OVER WINDOW

E.Q. 1-2-KT DN 410
E.Q. 3-4 KT DN 410
E.Q. 5 KT DN 410

RACK OVER WINDOW

E.Q. 6-7 DN 410
E.Q. 8-9 DN 410
UHF SHURE A-B
UHF SHURE C-D

RACK 2

- RANE DA
- DBX 166A COMPRESSOR/LIMITER
- YAMAHA M406 PROGRAM MIXER
- LEXICON MPX 500 REVERB
- MEYER GALILEO 616 OUTPUTS ARE NORMALLED TO MEYER PROCESSORS
- DBX 480 DRIVERACK
- DBX 166A
- DBX 166XL
- DBX 266XL
- DBX266XL
- PATCH ROWS O THRU S

SERIES FOUR CONSOLE

- LEFT,RIGHT,MONO NORMALLED TO MEYER GALILEO 616 INPUTS A-B-C
- CONSOLE LEFT-RIGHT HAVE E.Q.8-9 NORMALLED INSERTED
- AUX 1,2 NORMALLY PATCHED TO LEXICON REVERB
- AUX 3,4 NORMALLY PATCHED TO OVERDOOR MONITORS WITH DBX DRIVERACK IN RACK 1 IN/OUT 3-4 INSERTED

BREAKER PANEL FOR BOOTH GEAR

RACK 3 DRIVERACK 480

- BACKSTAGE AND LOBBY-IN/OUT 1.
- SPOT BOOTH PROGRAM DISTRIBUTION IN/OUT 2.
- DRIVERACK IN/OUT 3-4 AUX 3-4 SIDE MONITORS
- PATCH BAY ROWS A-N

PLAYBACK RACK

- TASCAM CD O1U
- -HHB BURN IT CD RECORDER
- -HHB 882 DUAL BURNER
- DEVICES PATCHED TO XLR TAILS IN RACK WIRED TO PATCHFIELD IN RACK 2

08/05/2013

SOUND BOOTH/ACR NORMALLED STUFF

ORPHEUM

SOUND BOOTH | 08/05/2013

	A	1	2	3	4	5	6	7	8	9	10	11	12	13	14	15	16	17	18	19	20	21	22	23	24

PATCH ROW A 1-24 (XLR AT STAGE) NORMALLED TO SERIES FOUR MONO INPUT CHANNELS 1-24

YAMAHA M-406 PROGRAM MIXER INPUTS

- INPUTS 1-4 ARE SENNHEISER BALCONY RAIL MICS
- INPUT 5 IS FREE
- INPUT 6 IS PATCHED FROM SERIES FOUR MATRIX 8 OUTPUT
- EFFECTS INPUTS L & R ARE SM DESK CD PLAYER PLAYBACK USED FOR HEARING ASSIST PRE SHOW TESTING

YAMAHA M-406 PROGRAM MIXER OUTPUTS

- PROGRAM OUTPUTS NORMALLED TO DBX 166 THEN TO RANE SM26B THEN ON TO SENNHEISER HEARING ASSIST INFRARED SI1013 SYSTEM
- ECHO +4 OUTPUT PATCHED TO DBX 480 IN RACK # 3 INPUT # 1- OUTPUT # 1 TO PATCH ROW C-24. THIS FEEDS PROGRAM TO BACKSTAGE . SWITCH AT SM DESK CONTROLS PROGRAM TO LOBBY.

SOUNDCRAFT SERIES 4 CONSOLE

- KLARK TEKNIK 410(EQ 8-9) IS INSERTED INTO LEFT AND RIGHT MAIN OUTPUTS
- LEFT,RIGHT.MONO NORMALLED TO MEYER GALILEO 616 INPUTS A-B-C RESPECTIVELY.
- MATRIX OUTPUT 8 PATCH TO YAMAHA MIXER INPUT 6 HAS DBX 166A (ROW S 1-in, 2-out) INSERTED AND IS USED FOR DRY PROGRAM FEED TO BACKSTAGE AND LOBBY.

LEGEND

PAR=POWER AMP ROOM

ACR=AUDIO CONTROL ROOM

LEGEND
PAR=POWER AMP ROOM
ACR=AUDIO CONTROL ROOM

08/05/2013

SPOT BOOTH AUDIO ACCESS

ORPHEUM THEATRE		
SPOT BOOTH	08/05/2013	NO SCALE

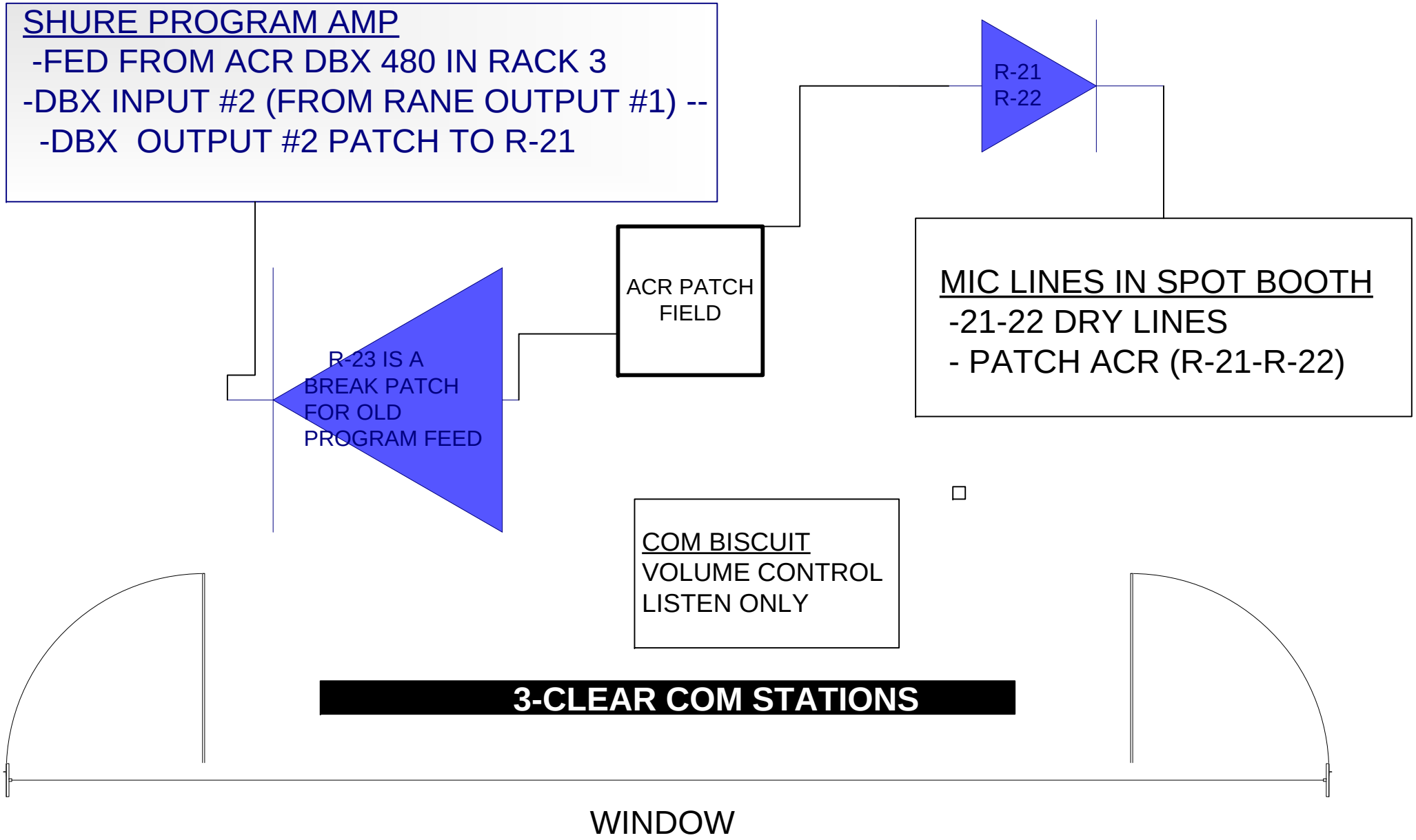

LEGEND
PAR=POWER AMP ROOM
ACR=AUDIO CONTROL ROOM

08/05/2013

LIGHTING BOOTH AUDIO ACCESS

ORPHEUM THEATRE		
LX BOOTH	08/05/2013	NO SCALE

CLEAR COM HARDWIRED IN

- HEAD SET WITH BACKPACK
- AMPLIFIED SYSTEM POWERED BY REALISTIC AMP WITH SWITCHED MIC

CONDUIT TO ACR

PROGRAM FEED HARDWIRED IN

- -FED FROM RANE DA MASTER L&R OUTPUT
- -PROGRAM FEEDS INTO RADIO SHACK AMPLIFIER. ISO X-FORMERS IN LINE

CONDUIT TO ACR

DRY LINE TO ACR

- -ACR PATCH R-24

(LEAVE PATCHED TO B-6 OVERHEAD MIC FOR LIVE PROGRAM)

CONDUIT TO ACR

ACR PATCH FIELD

LEGEND
PAR=POWER AMP ROOM
ACR=AUDIO CONTROL ROOM

08/05/2013

LOBBY AUDIO ACCESS

Upper Lobby TV

- XLR 1 NORMALLED FROM RANE DA O/P #6
- XLR 2 JACK AVAILABLE AT ACR PATCH ROW Q-19

Q 19

ACR PATCH FIELD Q 19 TO WALL OF FAME AREA

- PROGRAM FEED TO LOBBY SWITCHED ON-OFF AT SM DESK STAGE RIGHT. FED FROM ACR PATCH C-24

ORPHEUM THEATRE		
Lobby	08/05/2013	NO SCALE

LEGEND
PAR=POWER AMP ROOM
ACR=AUDIO CONTROL ROOM

08/05/2013

CEILING AUDIO ACCESS

ORPHEUM THEATRE		
CEILING	08/05/2013	NO SCALE

MIC LINES IN CEILING

- 39-44 TO ACR PATCH (ROW B 15-20)
- 39 and 41 normally plugged to organ loft C/W COUNTRYMAN MIC run in to loft
- 8 XLR AT AMP RACK 1 TO ACR PATCH (ROW L-5 13-20)
- BREAKER PANEL FOR AMP RACKS

AMP RACK 3 AMPS AND PROCESSORS FOR OVER BALCONY MSL 2'S.FOLDBACK AMPS

AMP RACK 2 AMPS AND PROCESSORS FOR FRONT FILL UPM'S,UPA SIDES,TIPS AND UNDER BALCONY UPM'S.

AMP RACK 1 PATCH BAY, SUB AMPS PROCESSORS AND SUB E.Q SOUNDWEB FOR UB DELAY AND ENHANCEMENT.

MULTI CABLE FROM ACR FEEDS MEYER PROCESSORS DIRECTLY

MEYER GALILEO 616
IN/OUT
AVAILABLE
AT PATCHFIELD
ROW # L-4

CONSOLE LEFT,RIGHT AND MONO OUTPUTS ARE NORMALLED TO GALILEO INPUTS A-B-C RESPECTIVLY.
GALILEO OUTPUTS ARE NORMALLED TO MEYER PROCESSOR INPUTS AS PER THIS DIAGRAM

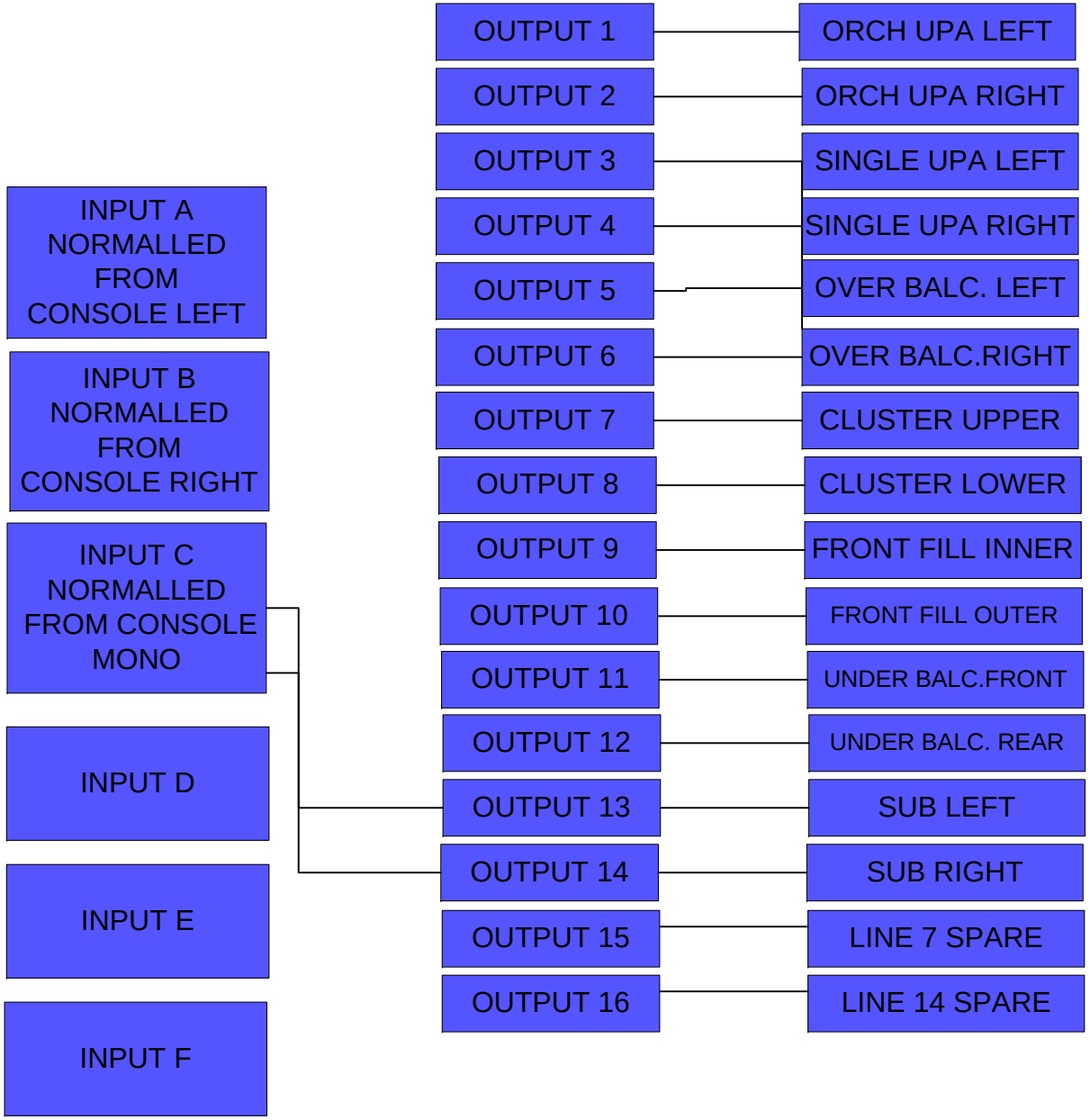

DRIVERACK
480-MASTER

COMPANY: VCT CREATOR: JG AUDIO

TITLE: ORPHEUM THEATRE: PROGRAM AND HARD OF HEARING SYSTEM FLOW CHART

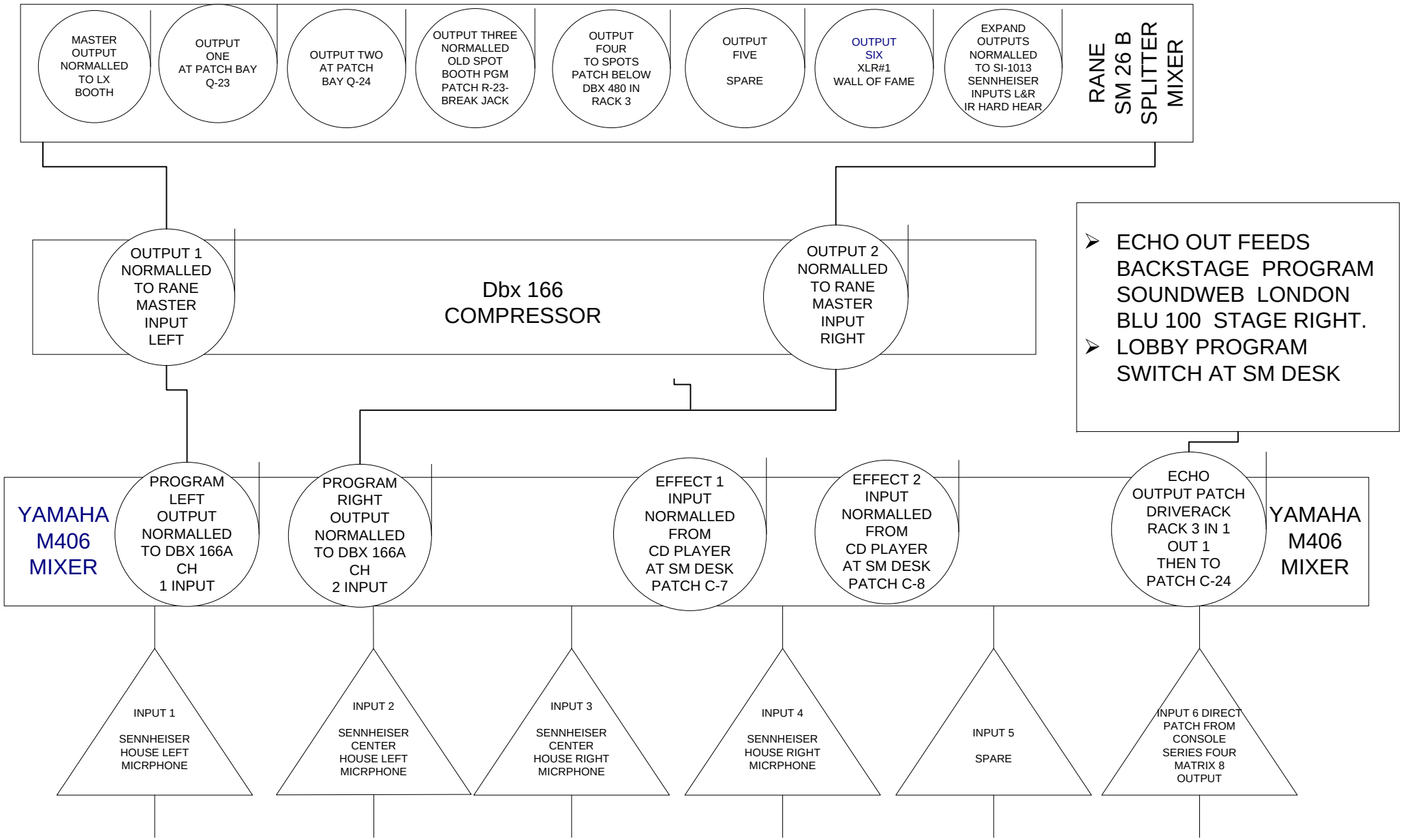

INPUT # 1 FED FROM ECHO +4 OUTPUT OF YAMAHA MIXER PATCH ROW Q- 9

OUTPUT # 1 FEEDS BACKSTAGE AND LOBBY PATCH ROW C-24 SWITCH AT SM DESK CONTROLS PROGRAM TO LOBBY.

PROGRAM SOUND
INPUT AND OUTPUTS 1 & 2

480 INPUTS
480 OUTPUTS
ON XLR PATCH

INPUT # 2 FED FROM RANE DA OUTPUT # 4 PATCH ROW Q- 23

OUTPUT #2-FEEDS SPOT BOOTH PATCH ROW R-21

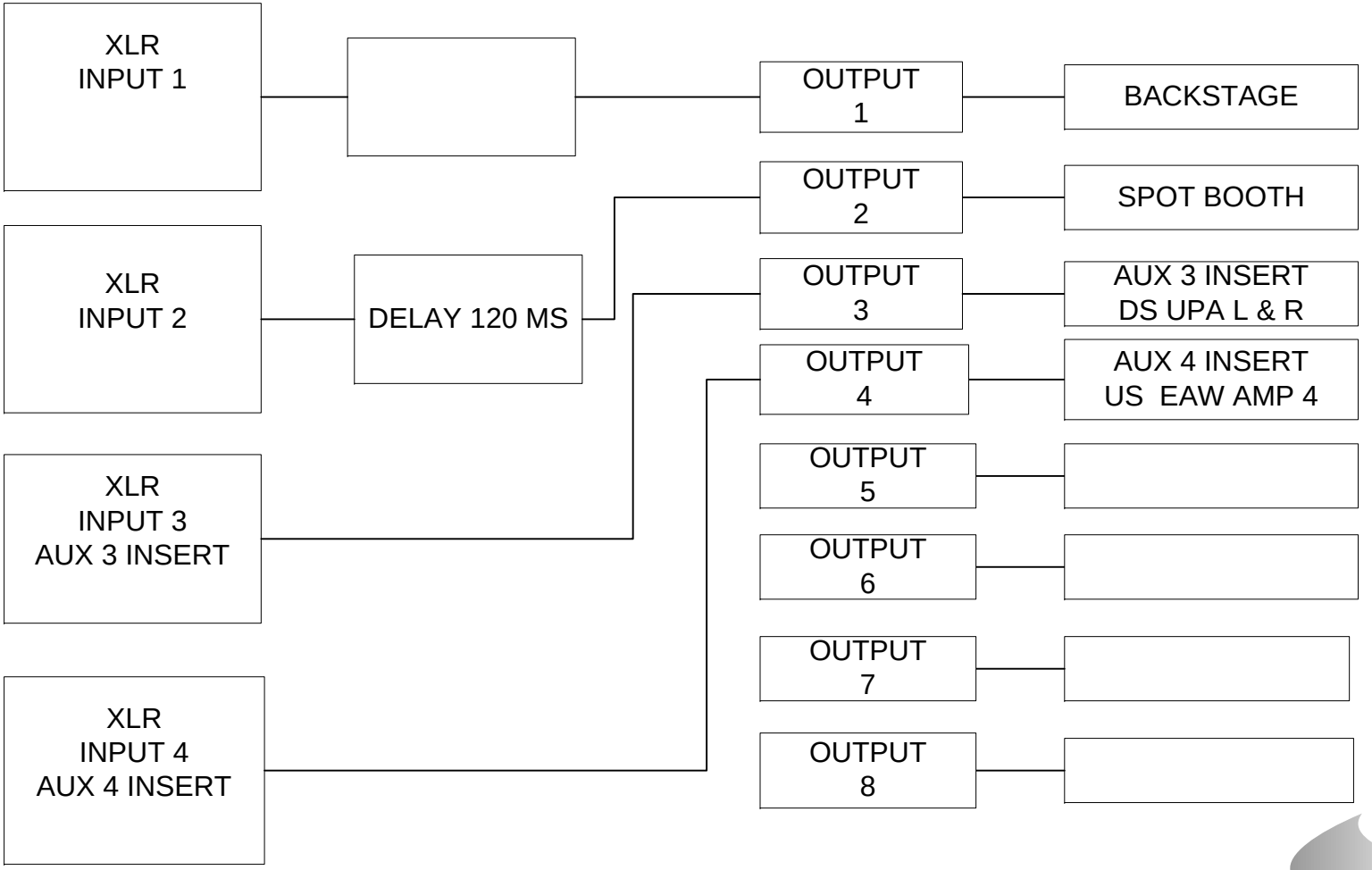

DBX 480
DRIVERACK IN RACK 3

ORPHEUM THEATRE PROGRAM SOUND RUNS THROUGH YAMAHA MIXER IN RACK 2: SEE ORPHEUM FLOW CHART DRAWING

1. PROGRAM SOUND IS DERIVED FROM THE 4 BALCONY RAIL MICROPHONES PLUS THE DRY SIGNAL FED FROM THE CONSOLE.
THE MICROPHONE LEVEL IS MARKED FOR SYMPHONY TYPE SHOWS AND SHOULD BE REDUCED OR COMPLETELY SUBTRACTED FOR LOUDER SHOWS.

2. BACKSTAGE AND LOBBY (PATCH ROW C # 24) ARE FED FROM YAMAHA MIXER (PATCH ROW Q # 9) ECHO+4 OUTPUT. THIS IS ROUTED THROUGH DBX 480 IN RACK 3- INPUT # 1 OUTPUT # 1.

3. SPOTS (PATCH R # 21) ARE FED FROM RANE OUTPUT # 4 (PATCH ROW Q # 23). THIS IS ROUTED THROUGH DBX 480 IN RACK 3- INPUT # 2 OUTPUT # 2.

GALILEO LINK

http://www.meyersound.com/products/processor_drive_systems/galileo/616/

DBX DRIVERACK LINK

http://www.dbxpro.com/en-US/software

ORPHEUM LINK

http://vancouver.ca/parks-recreation-culture/the-orpheum.aspx

ORPHEUM 360 LINK

http://former.vancouver.ca/commsvcs/cultural/theatres/orpheum/index.htm