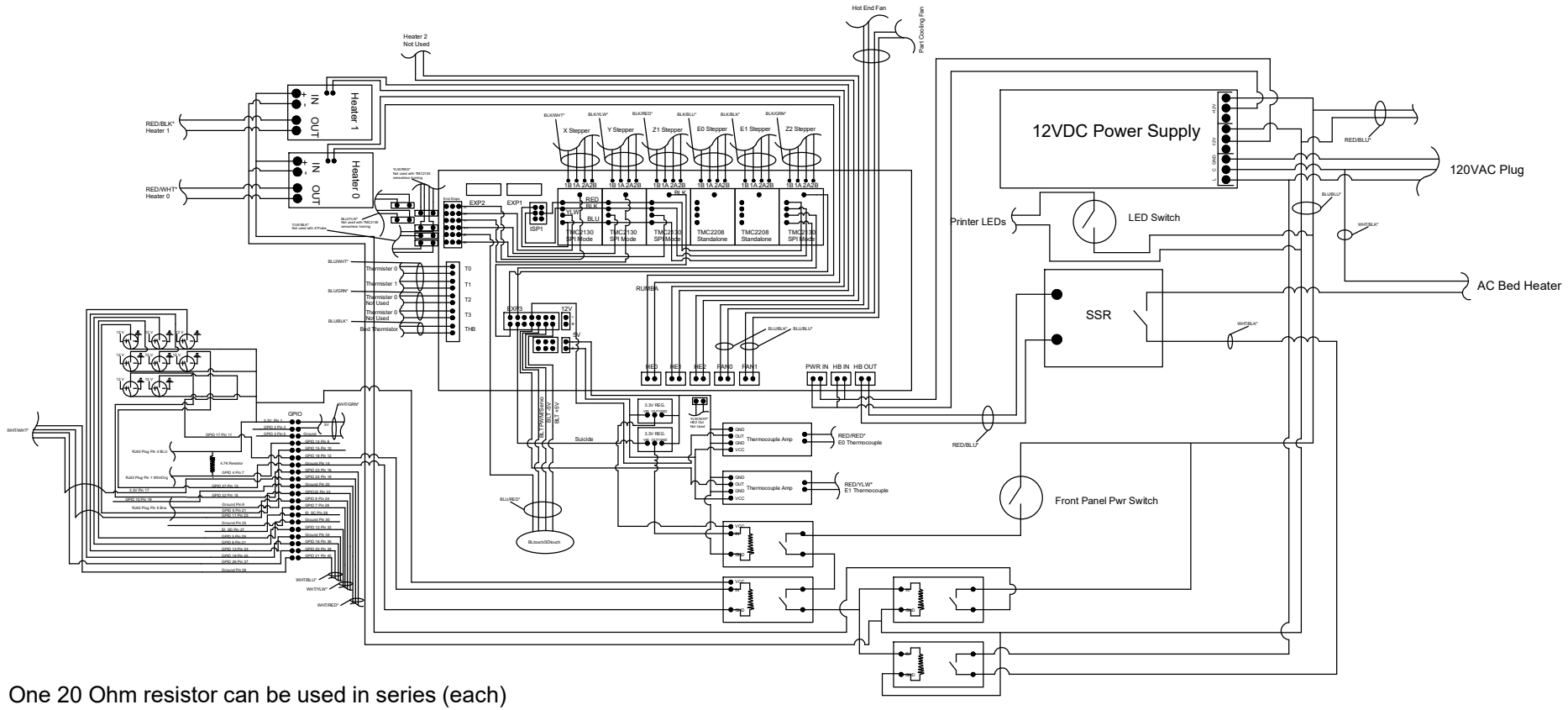

One 20 Ohm resistor can be used in series (each)
for both VCC and input for suicide relay inputs.
* = Change Rumba driver com to Hardware Flow Control then reset board.
* = See cable chart for cable color assignments and use