Enhancing Real-Time Super Resolution with Partial Convolution and Efficient Variance Attention

Zhou Zhou
East China Normal University
Shanghai, China
zhouzhou@stu.ecnu.edu.cn

Jiahao Chao
East China Normal University
Shanghai, China
jhchao502@stu.ecnu.edu.cn

Jiali Gong
East China Normal University
Shanghai, China
gongjl@stu.ecnu.edu.cn

Hongfan Gao
East China Normal University
Shanghai, China
hfgao@stu.ecnu.edu.cn

Zhenbing Zeng
Shanghai University of Finance and Economics Zhejiang College
Jinhua, China
zbzeng@shu.edu.cn

Zhengfeng Yang *
East China Normal University
Shanghai, China
zfyang@sei.ecnu.edu.cn

ABSTRACT

With the increasing availability of devices that support ultra-high-definition (UHD) images, Single Image Super Resolution (SISR) has emerged as a crucial problem in the field of computer vision. In recent years, CNN-based super resolution approaches have made significant advances, producing high-quality upscaled images. However, these methods can be computationally and memory intensive, making them impractical for real-time applications such as upscaling to UHD images. The performance and reconstruction quality may suffer due to the complexity and diversity of larger image content. Therefore, there is a need to develop efficient super resolution approaches that can meet the demands of processing high-resolution images. In this paper, we propose a simple network named PCEVAnet by constructing the PCEVA block, which leverages **P**artial **C**onvolution and **E**fficient **V**ariance **A**ttention. Partial Convolution is employed to streamline the feature extraction process by minimizing memory access. And **E**fficient **V**ariance **A**ttention (EVA) captures the high-frequency information and long-range dependency via the variance and max pooling. We conduct extensive experiments to demonstrate that our model achieves a better trade-off between performance and actual running time than previous methods.

CCS CONCEPTS

• **Computing methodologies** → **Reconstruction**.

KEYWORDS

image super resolution; partial convolution; efficient variance attention

*Corresponding author

Permission to make digital or hard copies of all or part of this work for personal or classroom use is granted without fee provided that copies are not made or distributed for profit or commercial advantage and that copies bear this notice and the full citation on the first page. Copyrights for components of this work owned by others than the author(s) must be honored. Abstracting with credit is permitted. To copy otherwise, or republish, to post on servers or to redistribute to lists, requires prior specific permission and/or a fee. Request permissions from permissions@acm.org.
MM '23, October 29-November 3, 2023, Ottawa, ON, Canada
© 2023 Copyright held by the owner/author(s). Publication rights licensed to ACM
ACM ISBN 979-8-4007-0108-5/23/10…$15.00
https://doi.org/10.1145/3581783.3611729

ACM Reference Format:
Zhou Zhou, Jiahao Chao, Jiali Gong, Hongfan Gao, Zhenbing Zeng, and Zhengfeng Yang . 2023. Enhancing Real-Time Super Resolution with Partial Convolution and Efficient Variance Attention. In *Proceedings of the 31st ACM International Conference on Multimedia (MM '23), October 29-November 3, 2023, Ottawa, ON, Canada.* ACM, New York, NY, USA, 10 pages. https://doi.org/10.1145/3581783.3611729

1 INTRODUCTION

Image super resolution (SR) is the task of reconstructing high-resolution images (HR) from low-resolution images (LR). With the proliferation of digital images produced by generative AI, games and photography, SR has found massive applications in real-time upscaling of contents up to ultra-high-definition (UHD) resolution. This has been made possible by the increasing availability of mobile and wearable devices that support 4K and 8K images, as well as the development of GPUs. Over the years, numerous deep-learning methods have been proposed [7, 11, 25, 26, 46, 50, 51] which have achieved good fidelity and perceptual quality. However, these methods are not fast and accurate enough when it comes to real-time UHD super resolution, which is an important requirement for many practical applications.

Real-time UHD super resolution poses significant challenges, even for widely-used commercial GPUs such as the NVIDIA GeForce RTX 3090, as evidenced by the difficulties encountered in achieving a smooth 30-60 frames per second output. Firstly, as the image size increases, the computation required to process the image grows proportionally. Also, the frequent memory access required when processing larger images further impedes the efficiency of the process. Secondly, larger images offer a wealth of information, but making full use of this rich content presents a significant challenge. Especially, long-range dependencies [47] have been shown to play a role in overall performance, but fully leveraging them in larger images is not a trivial task.

To address the massive computation and memory burden of convolution neural networks, researchers have suggested exploiting the redundancy among channels. Several efficient convolutional methods, such as depthwise convolution [8], pointwise convolution [18] and group convolution [9], have been developed to take advantage of channel redundancy and have been utilized [1, 24, 35, 38] in super resolution tasks to achieve improved efficiency. These methods explicitly reduce the number of parameters and **fl**oating-point

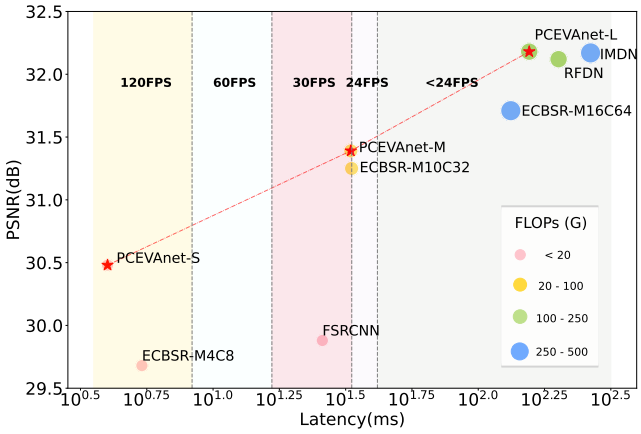

Figure 1: PSNR Latency trade-off for different Efficient Super Resolution approaches. The latency is tested on RTX 3090 with 24GB memory and upsampling from 1920×1080 **to** 3840×2160 **using FP16. PSNR is measured on the Urban100 dataset.**

operations (FLOPs). However, in practice, reduced parameters and FLOPs do not necessarily result in lower latency, especially when dealing with large images. As a consequence, the speed-up may result in a performance loss that outweighs the benefits. Several approaches [20, 30] adopts a channel splitting strategy where features are divided into two parts, where one is kept while the other is further processed. The effectiveness of the channel splitting strategy is evident. Still, its efficacy can be improved via efficient convolutions to reduce the computation.

To make full use of the rich content and long-range dependencies, one way is to enable a larger reception field for convolutions. Recent networks [42, 44] usually employ a reception field up to the entire image, but this can lead to significant computational overheads that limit their efficacy. The contrast-aware channel attention layer [20] and the enhanced spatial attention layer [29] both achieve a better balance between enlarging the receptive field and optimizing computational efficiency. Nevertheless, it is possible to enhance the attention module and further enlarge the reception field to explore a new Pareto frontier between performance and efficiency.

To address the above issues, we propose the PCEVA block that utilizes Partial Convolution and Efficient Variant Attention. We adopt the information multi-distillation [20] approach that extracts hierarchical features step-by-step and replaces the channel convolution and the following channel splitting operation with the partial convolution. The partial convolution applies filters on a portion of the channels while leaving the remainder untouched. This technique, combined with the multi-distillation approach, allows for granular feature extraction and effective utilization of feature map redundancy, leading to improved performance and efficiency. By utilizing partial convolution, channel splitting and concatenation operations during inference are eliminated, contributing to a simpler and more streamlined inference model. In addition, we propose efficient variant attention that combines dimension reduction techniques with local variance to effectively restore high-frequency components which are crucial for high-quality image restorations. The dimensional reduction is applied to both the channel and spatial dimensions to reduce the computational complexity of the model, while local variance enhances the fine details and textures necessary for high-quality image restorations. Moreover, several additional techniques are employed. Pixel unshuffle operation is employed to downsample the images, enabling most of the computation to be performed at a low dimensional space. Meanwhile, reparameterization is performed for the vanilla convolution and the partial convolution to further improve reconstruction quality. As is demonstrated in Fig. 1, our model achieves the best trade-off among different efficient super resolution approaches.

The contribution of this paper can be summarized as follows:

(1) We thoroughly examine the advantages of using partial convolution as a means of extracting hierarchical features from images. It helps streamline the inference model and eliminate the need for splitting and concatenation operations.
(2) We propose a PCEVA block that leverages partial convolution and efficient variant attention where variant attention places greater emphasis on high frequency components of the image, contributing to more effective preservation and restoration of the important details.
(3) Extensive experiments demonstrate that our model achieves a better balance between reconstruction accuracy and inference speed. The results show that our model outperforms state-of-the-art methods by up to **0.17dB** in reconstruction accuracy while achieving **25%** in efficiency.

2 RELATED WORK

Efficient SR Design. Efficient super resolution (SR) design aims to reduce the complexity and latency of SR networks. A substantial amount of approaches have been recommended to improve the efficiency of deep neural networks for image SR while preserving the SR performance. CARN [1] applies group convolutions to the efficient SR task to reduce the number of FLOPs. IMDN [20] employs a progressive refinement module to improve the information extraction ability. Various techniques are explored to further boost efficiency. DHP [23] employs model pruning and MemSR [43] uses knowledge distillation. Several researchers [4, 5, 10, 13, 40, 49] also accelerate the inference via reparameterization. It is worth noticing that a plain network at inference has lower latency and is more friendly to edge devices. At the inference stage, these approaches equivalently transform a complicated block consisting of several branches and residuals into a plain counterpart. In addition, GhostSR [35] and AdderSR [37] replace the "expensive" operators with "cheaper" ones for a better trade-off between reconstruction performance and latency.

Filter Decomposition. Several studies attempt to reduce the computation cost through filter decomposition, which aims to break down a large filter into a combination of smaller ones with the same receptive field. BSRN[24] uses the Blueprint Separable Residual convolution to take the place of the vanilla convolution, significantly reducing the model complexity. Depthwise convolution is used in ESA block[29] to reduce the number of parameters and Flops, but the latency is still high. For advanced optimization, group convolutions are used in CARN [1]. GhostNets [16, 35] combines the lightweight residual blocks with variants of group convolution. Though group

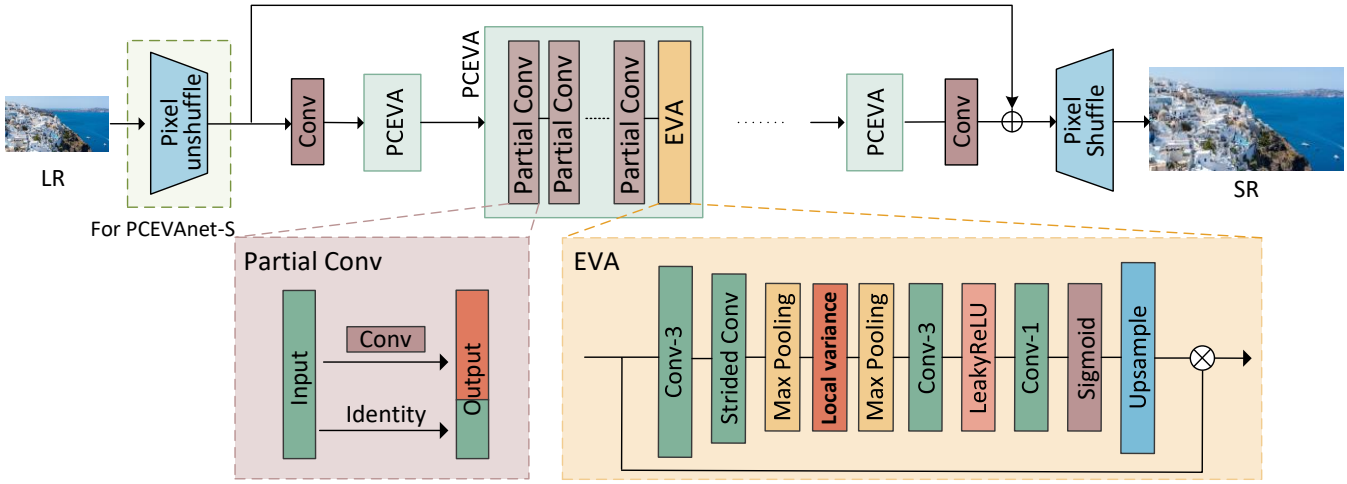

Figure 2: Network architecture for Partial Convolution and Variance Attention (PCEVA) Network. The wisteria box represents the structure of partial convolution and the orange box represents the structure of Efficient Variance Attention (EVA).

convolution along with its variants has been adopted in several efficient SR architectures, they are not well optimized for commercial GPUs and edge devices, thus still require large memory access overhead and result in high latency. To address this, we exploit partial convolution instead to reduce the computational redundancy and memory access simultaneously. The partial convolution is first proposed to address the image inpainting [27] and is recently used for a faster neural network [6]. To extract features hierarchically in super resolution networks, we further propose a PCEVA block that adapts the partial convolution with lower latency.

Attention Mechanism. The aim of the attention mechanism is to adjust the network's focus towards significant features while suppressing insignificant ones. Various attention mechanisms have been employed for super resolution, including channel-wise, spatial and global cross-layer attention mechanisms. To take the interdependence of feature representations into consideration, Hu *et al.* [17] propose the "squeeze-and-excitatio" block, which explicitly models channel interdependence using global average pooling and dense layers. Zhang *et al.* [50] further incorporate channel attention into their RCAN model, which significantly improves representation ability and SR performance. Dai *et al.* [31] propose a channel attention module that rescales channel-wise features using second-order feature statistics to extract more informative and discriminative representations. Zhang *et al.* [48] explores the global cross-layer attention to fully utilize information in previous layers. However, these attention blocks are inefficient with high demand for computation and memory consumption. With regard to spatial attention, ESA [29] reduces the computation by rapidly downsampling and performing convolution at a low dimension. To further boost efficiency, we use variant attention instead of several vanilla convolutions to emphasize the high-frequency components.

3 METHODOLOGY

In this section, we give an overview of the network architecture and then delve into the details of our proposed **P**artial **C**onvolution and **E**fficient **V**ariance **A**ttention (PCEVA). Additionally, we meticulously examine the benefits of stacking partial convolution for hierarchical feature extraction and then utilize partial convolution to streamline the entire process, improving the model's inference speed. We also employ the local variance of each pixel to capture high-frequency components of the images for better reconstruction.

The framework for our model is symmetrically designed and concise. As shown in Fig. 2, given an input LR image I_{LR} and its corresponding target Ground Truth image I_{GT}, our model H generates the super-resolved image I_{SR} as

$$I_{SR} = H(I_{LR}), \tag{1}$$

Concretely, the framework consists of three modules including the downsampling module, feature extraction module and feature reconstruction module. First, to achieve lower latency and a larger reception field, pixel unshuffle downsampling is employed prior to the feature extraction modules. The pixel unshuffle divides a feature into r^2 sub-features and subsequently reduces the feature map size by a factor of r^2. The downsampling process improves the inference latency by reducing the computational burden of processing UHD images. Next, several PCEVA blocks are stacked to extract the relevant features from the input image. Finally, the reconstruction module produces the SR image by utilizing a 3×3 vanilla convolution followed by a Pixel Shuffle [36] operation.

Remark 1. *The integration of pixel unshuffle primarily aims to strike a better balance between speed and accuracy. Specifically, for small models, the speed improvement offered by pixel unshuffle outweighs the degradation in accuracy. However, for models that require high precision, the reduction in accuracy resulting from pixel unshuffle downsampling is not favorable. Therefore, we incorporate pixel unshuffle into a relatively small model* (i.e., *our PCEVAnet-S) for a better performance-efficiency trade-off.*

Our model is optimized with the mean absolute error (MAE) loss function, expressed as

$$\mathcal{L}(\theta) = \|I_{GT} - H(I_{LR})\|_1, \tag{2}$$

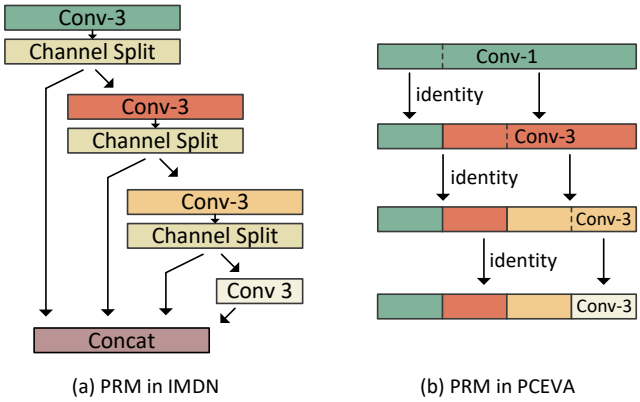

Figure 3: Comparison of progressive refinement module (PRM) in IMDB and PCEVA.

where H denotes the function of our proposed network, θ represents the learnable parameters of our model and $\|.\|_1$ denotes the l_1 norm.

3.1 Partial Convolution

Rethinking Progressive Refinement Module (PRM) in IMDN. Channel splitting is a widely adopted strategy for efficient super resolution. It separates part of the channels from the main network to extract complementary features. The feature is then fused back into the main network to improve the overall performance. As the winner of the AIM 2019 constrained image SR challenge, the Information Multi-distillation Network (IMDN) improves channel splitting by applying it at a more granular level.

One of the key parts of IMDN is the progressive refinement module (PRM), which employs channel splitting operations on preceding features to produce refined features and coarse features. Specifically, the PRM refines the feature maps through a multi-stage process. First, the input feature maps are split into two channels, each containing a portion of the original feature information. Then, the two channels are then processed independently, allowing for more efficient computations. Given the input feature F_{in}, the process in the IMDB block can be described as

$$\begin{cases} \left(F_{r_1}, F_{c_1}\right) = \text{Split}_1\left(\text{CL}_1\left(F_{in}\right)\right), \\ \left(F_{r_2}, F_{c_2}\right) = \text{Split}_2\left(\text{CL}_2\left(F_{c_1}\right)\right), \\ \left(F_{r_3}, F_{c_3}\right) = \text{Split}_3\left(\text{CL}_3\left(F_{c_2}\right)\right), \\ F_{r_4} = \text{CL}_4\left(F_{c_3}\right), \\ F_{out} = \text{Concat}(F_{r_1}, F_{r_2}, F_{r_3}, F_{r_4}), \end{cases} \tag{3}$$

where F_{ri}, F_{ci} denote the refined and coarse feature at the i-th stage, CL_i represents Convolution operation followed by LeakyReLU [32], Split_i represents the i-th channel splitting operation and Concat, denotes the concatenation operation along the channel dimension.

While the progressive refinement module in IMDN achieves higher performance with fewer parameters, it comes with large amounts of memory access that impedes latency improvement. In addition, the channel splitting and concatenation operations introduce much computation that is not negligible for real-time super resolution.

Progressive Refinement Module using Partial Convolution. Partial convolution provides a promising way to streamline and simplify the progressive refinement process, which applies convolution operation on the part of the channels while leaving the remaining part untouched. In order to ensure contiguous memory, we select the last consecutive c_p channels as the representatives of the whole feature maps. As illustrated in Fig. 3, instead of repeatedly splitting and concatenating the channels [20, 52], several partial convolutions are applied sequentially with a decreasing portion of channels involved in convolution.

Methods	FLOPs	MAC
Vanilla Conv	hwk^2c^2	$2hwc + k^2c^2$
Group Conv	hwk^2c^2/g	$2hwc + k^2c^2/g$
Depthwise Conv	hwk^2c	$2hwc + k^2c$
Pointwise Conv	hwc^2	$2hwc + c^2$
Partial Conv	$hwk^2c_p^2$	$2hwc_p + k^2c_p^2$

Table 1: Comparision of FLOPs and MAC for different convolutions. B represents FLOPs and c represents the channel and assume the input and output channels are the same. c_p denotes the actual computed channels for partial convolution, k denotes the kernel size, g represents the number of groups.

Compared with other efficient convolution methods, partial convolution is an efficient and memory-saving option for real-time super resolution. While group convolution and depthwise convolution show significant reductions in FLOPs, they still suffer from high latency due to the lack of optimization and the need to compensate for performance drops with increased channels. In contrast, partial convolution provides a more efficient approach that requires much less memory access. This advantage is particularly important for real-time super resolution tasks, where frequent memory access is a bottleneck for latency. As shown in Table 1, all the efficient convolution methods, such as partial convolution, depthwise convolution, and group convolution, require fewer FLOPs compared to vanilla convolution. However, it should be noted that the first term $2 \times h \times w \times c$ constitutes the majority of the MAC, and thus, all efficient convolutions except for partial convolution do not reduce memory access for $2 \times h \times w \times c$. By reducing memory access, partial convolution reduces the actual running time.

When stacking n layers of partial convolution, assume the channel c has the same input and output size and the kernel size of the convolution is k, the FLOPs and MAC of PRM in PCEVA are roughly

$$\begin{aligned} FLOPs &= h \times w \times k^2 \times \sum c_p^2, \\ MAC &= 2 \times h \times w \times \sum c_p, \end{aligned} \tag{4}$$

which are significantly lower than PRM in IMDN and stacking vanilla convolutions.

Given the input feature F_{in}, the process of stacking n partial convolutions in one PCEVA Block can be described as

$$\begin{cases} \left(F_{r_1}, F_{c_1}\right) = \text{PartialConv}\left(F_{in}\right), \\ \left(F_{r_2}, F_{c_2}\right) = \text{PartialConv}\left(F_{c_1}\right), \\ \quad\vdots \\ \left(F_{r_l}, F_{c_l}\right) = \text{PartialConv}\left(F_{c_{l-1}}\right), \\ \quad\vdots \\ F_{r_n} = \text{PartialConv}\left(F_{c_{n-1}}\right), \end{cases} \tag{5}$$

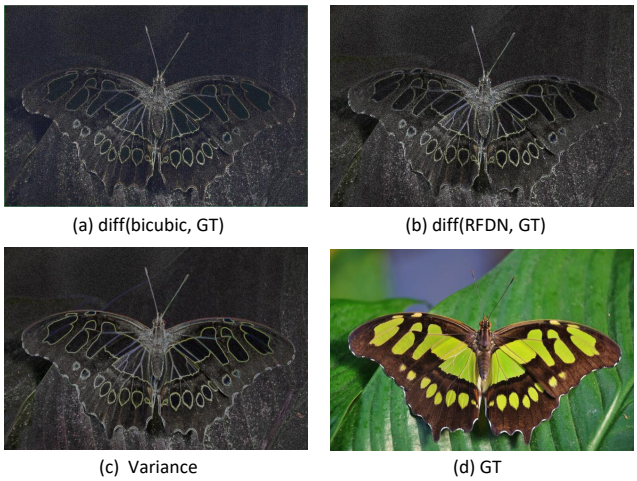

Figure 4: (a) and (b) shows the difference between the upscaled image and Ground Truth (GT). The brighter the pixel, the larger the difference between the GT, indicating poorer performance. (c) shows the variance of GT. The brighter the pixel, the higher the frequency. High frequency components are harder to super-resolved and the parts with high variances are mostly high frequency components.

where F_{r_l}, F_{c_l} denote the refined and coarse feature at the l-th stage. Our PRM in PCEVA significantly simplifies the inferencing process by eliminating the need for splitting and concatenation operations, as progressive refinement can be viewed as an in-place modification of the input. To further enhance the efficiency of our approach, we replace the 3×3 convolution used in IMDN with a more computationally efficient 1×1 convolution at the beginning of PCEVA. It not only reduces computational complexity but also avoids the use of the clone operation introduced by the direct use of partial convolution.

Remark 2. *Using partial convolution directly implies the need for the clone operation, which leads to increased memory access costs that increase the latency. One potential solution to avoid using the clone operation is to employ a convolution at the beginning. Another potential solution is to eliminate the shortcut at the beginning of the partial convolution.*

3.2 Efficient Variance Attention

High frequency information is more challenging to recover[21, 34]. As shown in Fig. 4, the high frequency components are the primary contributors to the region with limited recovery capability. This is due to the fact that high frequency components contain more detailed and complex information than low frequency information and are more sensitive to noise and artifacts. In addition, high frequency information is more prone to loss during feature extraction and reconstruction. Fig. 4 (c) also shows the variance value in the image, not surprisingly, the high frequency components have higher variances. To more effectively reconstruct the high frequency information, we propose efficient variance attention (EVA) to enhance the high frequency information.

For efficiency, the convolution is first squeezed in the channel dimension and the spatial dimension. Concretely, a 1×1 convolution is used for dimension reduction, and convolution with stride = 2 and a max pooling with stride = 3 are together used for spatial dimension reduction. The max pooling is implemented with a kernel size of 7. By squeezing, the computation cost reduces by approximately twelve times, and more inter-channel dependencies and long-range spatial dependencies are exploited.

After the feature extraction, we employ the average pooling to obtain the mean value of the region around point x and then calculate the local variance

$$\sigma^2 = \left(\frac{1}{|\mathcal{R}|} \sum_{x_i \in \mathcal{R}} x_i - x \right)^2, \tag{6}$$

where $\mathcal{R}$ refers to a 7×7 neighborhood centered at x. By incorporating local variance into the attention mechanism, the network focuses more on the area of the image that requires detail enhancement. The local variance is followed by the max pooling layer, which extracts the most salient local variance of the data, resulting in more discriminative features and further expanding the reception field.

Instead of adding the sigmoid function after the upsampling, we perform the sigmoid before the bilinear upsampling to compute in a lower dimension for efficiency. The overall structure of EVA is shown in Fig. 2.

Compared with the enhanced spatial attention (ESA) layer, our Efficient Variance Attention is more efficient to achieve comparable performance. It is further demonstrated in Section 4 that EVA recalibrates the features to emphasize informative representations and improve discriminative learning ability.

Reparameterization. Due to the orthogonality between the reparameterization method and our approach, we extensively utilize the reparameterization module of ECBSR to further enhance the performance of our model. We apply ECBSR [49] reparameterizable block for the vanilla convolution, the partial convolution in the PCEVA block and the efficient variance block. In the training stage, we use a linear combination of multiple branches. In the inference stage, we fold them back to a standard 3x3 convolution.

4 EXPERIMENTS

In this section, we conduct a thorough comparison with state-of-the-art methods on five commonly used benchmark datasets and on the DIV8K dataset to further validate the effectiveness of UHD images. In addition, ablation studies are conducted to analyze the contribution of each component of our proposed method.

4.1 Experiment Setup

Our model is trained on the DIV2K [39] and Flickr2K [26] datasets. DIV2K contains 800 training images, and Flick2K contains 2650 training images. To evaluate the performance of our model, we conducted experiments on 6 benchmark datasets (*i.e.,* Set5 [3], Set14 [45], BSDS100 [33], Urban100 [19], Manga109 [2], DIV8K[15]). Following the previous works, peak signal-to-noise ratio (PSNR) and structural similarity index Measure (SSIM) [41] are used to evaluate the reconstruction quality and are calculated on the Y channel in the YCbCr space.

The patches are cropped with the size 256×256 and augmented by random flipping and rotation. The model is trained by ADAM optimizer [22] with $\beta_1 = 0.9$ and $\beta_2 = 0.999$. We set the initial

Scale	Model	#Params (K)	#FLOPs (G)	Latency (ms)	Set5 PSNR / SSIM	Set14 PSNR / SSIM	B100 PSNR / SSIM	Urban100 PSNR / SSIM	Manga109 PSNR / SSIM
×2	Bicubic	—	—	—	33.66 / 0.9299	30.24 / 0.8688	29.56 / 0.8431	26.88 / 0.8403	30.80 / 0.9339
	SRCNN [11]	69.3	143.4	14.7	36.66 / 0.9542	32.45 / 0.9067	31.36 / 0.8879	29.50 / 0.8946	35.60 / 0.9663
	FSRCNN [12]	24.7	33.9	17.8	37.00 / 0.9558	32.63 / 0.9088	32.63 / 0.9088	29.88 / 0.9020	36.67 / 0.9710
	SESR-M3 [4]	13.0	6.7	2.8	37.21 / 0.9577	32.70 / 0.9100	31.56 / 0.8920	29.92 / 0.9034	36.47 / 0.9717
	ECBSR-M4C16[49]	11.5	5.9	2.7	**37.33** / **0.9593**	32.81 / **0.9129**	31.66 / **0.8961**	30.31 / 0.9091	-
	PCEVAnet-S	147.1	18.3	2.6	37.29 / 0.9581	**32.92** / 0.9119	**31.68** / 0.8935	**30.48** / **0.9106**	**37.42** / **0.9737**
	SESR-XL [4]	113.8	59.0	7.7	37.77 / 0.9601	33.24 / 0.9145	31.99 / 0.8976	31.16 / 0.9184	38.01 / **0.9759**
	ECBSR-M10C32[49]	97.2	50.2	7.3	37.76 / **0.9609**	33.26 / 0.9146	**32.04** / **0.8986**	31.25 / 0.9190	-
	PCEVAnet-M	68.7	27.6	6.6	**37.83** / 0.9603	**33.39** / **0.9157**	32.02 / 0.8979	**31.39** / **0.9202**	**38.18** / 0.9758
	CARN-M [1]	257.0	205.2	70.6	37.53 / 0.9583	33.26 / 0.9141	31.92 / 0.8960	31.23 / 0.9193	-
	CARN [1]	964.2	501.4	53.5	37.88 / 0.9601	33.54 / 0.9173	32.14 / 0.8990	31.96 / 0.9267	-
	ECBSR-M16C64[49]	600.6	310.8	24.1	37.90 / 0.9615	33.34 / 0.9178	32.10 / 0.9018	31.71 / 0.9250	-
	IMDN [20]	873.2	451.4	47.3	38.00 / 0.9605	33.63 / 0.9177	32.19 / 0.8996	32.17 / 0.9283	**38.88** / 0.9774
	RFDN [28]	417.2	205.5	37.4	38.05 / 0.9606	33.68 / 0.9184	32.16 / 0.8994	32.12 / 0.9278	38.88 / 0.9773
	PCEVAnet-L	375.8	182.2	26.9	**38.17** / **0.9618**	**33.79** / **0.9196**	**32.24** / **0.9008**	**32.18** / **0.9291**	38.81 / **0.9775**
×4	Bicubic	—	—	—	28.42 / 0.8104	26.00 / 0.7027	25.96 / 0.6675	23.14 / 0.6577	24.89 / 0.7866
	SRCNN [11]	69.3	573.6	59.4	30.48 / 0.8626	27.50 / 0.7513	26.90 / 0.7101	24.52 / 0.7221	27.58 / 0.8555
	FSRCNN [12]	24.7	118.5	5.8	30.72 / 0.8660	27.61 / 0.7550	26.98 / 0.7150	24.62 / 0.7280	27.90 / 0.8610
	SESR-M3 [4]	27.4	14.18	3.4	30.75 / 0.8714	27.62 / 0.7579	27.00 / 0.7166	24.61 / 0.7304	24.41 / 0.7263
	ECBSR-M4C16[49]	16.8	8.6	3.5	**31.04** / **0.8805**	27.78 / **0.7693**	27.09 / **0.7283**	24.79 / 0.7422	-
	PCEVAnet-S	230.7	29.1	3.3	30.97 / 0.8757	**27.87** / 0.7636	**27.10** / 0.7203	**24.90** / **0.7422**	**28.43** / **0.8751**
	SESR-XL [4]	142.6	73.9	8.7	31.54 / 0.8866	28.12 / 0.7712	27.31 / 0.7277	24.80 / 0.7389	29.65 / 0.8189
	ECBSR-M10C32[49]	107.6	55.6	8.1	**31.66** / **0.8911**	28.15 / **0.7776**	27.34 / **0.7363**	25.41 / **0.7653**	-
	PCEVAnet-M	79.1	33.0	7.4	31.58 / 0.8867	**28.25** / 0.7718	**27.36** / 0.7279	**25.48** / 0.7618	**29.47** / **0.8925**
	CARN-M [1]	294.2	292.4	95.3	31.92 / 0.8903	28.42 / 0.7762	27.44 / 0.7304	25.62 / 0.7694	
	CARN [1]	1111.9	817.9	82.1	32.16 / 0.8943	28.59 / 0.7810	27.58 / 0.7355	26.03 / 0.7830	-
	ECBSR-M16C64[49]	621.4	321.6	24.9	31.92 / 0.8946	28.34 / 0.7817	27.48 / **0.7393**	25.81 / 0.7773	-
	IMDN [20]	893.9	462.2	47.9	32.21 / 0.8948	28.58 / 0.7811	27.56 / 0.7353	26.04 / 0.7838	30.45 / 0.9075
	RFDN [28]	433.4	213.9	37.7	32.24 / 0.8952	28.61 / 0.7819	27.57 / 0.7360	26.11 / 0.7858	**30.58** / **0.9089**
	PCEVAnet-L	401.8	195.6	28.2	**32.27** / **0.8963**	**28.68** / **0.7823**	**27.67** / 0.7383	**26.30** / **0.7879**	30.57 / 0.9078

Table 2: Performance comparison of different SR models on five benchmark datasets. PSNR / SSIM on the Y channel is reported on each dataset. Inference Latency is tested on RTX 3090 (24GB) using FP16 precision. The FLOPs and inference latency are measured under the setting of generating 2560×1440 image.

learning rate to 5×10^{-4} and scheduled it to decrease by half at 800K and 1400K iterations. To fasten the training and inference time while maintaining the same precision, we used mixed precision to train the model. In accordance with previous works, our model is trained for 1500K iteration, using L_1 loss. The model is implemented based on PyTorch 1.12.1 and it is trained and tested on RTX 3090.

4.2 Comparision with Previous Works

We compare our model with representative real-time SR models, including Bicubic, SRCNN [11], IMDN [20], RFDN [28], FSRCNN [12], ECBSR [49], CARN [1], SESR [4]. We train three different sizes of our model, denoted as PCEVAnet-S, PCEVAnet-M and PCEVAnet-L for different computational use cases, with PCEVA blocks 1, 3, 4 and channels 64, 32, 80 respectively. The use of pixel unshuffle is a consideration for image super resolution, as it is a downsampling operation that can result in information loss and degrade the model's performance. However, for smaller models, the benefits of using pixel unshuffle to accelerate the speed outweigh its drawbacks in terms of accuracy degradation. By employing this technique, we can significantly increase the model's speed and enable the construction of deeper and larger network architectures, leading to better trade-offs for smaller models. In our experiments, we employed the pixel unshuffle for our PCEVA-S model, which achieved promising results. However, it was not used in models

Model	#Params (K)	#FLOPs (G)	Latency (ms)	DIV8K PSNR / SSIM
Bicubic	—	—	—	33.31 / 0.8621
FSRCNN [12]	24.7	474.1	22.9	33.65 / 0.8740
PCEVAnet-S	230.8	116.5	12.1	34.53 / 0.8857
PCEVAnet-M	79.1	132.1	29.6	34.71 / 0.8885
IMDN [20]	893.9	1848.8	179.8	34.96 / 0.8939
RFDN [28]	433.4	855.4	146.0	35.13 / 0.8965
PCEVAnet-L	401.8	782.4	116.5	35.03 / 0.8936

Table 3: Qualitative comparison of different SR models on DIV8K [15]. PSNR / SSIM is measured on the Y channel. The Inference Latency is measured for upsampling 1920×1080 to the resolution of 7680×4320 with FP16 precision.

of other sizes. Aside from comparing the PSNR/SSIM indexes, we provide additional metrics including the number of parameters, FLOPs, and latency to ensure a more comprehensive comparison. The FLOPs and inference latency are measured under the setting of generating a 2560×1440 image.

Quantitative Results. Quantitative comparisons are conducted by dividing them into three groups based on the inference latency. As demonstrated in Tab.2, our proposed model achieves the best performance-efficiency trade-off among all the approaches. Especially, for middle-sized models with 10 -100K parameters, our PCEVAnet-M model performs the best in both latency (6.6 ms vs.

Figure 5: Comparison of SR models on B100 dataset. Images shown: 148026 (× 4) and 58060 (× 2). PSNR and SSIM are used for evaluation.

7.3ms) and PSNR/SSIM index (37.83dB vs. 37.77dB) on all datasets. For models with 100 -1000K parameters, our PCEVAnet-L model achieves a significant improvement of 28% on inference latency (26.9 ms vs. 37.4 ms) and 0.03dB on PSNR compared with the state-of-the-art methods. Notably, it is further demonstrated that lower parameters and FLOPs do not necessarily lead to lower latency. For instance, ECBSR-M16C64 has higher FLOPs than IMDN while having lower latency. Due to the presence of pixel unshuffle, PCEVAnet-S has much more parameters and FLOPs but achieves faster speed compared to the baseline SESR or ECBSR.

Experiments are also conducted on DIV8K [15] dataset to validate the effectiveness and feasibility of our model for ultra-high-definition images. The experiments are conducted on the × 4 tasks because when applying the methods such as the CARN to the task of upscale factor 2, the out-of-the-memory issue occurs for RTX 3090 with 24GB memory. As shown in Tab. 3, our PCEVAnet-S achieves both higher PSNR/SSIM and lower latency than FSRCNN at the same time. When it comes to larger nets with a latency of more than 100ms, our PCEVAnet-L also achieves competitive results at 20.2% faster than RFDN.

Qualitative Results. Fig. 5 shows the qualitative comparision results on B100 datasets for ×2 and ×4 task. We can see that the texture of the wood has incorrect direction for IMDN [20] and CARN [1] while our PCEVAnet-S and PCEVAnet-M roughly generate the correct patterns. PCEVAnet-L generates the wood with the correct direction and is most similar to the ground truth image. For image 58060 from B100, our model generates the least amount of distortion and blurring of the fabric.

	w/o PC	PC w/ clone	PC w/o clone
PCEVAnet-S	2.6	2.8	2.6
PCEVAnet-M	6.8	6.8	6.6
PCEVAnet-L	27.1	29.2	26.9

Table 4: Latency (ms) for our model without Partial Convolution, Partial Convolution without the clone operation and Partial Convolution without the clone operation. It is tested on RTX 3090 using FP16 precision from 1280 × 720 to 2560 × 1440.

4.3 Ablation Studies

We perform the ablation experiments for our partial convolution and the efficient variance attention on the ×2 models and report latency on the RTX 3090 GPU with FP16 precision and the PSNR / SSIM values on the Y channel.

Partial Convolution. We conducted ablation experiments to investigate the acceleration of partial convolution for PCEVAnet-S, PCEVAnet-M and PCEVAnet-L. As for the model without partial convolution, the splitting and concatenating method was used for feature extraction. We can draw the conclusion that the partial convolution with the clone operator leads to a much higher latency than the previous splitting and concatenation way and abandoning the clone operator further reduces the inference latency. As

Model	#Params	#FLOPs	Latency
PRM	383.7	143.4	16.4
PRM + PConv	383.7	143.4	15.3
PRM + ESA	383.7	149.7	29.1
PRM + EVA	383.7	162.8	27.7
PRM + PConv + ESA	383.7	149.7	28.3
PRM + PConv + EVA	383.8	162.8	26.9
PRM + PConv + ESA + REP	383.7	149.7	28.3

Table 5: Ablation studies for different components. Inference Latency is tested on RTX 3090 (24GB) using FP16 precision.

	Set 5		U100	
Model	PSNR	SSIM	PSNR	SSIM
PRM	37.06	0.957	29.97	0.9038
PRM + PConv	37.06	0.957	29.97	0.9038
PRM + ESA	36.94	0.9565	29.85	0.9025
PRM + EVA	37.29	0.9581	30.48	0.9106
PRM + PConv + ESA	36.94	0.9565	29.85	0.9025
PRM + PConv + EVA	37.29	0.9581	30.48	0.9106
PRM + PConv + ESA + REP	37.32	0.9591	30.31	0.9095

Table 6: Ablation studies for different components. PSNR and SSIM are used for evlauation.

shown in Tab. 4, applying partial convolution directly leads to a slight increase in the inference latency (*e.g.,* 27.1ms vs. 29.2ms in PCEVAnet-L) and the inference latency has a significant decrease if the clone operator is abandoned in all three cases (*e.g.,* 26.9ms vs. 29.2ms in PCEVAnet-L). As mentioned in Remark 2, one key reason is that the clone operation introduces many memory access that slows the process. Thus, removing the clone operation from the partial convolution optimizes the latency of the model.

Efficient Variance Attention. We conducted ablation experiments for efficient variance attention (EVA) evaluated on the Set5 and Urban100 datasets. It can be seen from Tab. **??**, with EVA our model achieves the best results in all the metrics. Our model enjoys the highest PSNR and SSIM and outperforms the second place by up to 0.51dB and 0.0068 respectively. Meanwhile, our model has the lowest MACs and latency, indicating its lowest computation cost and highest real-time performance. In addition, we visualize the feature map after the attention block. As can be seen from Fig. 6, our feature maps are significantly clearer and have higher color contrast, better emphasizing the high-frequency information. For example, the edges of the wings of the butterfly can be easily recognized in our feature map, but are blurry in feature maps with ESA and without attention due to low color contrast.

To better illustrate the ability to capture long-range dependencies, we use the local attribution map (LAM) [14] which is capable of identifying whether the input pixels have a strong influence on the SR results. As shown in Fig. 7, our model has a significantly wider range of input pixels that contributes to the target pixel, which means further pixels contribute to the super resolution process and our model is more capable of modeling long-range dependencies. Besides, the diffusion index (DI), which is the inverse of the Gini coefficient, is also utilized to measure the ability to model long-range dependencies, and a larger diffusion index indicates the SR model pays attention to more areas. As shown in Fig. 7, our PCEVAnet-L model outperforms the IMDN and CARN by a large margin for the DI index.

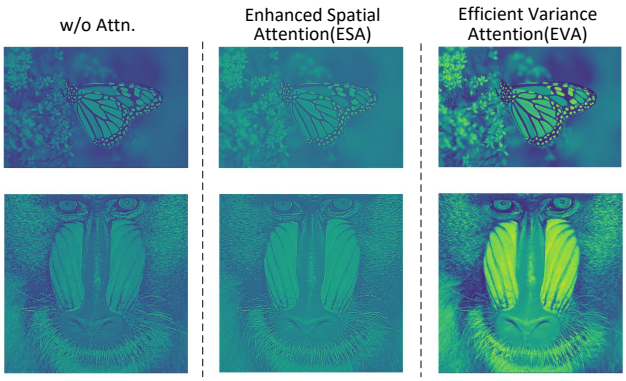

Figure 6: Comparison of feature map after the attention block for the model without attention, with ESA and with our EVA.

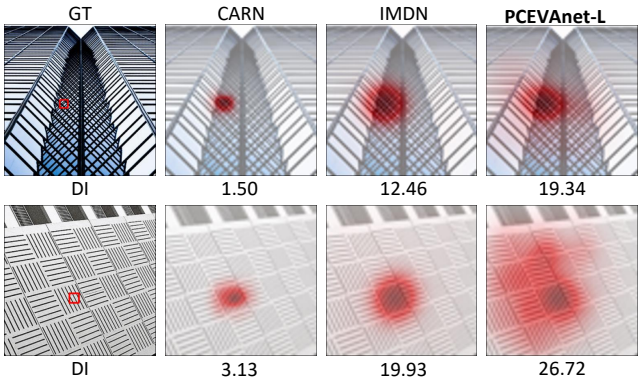

Figure 7: LAM [14] results for comparison. The LAM map indicates the significance of each pixel in the input image w.r.t. the SR of the corresponding patch, marked in red.

5 CONCLUSION

In this paper, we have proposed the PCEVA block that employs partial convolution and efficient variance attention that reduces the frequent memory access and considers the ample content. Concretely, the partial convolution is stacked to streamline the feature extraction process while EVA pays more attention to the high-frequency components via explicitly computing the variance. Delicate designs such as the avoidance of the clone operation further unleash the potential of partial convolution, improving the reconstruction performance. The experimental results demonstrate that our model achieves superior inference speed and reconstruction quality compared to previous lightweight SR methods for real-time tasks. Our experimental results demonstrate that our proposed model achieves superior reconstruction accuracy compared to state-of-the-art methods, with an improvement of up to 0.17 dB while being 25% faster than previous state-of-the-art approaches.

ACKNOWLEDGMENTS

This work was supported in part by "Digital Silk Road" Shanghai International Joint Lab of Trustworthy Intelligent Software (Grant No. 22510750100), and Shanghai Trusted Industry Internet Software Collaborative Innovation Center.

REFERENCES

[1] Namhyuk Ahn, Byungkon Kang, and Kyung-Ah Sohn. 2018. Fast, Accurate, and Lightweight Super-Resolution with Cascading Residual Network. In *Computer Vision - ECCV 2018 - 15th European Conference, Munich, Germany, September 8-14, 2018, Proceedings, Part X (Lecture Notes in Computer Science, Vol. 11214)*, Vittorio Ferrari, Martial Hebert, Cristian Sminchisescu, and Yair Weiss (Eds.). Springer, 256–272. https://doi.org/10.1007/978-3-030-01249-6_16

[2] Kiyoharu Aizawa, Azuma Fujimoto, Atsushi Otsubo, Toru Ogawa, Yusuke Matsui, Koki Tsubota, and Hikaru Ikuta. 2020. Building a Manga Dataset "Manga109" With Annotations for Multimedia Applications. *IEEE Multim.* 27, 2 (2020), 8–18. https://doi.org/10.1109/MMUL.2020.2987895

[3] Marco Bevilacqua, Aline Roumy, Christine Guillemot, and Marie-Line Alberi-Morel. 2012. Low-Complexity Single-Image Super-Resolution based on Nonnegative Neighbor Embedding. In *British Machine Vision Conference, BMVC 2012, Surrey, UK, September 3-7, 2012*, Richard Bowden, John P. Collomosse, and Krystian Mikolajczyk (Eds.). BMVA Press, 1–10. https://doi.org/10.5244/C.26.135

[4] Kartikeya Bhardwaj, Milos Milosavljevic, Liam O'Neil, Dibakar Gope, Ramon Matas Navarro, Alex Chalfin, Naveen Suda, Lingchuan Meng, and Danny Loh. 2022. Collapsible Linear Blocks for Super-Efficient Super Resolution. In *Proceedings of Machine Learning and Systems 2022, MLSys 2022, Santa Clara, CA, USA, August 29 - September 1, 2022*, Diana Marculescu, Yuejie Chi, and Carole-Jean Wu (Eds.). mlsys.org. https://proceedings.mlsys.org/paper/2022/hash/ac627ab1ccbdb62ec96e702f07f6425b-Abstract.html

[5] Jiahao Chao, Zhou Zhou, Hongfan Gao, Jiali Gong, Zhengfeng Yang, Zhenbing Zeng, and Lydia Dehbi. 2023. Equivalent Transformation and Dual Stream Network Construction for Mobile Image Super-Resolution. In *Proceedings of the IEEE/CVF Conference on Computer Vision and Pattern Recognition (CVPR)*. 14102–14111.

[6] Jierun Chen, Shiu-hong Kao, Hao He, Weipeng Zhuo, Song Wen, Chul-Ho Lee, and S-H Gary Chan. 2023. Run, Don't Walk: Chasing Higher FLOPS for Faster Neural Networks. *arXiv preprint arXiv:2303.03667* (2023).

[7] Xiangyu Chen, Xintao Wang, Jiantao Zhou, and Chao Dong. 2022. Activating More Pixels in Image Super-Resolution Transformer. *CoRR* abs/2205.04437 (2022). https://doi.org/10.48550/arXiv.2205.04437 arXiv:2205.04437

[8] François Chollet. 2017. Xception: Deep Learning with Depthwise Separable Convolutions. In *2017 IEEE Conference on Computer Vision and Pattern Recognition, CVPR 2017, Honolulu, HI, USA, July 21-26, 2017*. IEEE Computer Society, 1800–1807. https://doi.org/10.1109/CVPR.2017.195

[9] Taco Cohen and Max Welling. 2016. Group Equivariant Convolutional Networks. In *Proceedings of the 33nd International Conference on Machine Learning, ICML 2016, New York City, NY, USA, June 19-24, 2016 (JMLR Workshop and Conference Proceedings, Vol. 48)*, Maria-Florina Balcan and Kilian Q. Weinberger (Eds.). JMLR.org, 2990–2999. http://proceedings.mlr.press/v48/cohenc16.html

[10] Xiaohan Ding, Xiangyu Zhang, Ningning Ma, Jungong Han, Guiguang Ding, and Jian Sun. 2021. RepVGG: Making VGG-Style ConvNets Great Again. In *IEEE Conference on Computer Vision and Pattern Recognition, CVPR 2021, virtual, June 19-25, 2021*. Computer Vision Foundation / IEEE, 13733–13742. https://doi.org/10.1109/CVPR46437.2021.01352

[11] Chao Dong, Chen Change Loy, Kaiming He, and Xiaoou Tang. 2015. Image Super-Resolution Using Deep Convolutional Networks. *CoRR* abs/1501.00092 (2015). arXiv:1501.00092 http://arxiv.org/abs/1501.00092

[12] Chao Dong, Chen Change Loy, and Xiaoou Tang. 2016. Accelerating the Super-Resolution Convolutional Neural Network. In *Computer Vision - ECCV 2016 - 14th European Conference, Amsterdam, The Netherlands, October 11-14, 2016, Proceedings, Part II (Lecture Notes in Computer Science, Vol. 9906)*, Bastian Leibe, Jiri Matas, Nicu Sebe, and Max Welling (Eds.). Springer, 391–407. https://doi.org/10.1007/978-3-319-46475-6_25

[13] Zongcai Du, Jie Liu, Jie Tang, and Gangshan Wu. 2021. Anchor-Based Plain Net for Mobile Image Super-Resolution. In *IEEE Conference on Computer Vision and Pattern Recognition Workshops, CVPR Workshops 2021, virtual, June 19-25, 2021*. Computer Vision Foundation / IEEE, 2494–2502. https://doi.org/10.1109/CVPRW53098.2021.00283

[14] Jinjin Gu and Chao Dong. 2021. Interpreting Super-Resolution Networks With Local Attribution Maps. In *IEEE Conference on Computer Vision and Pattern Recognition, CVPR 2021, virtual, June 19-25, 2021*. Computer Vision Foundation / IEEE, 9199–9208. https://doi.org/10.1109/CVPR46437.2021.00908

[15] Shuhang Gu, Andreas Lugmayr, Martin Danelljan, Manuel Fritsche, Julien Lamour, and Radu Timofte. 2019. DIV8K: DIVerse 8K Resolution Image Dataset. In *2019 IEEE/CVF International Conference on Computer Vision Workshops, ICCV Workshops 2019, Seoul, Korea (South), October 27-28, 2019*. IEEE, 3512–3516. https://doi.org/10.1109/ICCVW.2019.00435

[16] Kai Han, Yunhe Wang, Qi Tian, Jianyuan Guo, Chunjing Xu, and Chang Xu. 2020. GhostNet: More Features From Cheap Operations. In *2020 IEEE/CVF Conference on Computer Vision and Pattern Recognition, CVPR 2020, Seattle, WA, USA, June 13-19, 2020*. Computer Vision Foundation / IEEE, 1577–1586. https://doi.org/10.1109/CVPR42600.2020.00165

[17] Jie Hu, Li Shen, and Gang Sun. 2018. Squeeze-and-Excitation Networks. In *2018 IEEE Conference on Computer Vision and Pattern Recognition, CVPR 2018, Salt Lake City, UT, USA, June 18-22, 2018*. Computer Vision Foundation / IEEE Computer Society, 7132–7141. https://doi.org/10.1109/CVPR.2018.00745

[18] Binh-Son Hua, Minh-Khoi Tran, and Sai-Kit Yeung. 2018. Pointwise Convolutional Neural Networks. In *2018 IEEE Conference on Computer Vision and Pattern Recognition, CVPR 2018, Salt Lake City, UT, USA, June 18-22, 2018*. Computer Vision Foundation / IEEE Computer Society, 984–993. https://doi.org/10.1109/CVPR.2018.00109

[19] Jia-Bin Huang, Abhishek Singh, and Narendra Ahuja. 2015. Single image super-resolution from transformed self-exemplars. In *IEEE Conference on Computer Vision and Pattern Recognition, CVPR 2015, Boston, MA, USA, June 7-12, 2015*. IEEE Computer Society, 5197–5206. https://doi.org/10.1109/CVPR.2015.7299156

[20] Zheng Hui, Xinbo Gao, Yunchu Yang, and Xiumei Wang. 2019. Lightweight Image Super-Resolution with Information Multi-distillation Network. In *Proceedings of the 27th ACM International Conference on Multimedia, MM 2019, Nice, France, October 21-25, 2019*, Laurent Amsaleg, Benoit Huet, Martha A. Larson, Guillaume Gravier, Hayley Hung, Chong-Wah Ngo, and Wei Tsang Ooi (Eds.). ACM, 2024–2032. https://doi.org/10.1145/3343031.3351084

[21] Jiwon Kim, Jung Kwon Lee, and Kyoung Mu Lee. 2016. Accurate Image Super-Resolution Using Very Deep Convolutional Networks. In *2016 IEEE Conference on Computer Vision and Pattern Recognition, CVPR 2016, Las Vegas, NV, USA, June 27-30, 2016*. IEEE Computer Society, 1646–1654. https://doi.org/10.1109/CVPR.2016.182

[22] Diederik P. Kingma and Jimmy Ba. 2015. Adam: A Method for Stochastic Optimization. In *3rd International Conference on Learning Representations, ICLR 2015, San Diego, CA, USA, May 7-9, 2015, Conference Track Proceedings*, Yoshua Bengio and Yann LeCun (Eds.). http://arxiv.org/abs/1412.6980

[23] Yawei Li, Shuhang Gu, Kai Zhang, Luc Van Gool, and Radu Timofte. 2020. DHP: Differentiable Meta Pruning via HyperNetworks. In *Computer Vision - ECCV 2020 - 16th European Conference, Glasgow, UK, August 23-28, 2020, Proceedings, Part VIII (Lecture Notes in Computer Science, Vol. 12353)*, Andrea Vedaldi, Horst Bischof, Thomas Brox, and Jan-Michael Frahm (Eds.). Springer, 608–624. https://doi.org/10.1007/978-3-030-58598-3_36

[24] Zheyuan Li, Yingqi Liu, Xiangyu Chen, Haoming Cai, Jinjin Gu, Yu Qiao, and Chao Dong. 2022. Blueprint Separable Residual Network for Efficient Image Super-Resolution. In *IEEE/CVF Conference on Computer Vision and Pattern Recognition Workshops, CVPR Workshops 2022, New Orleans, LA, USA, June 19-20, 2022*. IEEE, 832–842. https://doi.org/10.1109/CVPRW56347.2022.00099

[25] Jingyun Liang, Jiezhang Cao, Guolei Sun, Kai Zhang, Luc Van Gool, and Radu Timofte. 2021. SwinIR: Image Restoration Using Swin Transformer. In *IEEE/CVF International Conference on Computer Vision Workshops, ICCVW 2021, Montreal, BC, Canada, October 11-17, 2021*. IEEE, 1833–1844. https://doi.org/10.1109/ICCVW54120.2021.00210

[26] Bee Lim, Sanghyun Son, Heewon Kim, Seungjun Nah, and Kyoung Mu Lee. 2017. Enhanced Deep Residual Networks for Single Image Super-Resolution. In *2017 IEEE Conference on Computer Vision and Pattern Recognition Workshops, CVPR Workshops 2017, Honolulu, HI, USA, July 21-26, 2017*. IEEE Computer Society, 1132–1140. https://doi.org/10.1109/CVPRW.2017.151

[27] Guilin Liu, Fitsum A. Reda, Kevin J. Shih, Ting-Chun Wang, Andrew Tao, and Bryan Catanzaro. 2018. Image Inpainting for Irregular Holes Using Partial Convolutions. In *Computer Vision - ECCV 2018 - 15th European Conference, Munich, Germany, September 8-14, 2018, Proceedings, Part XI (Lecture Notes in Computer Science, Vol. 11215)*, Vittorio Ferrari, Martial Hebert, Cristian Sminchisescu, and Yair Weiss (Eds.). Springer, 89–105. https://doi.org/10.1007/978-3-030-01252-6_6

[28] Jie Liu, Jie Tang, and Gangshan Wu. 2020. Residual Feature Distillation Network for Lightweight Image Super-Resolution. In *Computer Vision - ECCV 2020 Workshops - Glasgow, UK, August 23-28, 2020, Proceedings, Part III (Lecture Notes in Computer Science, Vol. 12537)*, Adrien Bartoli and Andrea Fusiello (Eds.). Springer, 41–55. https://doi.org/10.1007/978-3-030-67070-2_2

[29] Jie Liu, Wenjie Zhang, Yuting Tang, Jie Tang, and Gangshan Wu. 2020. Residual Feature Aggregation Network for Image Super-Resolution. In *2020 IEEE/CVF Conference on Computer Vision and Pattern Recognition, CVPR 2020, Seattle, WA, USA, June 13-19, 2020*. Computer Vision Foundation / IEEE, 2356–2365. https://doi.org/10.1109/CVPR42600.2020.00243

[30] Xin Liu, Yuang Li, Josh Fromm, Yuntao Wang, Ziheng Jiang, Alex Mariakakis, and Shwetak N. Patel. 2021. SplitSR: An End-to-End Approach to Super-Resolution on Mobile Devices. *Proc. ACM Interact. Mob. Wearable Ubiquitous Technol.* 5, 1 (2021), 25:1–25:20. https://doi.org/10.1145/3448104

[31] Jiawen Lyn and Sen Yan. 2020. Non-local Second-Order Attention Network for Single Image Super Resolution. In *Machine Learning and Knowledge Extraction - 4th IFIP TC 5, TC 12, WG 8.4, WG 8.9, WG 12.9 International Cross-Domain Conference, CD-MAKE 2020, Dublin, Ireland, August 25-28, 2020, Proceedings (Lecture Notes in Computer Science, Vol. 12279)*, Andreas Holzinger, Peter Kieseberg, A Min Tjoa, and Edgar R. Weippl (Eds.). Springer, 267–279. https://doi.org/10.1007/978-3-030-57321-8_15

[32] Andrew L Maas, Awni Y Hannun, Andrew Y Ng, et al. 2013. Rectifier nonlinearities improve neural network acoustic models. In *Proc. icml*, Vol. 30. Atlanta, Georgia, USA, 3.

[33] David R. Martin, Charless C. Fowlkes, Doron Tal, and Jitendra Malik. 2001. A Database of Human Segmented Natural Images and its Application to Evaluating Segmentation Algorithms and Measuring Ecological Statistics. In *Proceedings of the Eighth International Conference On Computer Vision (ICCV-01), Vancouver, British Columbia, Canada, July 7-14, 2001 - Volume 2*. IEEE Computer Society, 416–425. https://doi.org/10.1109/ICCV.2001.937655

[34] Kamyar Nazeri, Harrish Thasarathan, and Mehran Ebrahimi. 2019. Edge-Informed Single Image Super-Resolution. In *2019 IEEE/CVF International Conference on Computer Vision Workshops, ICCV Workshops 2019, Seoul, Korea (South), October 27-28, 2019*. IEEE, 3275–3284. https://doi.org/10.1109/ICCVW.2019.00409

[35] Ying Nie, Kai Han, Zhenhua Liu, An Xiao, Yiping Deng, Chunjing Xu, and Yunhe Wang. 2021. GhostSR: Learning Ghost Features for Efficient Image Super-Resolution. *CoRR* abs/2101.08525 (2021). arXiv:2101.08525 https://arxiv.org/abs/2101.08525

[36] Wenzhe Shi, Jose Caballero, Ferenc Huszar, Johannes Totz, Andrew P. Aitken, Rob Bishop, Daniel Rueckert, and Zehan Wang. 2016. Real-Time Single Image and Video Super-Resolution Using an Efficient Sub-Pixel Convolutional Neural Network. In *2016 IEEE Conference on Computer Vision and Pattern Recognition, CVPR 2016, Las Vegas, NV, USA, June 27-30, 2016*. IEEE Computer Society, 1874–1883. https://doi.org/10.1109/CVPR.2016.207

[37] Dehua Song, Yunhe Wang, Hanting Chen, Chang Xu, Chunjing Xu, and Dacheng Tao. 2021. AdderSR: Towards Energy Efficient Image Super-Resolution. In *IEEE Conference on Computer Vision and Pattern Recognition, CVPR 2021, virtual, June 19-25, 2021*. Computer Vision Foundation / IEEE, 15648–15657. https://doi.org/10.1109/CVPR46437.2021.01539

[38] Long Sun, Jinshan Pan, and Jinhui Tang. 2022. ShuffleMixer: An Efficient ConvNet for Image Super-Resolution. *CoRR* abs/2205.15175 (2022). https://doi.org/10.48550/arXiv.2205.15175 arXiv:2205.15175

[39] Radu Timofte, Eirikur Agustsson, Luc Van Gool, Ming-Hsuan Yang, and Lei Zhang. 2017. NTIRE 2017 Challenge on Single Image Super-Resolution: Methods and Results. In *2017 IEEE Conference on Computer Vision and Pattern Recognition Workshops, CVPR Workshops 2017, Honolulu, HI, USA, July 21-26, 2017*. IEEE Computer Society, 1110–1121. https://doi.org/10.1109/CVPRW.2017.149

[40] Xintao Wang, Chao Dong, and Ying Shan. 2022. RepSR: Training Efficient VGG-style Super-Resolution Networks with Structural Re-Parameterization and Batch Normalization. *CoRR* abs/2205.05671 (2022). https://doi.org/10.48550/arXiv.2205.05671 arXiv:2205.05671

[41] Zhou Wang, Alan C. Bovik, Hamid R. Sheikh, and Eero P. Simoncelli. 2004. Image quality assessment: from error visibility to structural similarity. *IEEE Trans. Image Process.* 13, 4 (2004), 600–612. https://doi.org/10.1109/TIP.2003.819861

[42] Zhendong Wang, Xiaodong Cun, Jianmin Bao, Wengang Zhou, Jianzhuang Liu, and Houqiang Li. 2022. Uformer: A General U-Shaped Transformer for Image Restoration. In *IEEE/CVF Conference on Computer Vision and Pattern Recognition, CVPR 2022, New Orleans, LA, USA, June 18-24, 2022*. IEEE, 17662–17672. https://doi.org/10.1109/CVPR52688.2022.01716

[43] Kailu Wu, Chung-Kuei Lee, and Kaisheng Ma. 2022. MemSR: Training Memory-efficient Lightweight Model for Image Super-Resolution. In *International Conference on Machine Learning, ICML 2022, 17-23 July 2022, Baltimore, Maryland, USA (Proceedings of Machine Learning Research, Vol. 162)*, Kamalika Chaudhuri, Stefanie Jegelka, Le Song, Csaba Szepesvári, Gang Niu, and Sivan Sabato (Eds.). PMLR, 24076–24092. https://proceedings.mlr.press/v162/wu22f.html

[44] Syed Waqas Zamir, Aditya Arora, Salman Khan, Munawar Hayat, Fahad Shahbaz Khan, and Ming-Hsuan Yang. 2022. Restormer: Efficient Transformer for High-Resolution Image Restoration. In *IEEE/CVF Conference on Computer Vision and Pattern Recognition, CVPR 2022, New Orleans, LA, USA, June 18-24, 2022*. IEEE, 5718–5729. https://doi.org/10.1109/CVPR52688.2022.00564

[45] Roman Zeyde, Michael Elad, and Matan Protter. 2010. On Single Image Scale-Up Using Sparse-Representations. In *Curves and Surfaces - 7th International Conference, Avignon, France, June 24-30, 2010, Revised Selected Papers (Lecture Notes in Computer Science, Vol. 6920)*, Jean-Daniel Boissonnat, Patrick Chenin, Albert Cohen, Christian Gout, Tom Lyche, Marie-Laurence Mazure, and Larry L. Schumaker (Eds.). Springer, 711–730. https://doi.org/10.1007/978-3-642-27413-8_47

[46] Dafeng Zhang, Feiyu Huang, Shizhuo Liu, Xiaobing Wang, and Zhezhu Jin. 2022. SwinFIR: Revisiting the SwinIR with Fast Fourier Convolution and Improved Training for Image Super-Resolution. *CoRR* abs/2208.11247 (2022). https://doi.org/10.48550/arXiv.2208.11247 arXiv:2208.11247

[47] Xindong Zhang, Hui Zeng, Shi Guo, and Lei Zhang. 2022. Efficient Long-Range Attention Network for Image Super-Resolution. In *Computer Vision - ECCV 2022 - 17th European Conference, Tel Aviv, Israel, October 23-27, 2022, Proceedings, Part XVII (Lecture Notes in Computer Science, Vol. 13677)*, Shai Avidan, Gabriel J. Brostow, Moustapha Cissé, Giovanni Maria Farinella, and Tal Hassner (Eds.). Springer, 649–667. https://doi.org/10.1007/978-3-031-19790-1_39

[48] Xindong Zhang, Hui Zeng, Shi Guo, and Lei Zhang. 2022. Efficient Long-Range Attention Network for Image Super-Resolution. In *Computer Vision - ECCV 2022 - 17th European Conference, Tel Aviv, Israel, October 23-27, 2022, Proceedings, Part XVII (Lecture Notes in Computer Science, Vol. 13677)*, Shai Avidan, Gabriel J. Brostow, Moustapha Cissé, Giovanni Maria Farinella, and Tal Hassner (Eds.). Springer, 649–667. https://doi.org/10.1007/978-3-031-19790-1_39

[49] Xindong Zhang, Hui Zeng, and Lei Zhang. 2021. Edge-oriented Convolution Block for Real-time Super Resolution on Mobile Devices. In *MM '21: ACM Multimedia Conference, Virtual Event, China, October 20 - 24, 2021*, Heng Tao Shen, Yueting Zhuang, John R. Smith, Yang Yang, Pablo Cesar, Florian Metze, and Balakrishnan Prabhakaran (Eds.). ACM, 4034–4043. https://doi.org/10.1145/3474085.3475291

[50] Yulun Zhang, Kunpeng Li, Kai Li, Lichen Wang, Bineng Zhong, and Yun Fu. 2018. Image Super-Resolution Using Very Deep Residual Channel Attention Networks. In *Computer Vision - ECCV 2018 - 15th European Conference, Munich, Germany, September 8-14, 2018, Proceedings, Part VII (Lecture Notes in Computer Science, Vol. 11211)*, Vittorio Ferrari, Martial Hebert, Cristian Sminchisescu, and Yair Weiss (Eds.). Springer, 294–310. https://doi.org/10.1007/978-3-030-01234-2_18

[51] Yulun Zhang, Yapeng Tian, Yu Kong, Bineng Zhong, and Yun Fu. 2018. Residual Dense Network for Image Super-Resolution. In *2018 IEEE Conference on Computer Vision and Pattern Recognition, CVPR 2018, Salt Lake City, UT, USA, June 18-22, 2018*. Computer Vision Foundation / IEEE Computer Society, 2472–2481. https://doi.org/10.1109/CVPR.2018.00262

[52] Minqiang Zou, Jie Tang, and Gangshan Wu. 2020. Low Complexity Single Image Super-Resolution with Channel Splitting and Fusion Network. In *2020 IEEE International Conference on Acoustics, Speech and Signal Processing, ICASSP 2020, Barcelona, Spain, May 4-8, 2020*. IEEE, 2398–2402. https://doi.org/10.1109/ICASSP40776.2020.9053516