xLSTM-UNet can be an Effective 2D & 3D Medical Image Segmentation Backbone with Vision-LSTM (ViL) better than its Mamba Counterpart

Tianrun Chen[1,2+], Chaotao Ding[2,3+], Lanyun Zhu[4+], Tao Xu[3+], Yan Wang[7], Deyi Ji[6], Ying Zang[3*], Zejian Li[5]

[1] College of Computer Science and Technology, Zhejiang University.
[2] KOKONI, Moxin (Huzhou) Tech. Co., LTD.
[3] School of Information Engineering, Huzhou University.
[4] Information Systems Technology and Design Pillar, Singapore University of Technology and Design.
[5] School of Software Technology, Zhejiang University.
[6] School of Information Science and Technology, University of Science and Technology of China.
[7] School of Instrumentation and Optoelectronic Engineering; State Key Laboratory of Software Development Environment, Beihang University.
+ Equal Contribution * Corresponding Author
tianrun.chen@zju.edu.cn; 02750@zjhu.edu.cn
Project Page: http://tianrun-chen.github.io/xLSTM-Unet/
TL; DR: We replace Mamba with xLSTM in UMamba. It works better!

论文地址：https://arxiv.org/pdf/2407.01530

Github 地址：https://github.com/tianrun-chen/xLSTM-UNet-Pytorch

七月份挂在 Arxiv 上的一篇文章。

话接之前的 RWKV 架构，Mamba、xLSTM 和 RWKV 的提出，主要还是用于解决 self-attention 二次方复杂度问题，更有效的进行全局建模。

Mamba 、xLSTM 和 RWKV 都是源于 NLP 任务，相对来说 xLSTM 跟 RWKV 热度没有 Mamba 那么大，不过，这对我们来说，是水的一个机会。

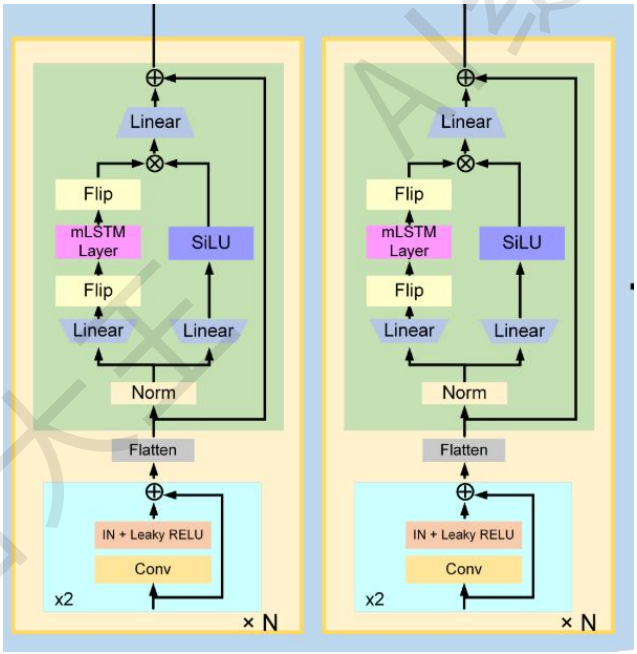

整体结构还是沿用 Transformer 的架构，在 token mixer 部分使用 mLSTM 模块，能达到比 mamba 更好的性能。

至于原理，大家可以先不用了解，可以先用一下在自己的任务中，直接在 token mixer 中替换使用或者进行 A+B+C 缝合， 试试效果，有提升，或者自己感兴趣，再去看看。

2 Method

TL; DR: We just replaced Mamba with xLSTM blocks in Mamba-based UNet network [41,47] and it works.

Table 1. Performance Comparison of Different Methods

Methods	Organs in Abdomen MRI 2D		Instruments in Endoscopy		Cells in Microscopy
	DSC ↑	NSD ↑	DSC ↑	NSD ↑	F1 ↑
nnU-Net	0.7450 ± 0.1117	0.8153 ± 0.1145	0.6264 ± 0.3024	0.6412 ± 0.3074	0.5383 ± 0.2657
SegResNet	0.7317 ± 0.1379	0.8034 ± 0.1386	0.5820 ± 0.3268	0.5968 ± 0.3303	0.5411 ± 0.2633
UNETR	0.5747 ± 0.1672	0.6309 ± 0.1858	0.5017 ± 0.3201	0.5168 ± 0.3235	0.4357 ± 0.2572
SwinUNETR	0.7028 ± 0.1348	0.7669 ± 0.1442	0.5528 ± 0.3089	0.5683 ± 0.3123	0.3967 ± 0.2621
U-Mamba_Bot	0.7588 ± 0.1051	0.8285 ± 0.1074	0.6540 ± 0.3008	0.6692 ± 0.3050	0.5389 ± 0.2817
U-Mamba_Enc	0.7625 ± 0.1082	0.8327 ± 0.1087	0.6303 ± 0.3067	0.6451 ± 0.3104	0.5607 ± 0.2784
Ours_bot	0.7636 ± 0.1006	0.8322 ± 0.1034	**0.6843 ± 0.3005**	**0.7001 ± 0.3046**	0.5818 ± 0.2386
Ours_enc	**0.7747 ± 0.0950**	**0.8374 ± 0.0951**	**0.6843 ± 0.3024**	**0.7001 ± 0.3067**	**0.6036 ± 0.2435**

AI缝合大王

论文：Vision-LSTM: xLSTM as Generic Vision Backbone

论文地址：https://arxiv.org/pdf/2406.04303

Github 地址：https://github.com/NX-AI/vision-lstm

这篇文章提出了视觉版的 LSTM,提出了 mLSTM BLOCK

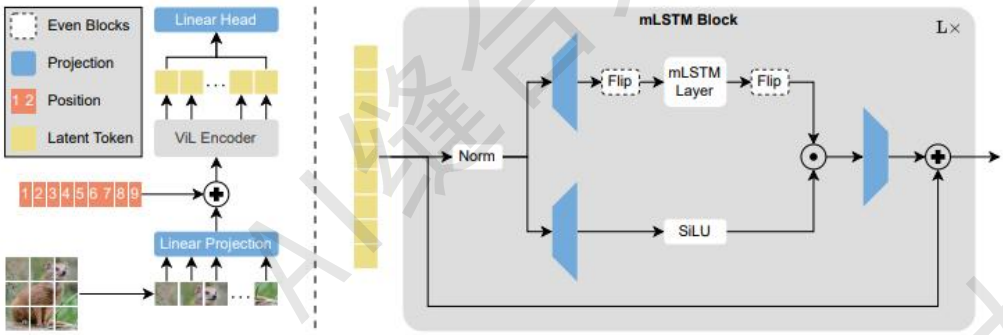

Figure 1: Schematic overview of Vision-LSTM (ViL). Following ViT [18], an input image is split into patches and linearly projected. Then, a learnable vector is added per position to the patches, producing a sequence of patch tokens. This sequence is then processed by alternating mLSTM blocks where even blocks flip the sequence before and after the mLSTM layer. For classification, ViL uses the concatenation of the first and the last patch as input to a linear classification head.

AI缝合大王