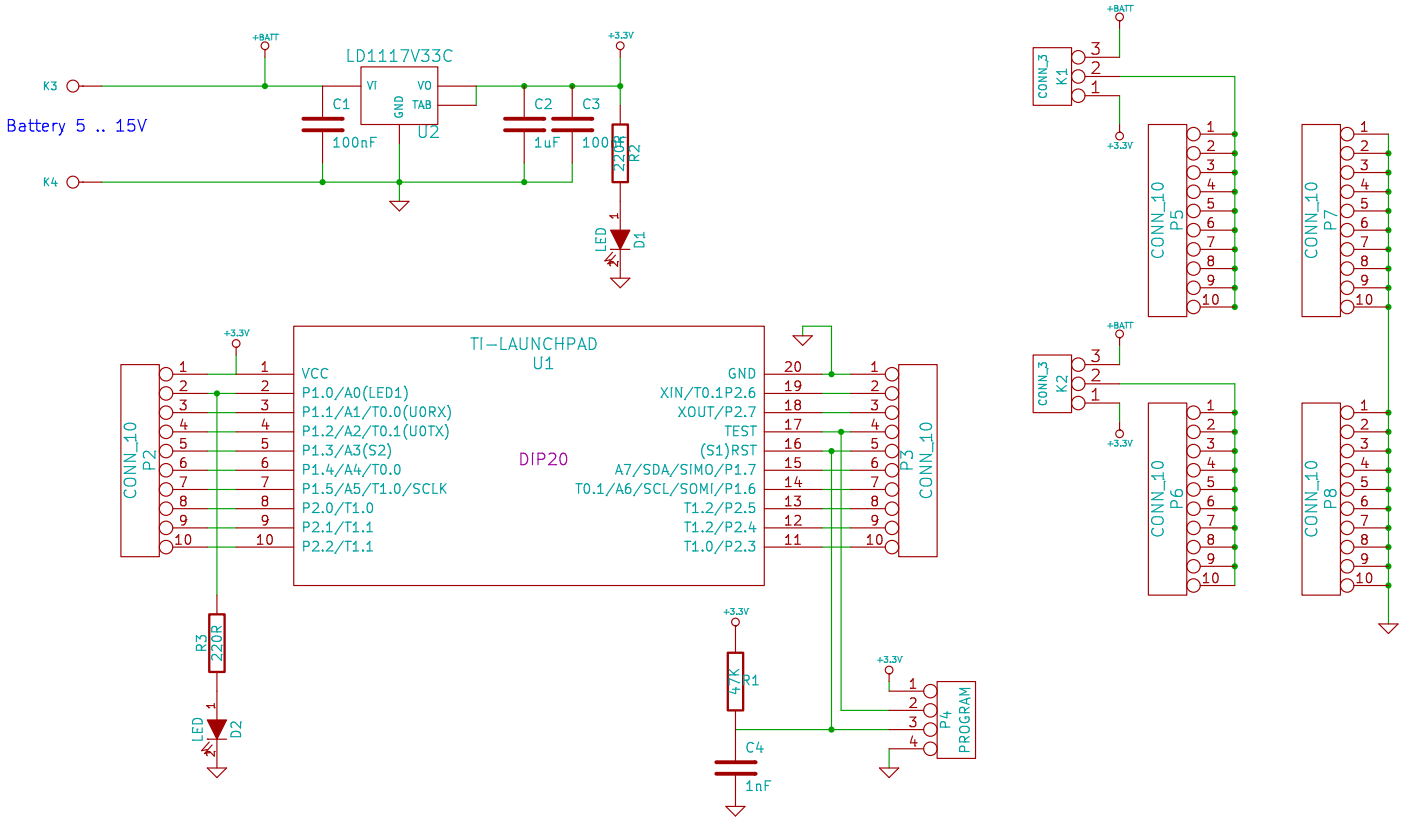

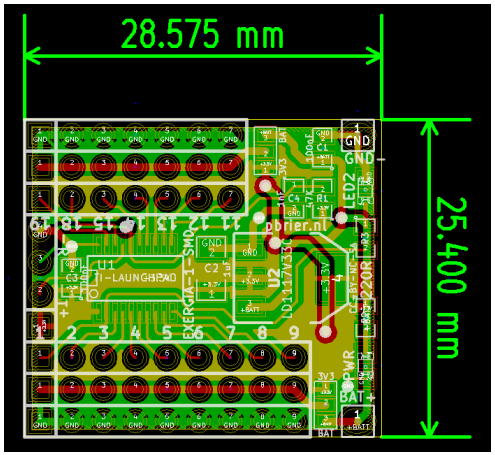

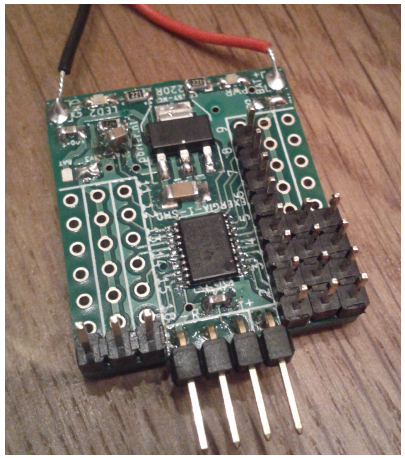

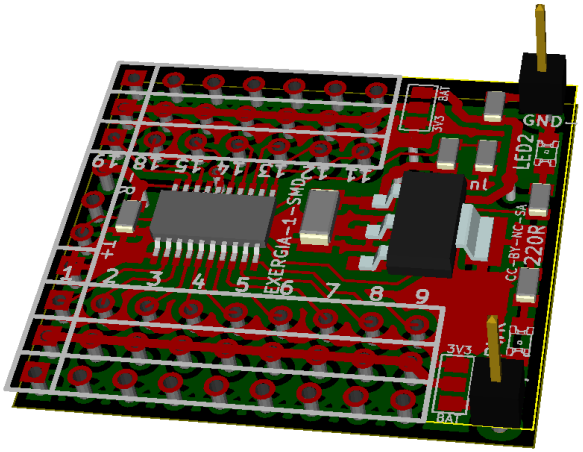

File: enerpcb.sch Sheet: /	Exergia / pbrier.nl / 2013 CC-BY-NC-SA 3.0 creativecommons.org	
Title: EXERGIA-1		
Size: A4	Date: 5 jan 2013	**Rev:** 1
KiCad E.D.A. eeschema (2012-01-19 BZR 3256)-stable		Id: 1/1