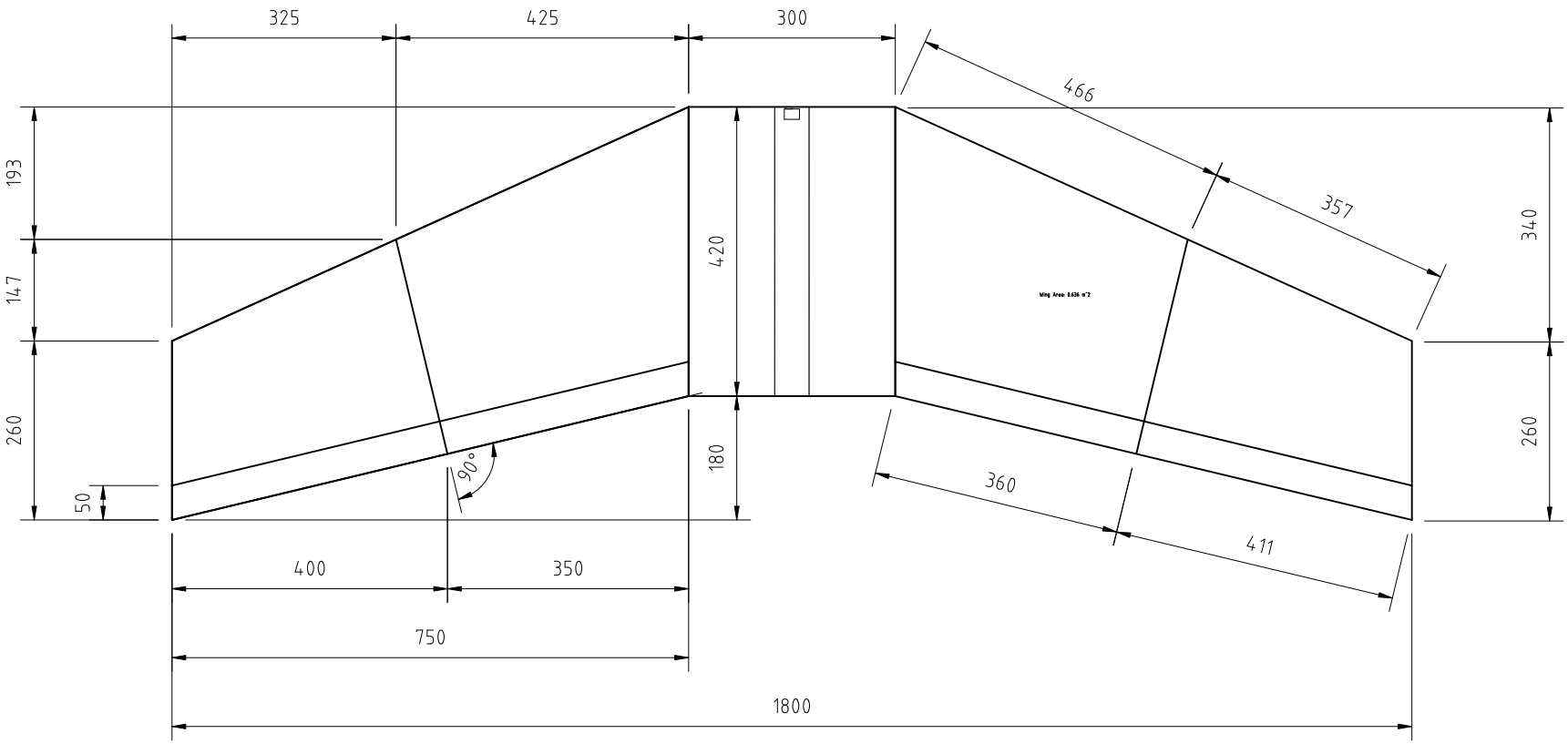

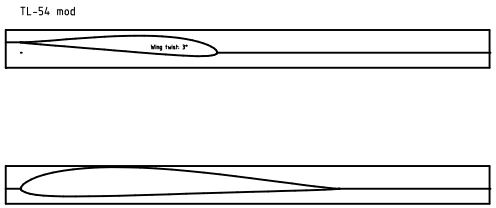

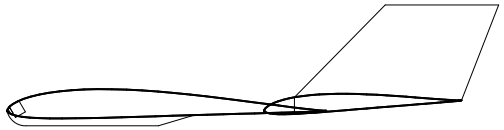

Vanguard MKII.3	
Scale: 1:10	
Simon Wunderlin	Rev 1.2, 2013-08-07