We use 100K for external pull-ups (not using internal pull-ups)
Schottky diodes to suppress overvoltages.
1K to limit current during overvoltage pulses
10nF capacitor to debounce signal (better than software debounce)

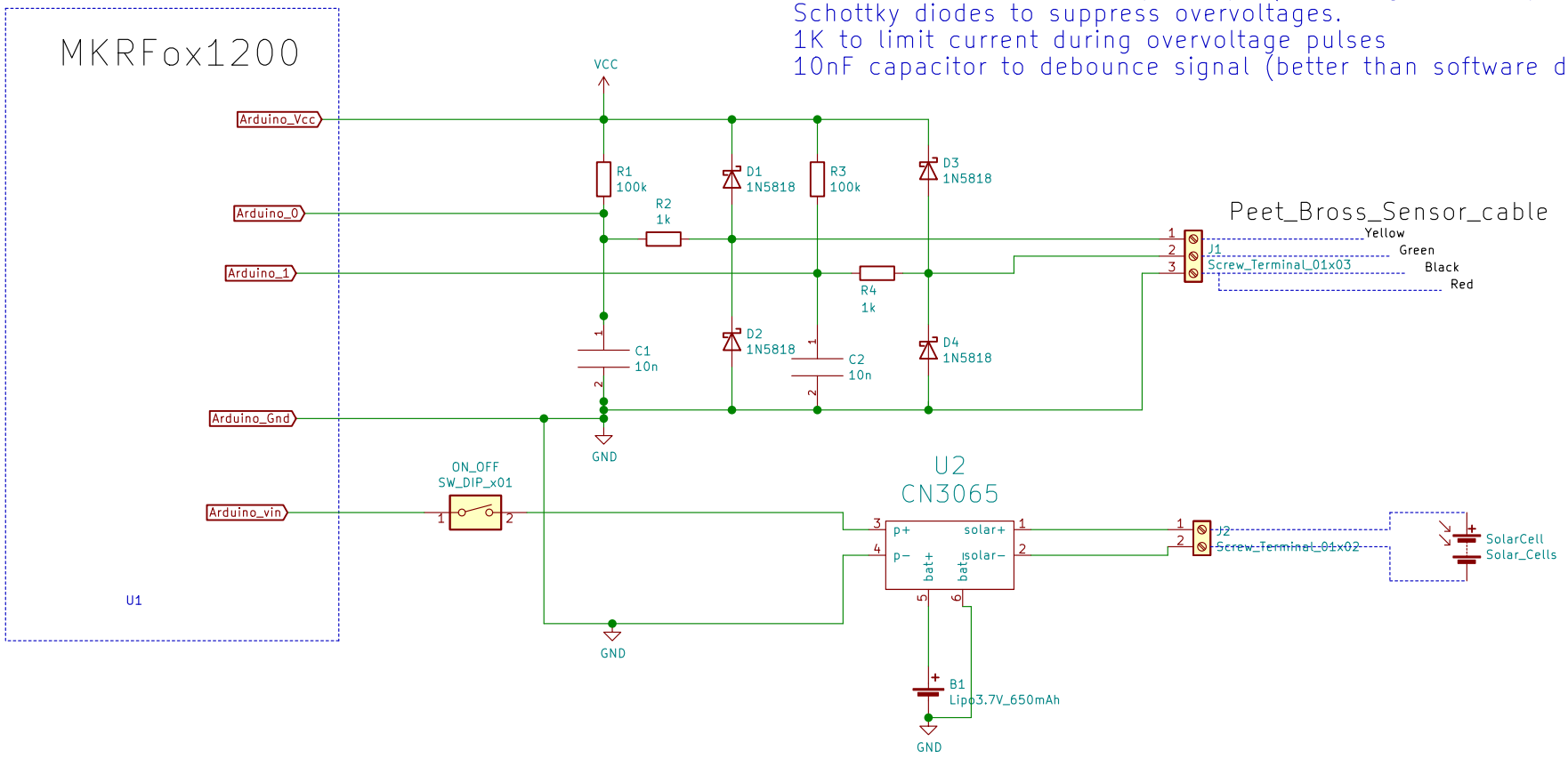

pascal.caunegre@gmail.com

Sheet: /
File: SWiM.sch

Title: Sigfox-connected (Arduino-based) Wind Meter

Size: A4	Date: 2021-10-12	Rev: 1.1
KiCad E.D.A. eeschema 5.1.10-88a1d61d5890ubuntu20.04.1		Id: 1/1