We use 100K for external pull-ups (not using internal pull-ups)
Zener diodes for ESD pulses.
1K to limit current during ESD pulses
10nF capacitor to debounce signal (better than software debounce)

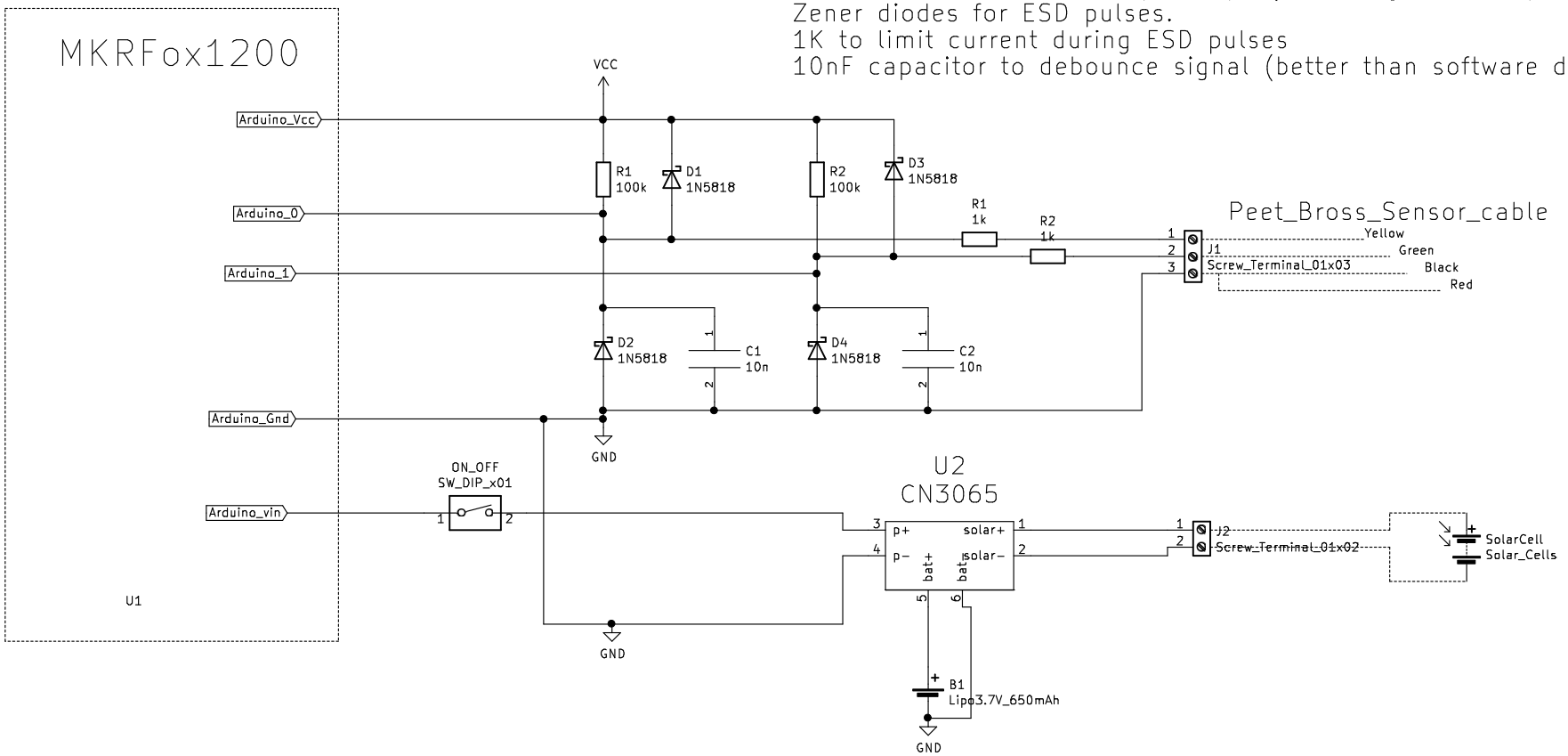

pascal.caunegre@free.fr

Sheet: /
File: SWiM.sch

Title: Arduino (sigfox) Wind meter

Size: A4	Date: 2021-06-29	**Rev: 1.0**
KiCad E.D.A. eeschema 5.1.10-88a1d61d5890ubuntu20.04.1		Id: 1/1