ST-Link V2.1 V. 1.0

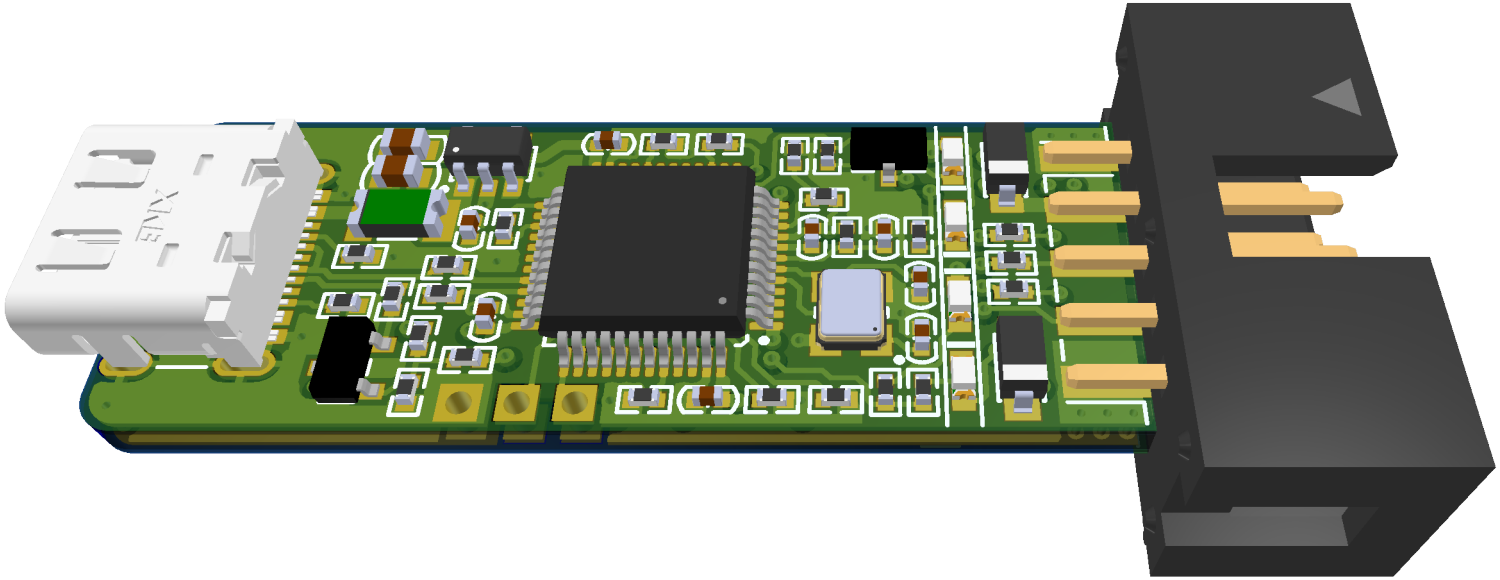

Top

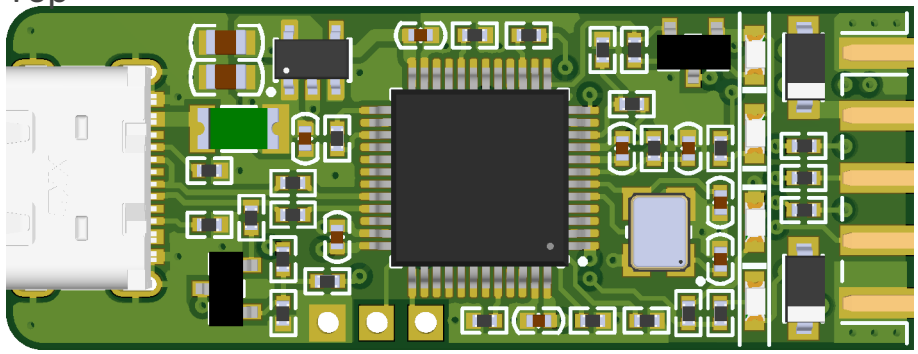

Bottom

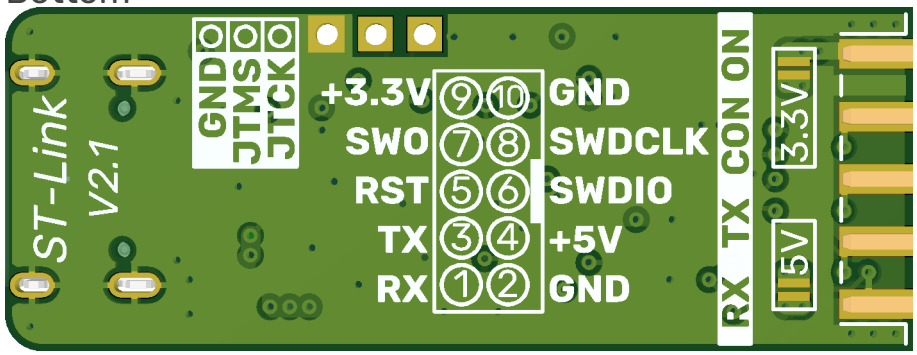

View from Top side (Scale 4:1)

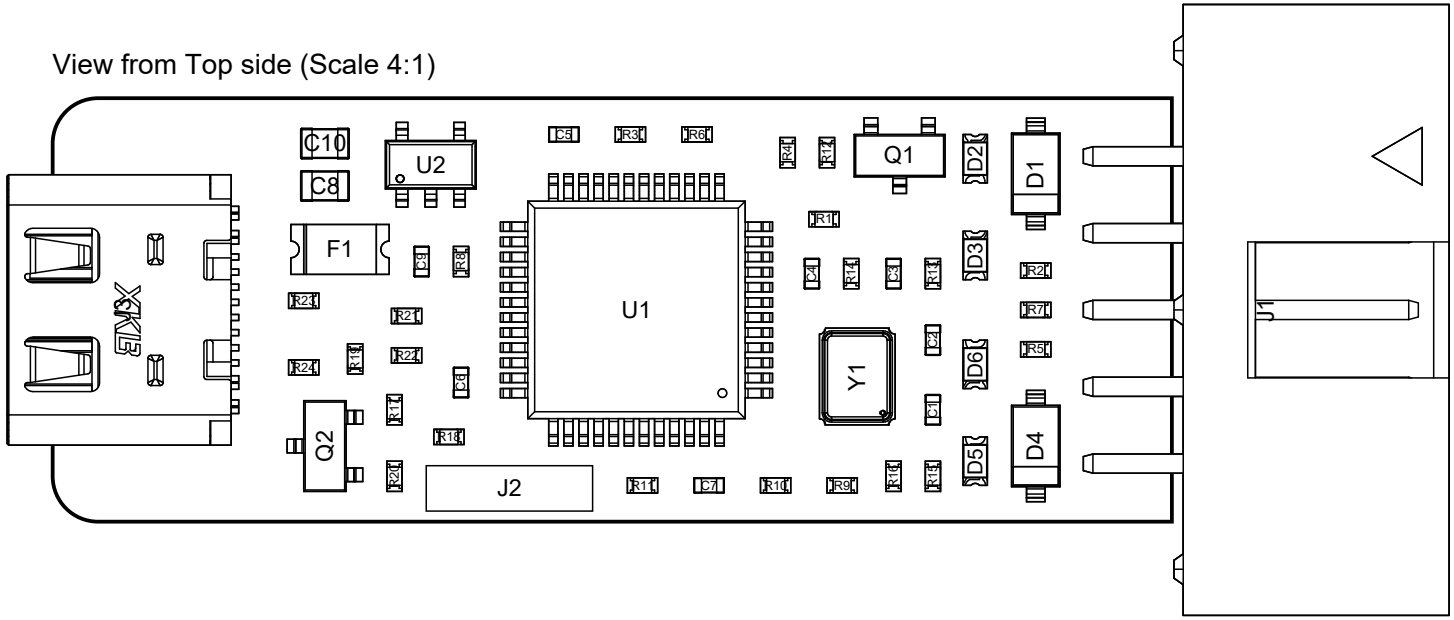

View from Top side

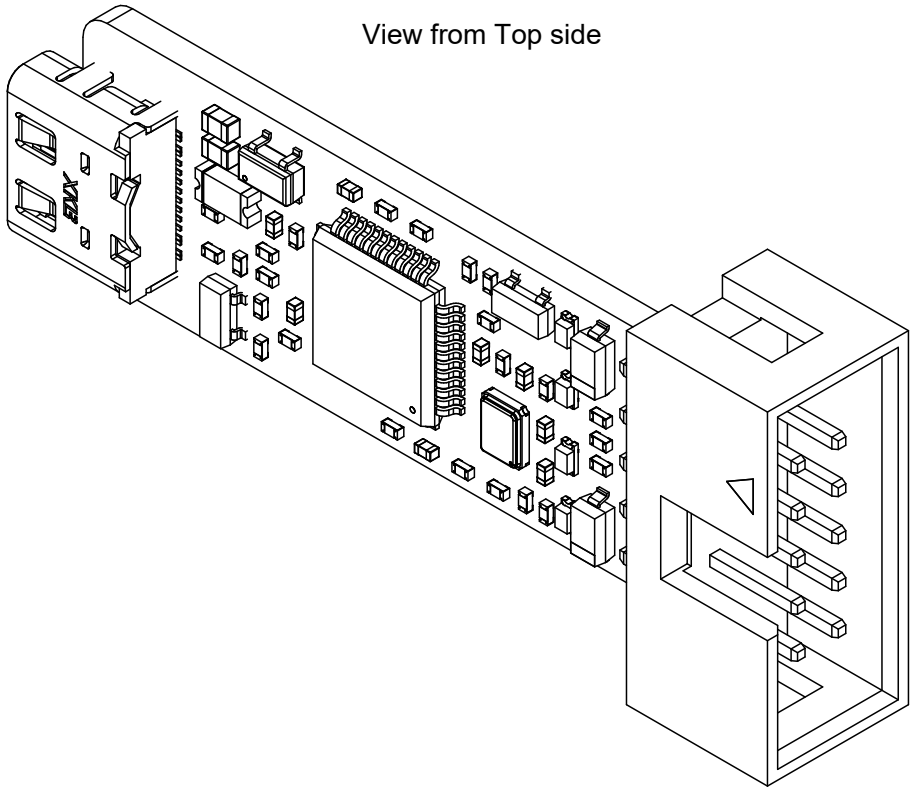

Component View SBH11-PBPC-D05-ST-BK(SULLINS_SBH11-PBPC-D05-ST-BK-H)

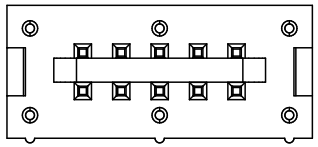

Top Layer

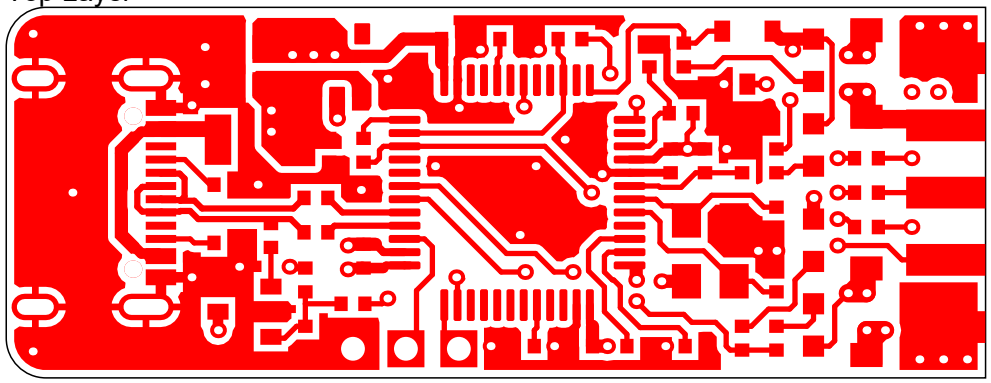

Layer 2

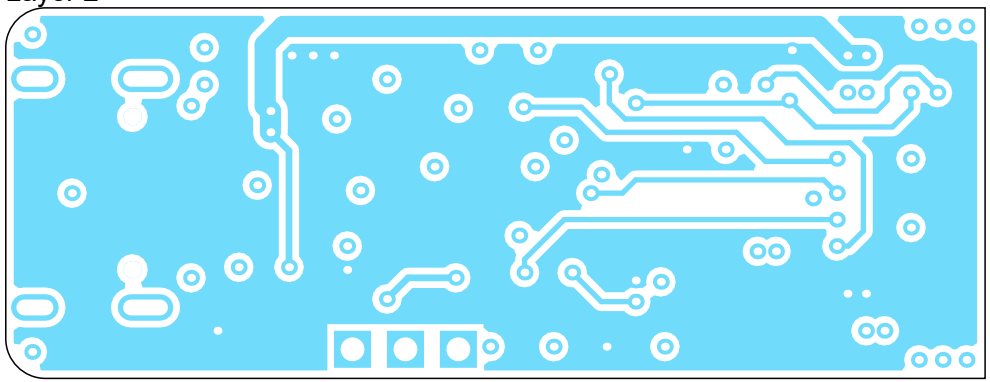

GND

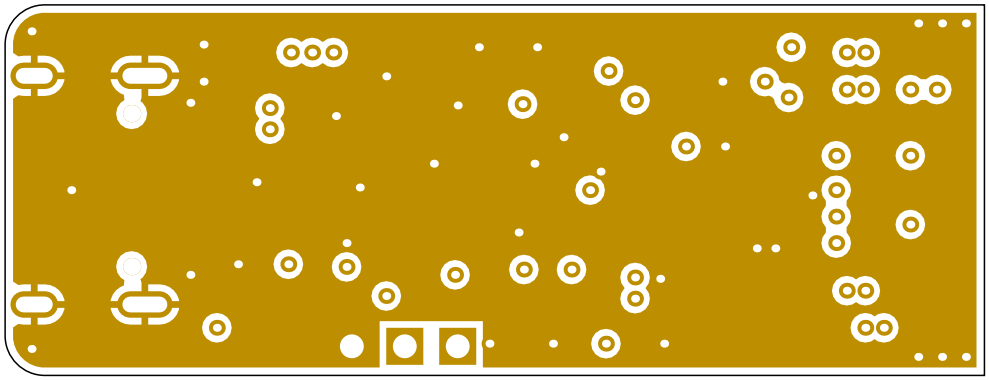

Bottom Layer

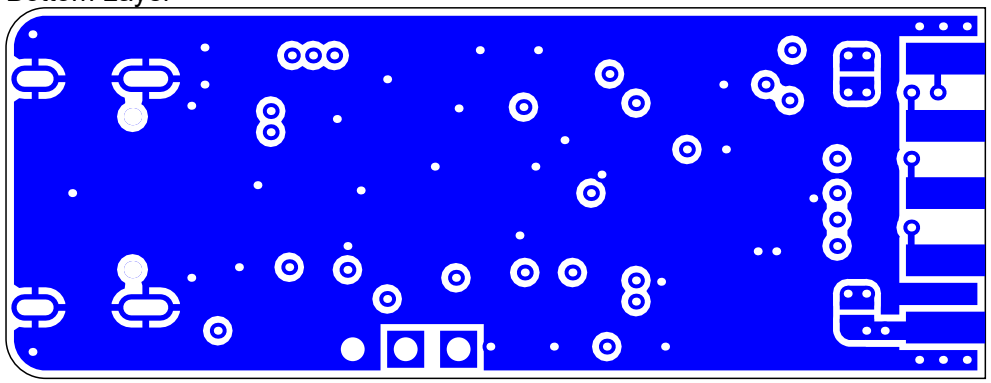

Top View

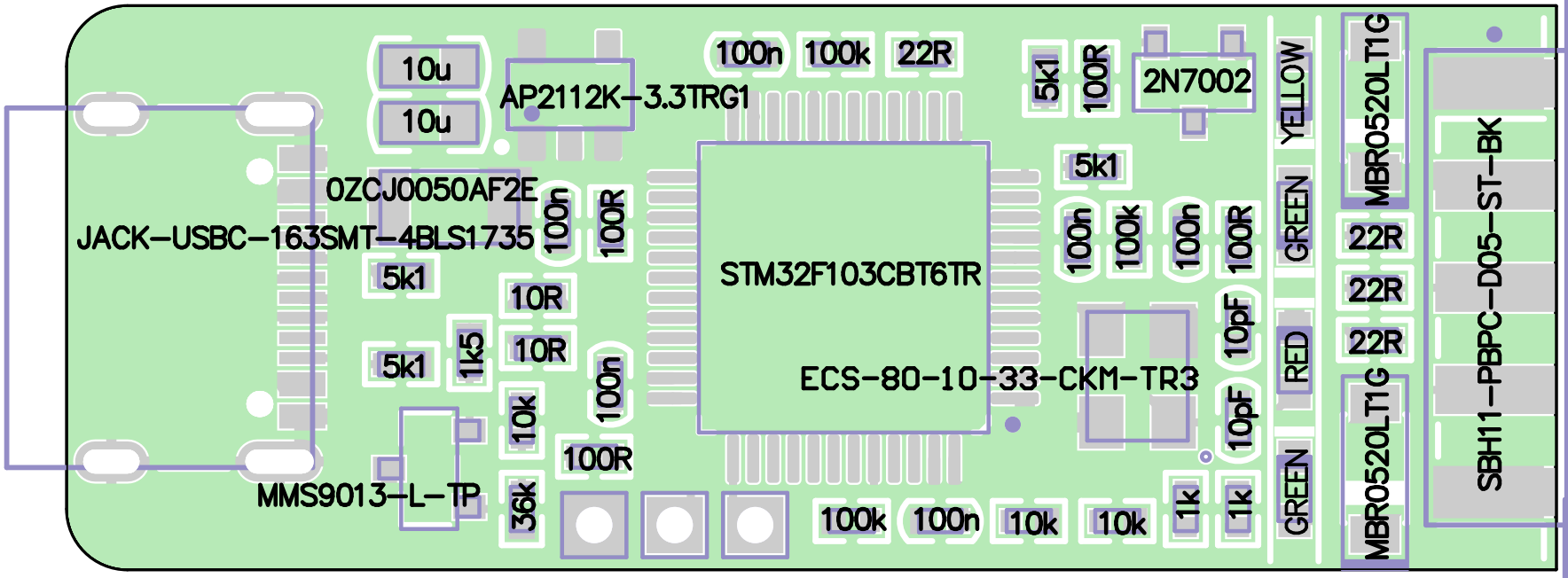

Bottom View

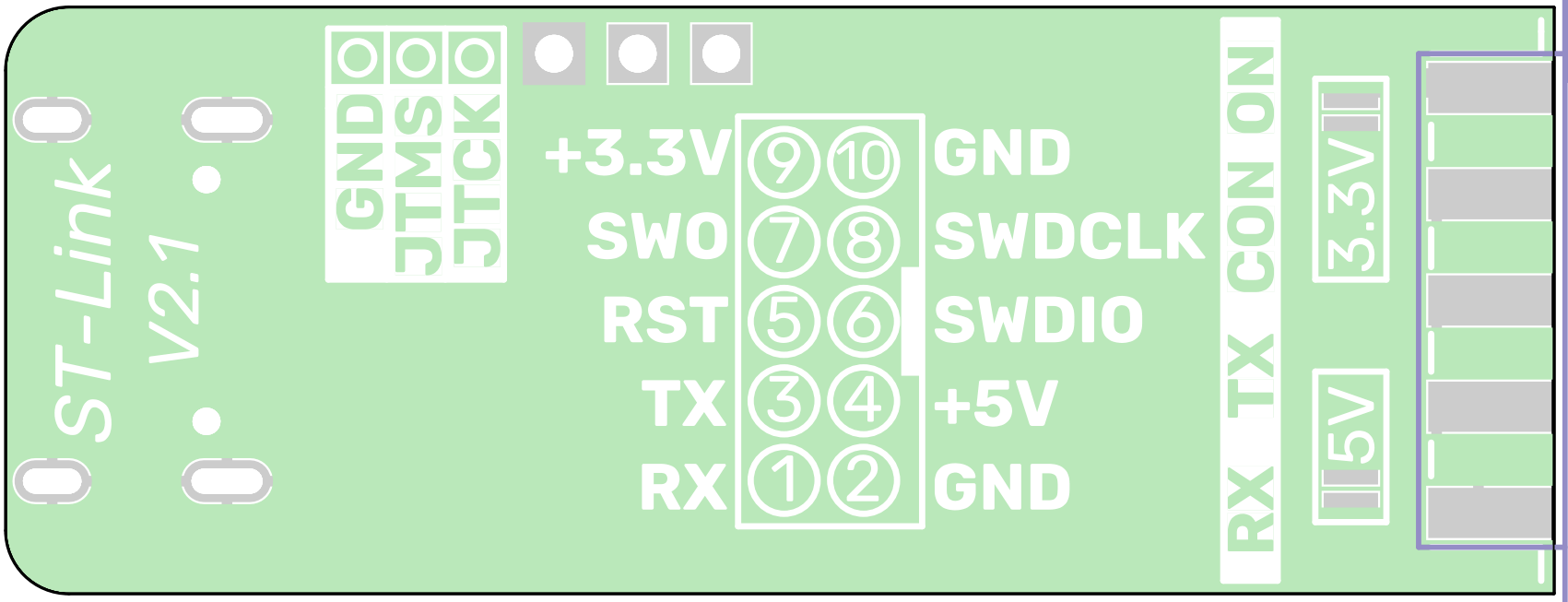

Top View

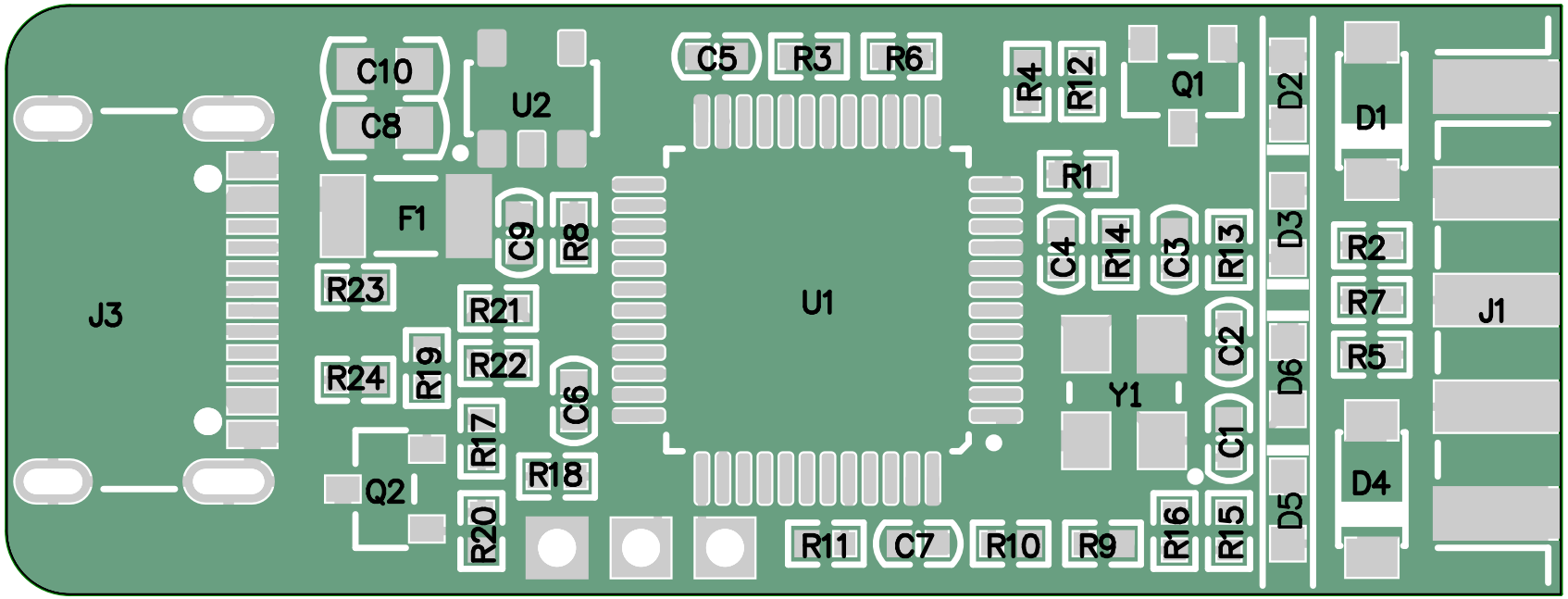

Bottom View

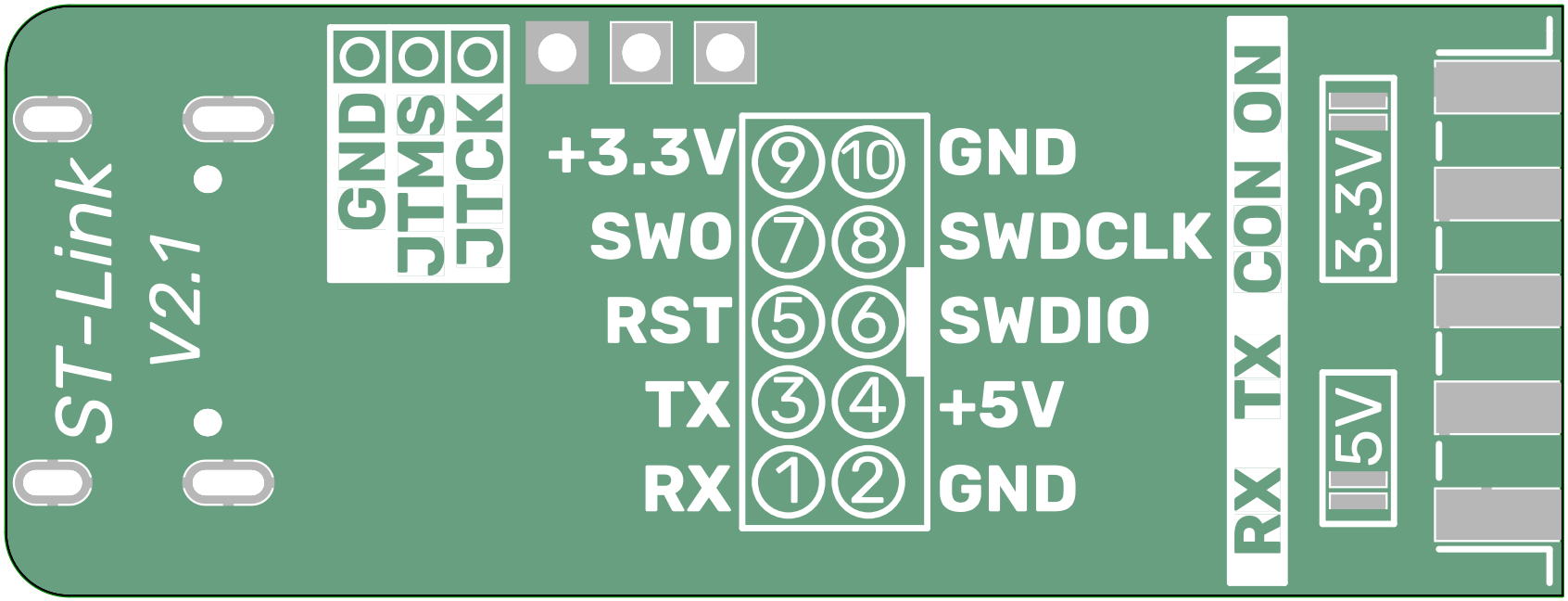

Layer Stack Legend

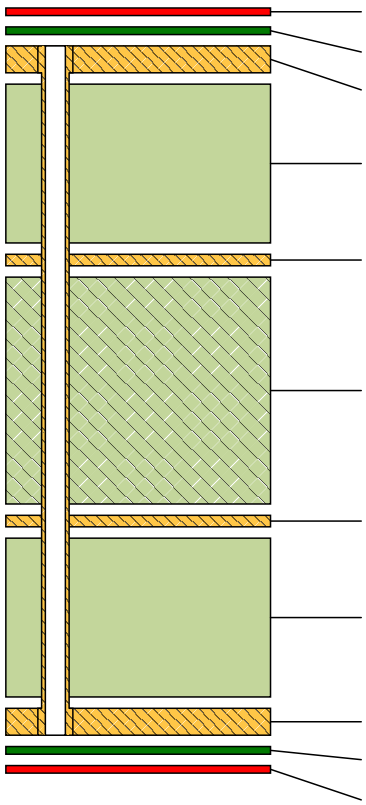

Material	Layer	Thickness	Dielectric Material	Type	Gerber
	Top Overlay			Legend	GTO
Surface Material	Top Solder	0.01mm	Solder Resist	Solder Mask	GTS
Copper	Top Layer	0.04mm		Signal	GTL
Prepreg		*0.21mm*	*PP-006*	*Dielectric*	
CF-004	GND	0.02mm		Signal	G1
		1.06mm	*FR-4*	*Dielectric*	
CF-004	Layer 2	0.02mm		Signal	G2
Prepreg		*0.21mm*	*PP-006*	*Dielectric*	
Copper	Bottom Layer	0.04mm		Signal	GBL
Surface Material	Bottom Solder	0.01mm	Solder Resist	Solder Mask	GBS
	Bottom Overlay			Legend	GBO

Total thickness: 1.61mm

Bill Of Materials

Line #	Designator	Comment	Quantity	Manufacturer Part Number 1	Case/Package	Description
1	C1, C2	10pF	2	GCM1555C1H100JA16D	0402	50V 10pF C0G ±5% 0402 Multilayer Ceramic Capacitors MLCC - SMD/SMT ROHS
2	C3, C4, C5, C6, C7, C9	100n	6	GCM155R71H104KE02D	0402	50V 100nF X7R ±10% 0402 Multilayer Ceramic Capacitors MLCC - SMD/SMT ROHS
3	C8, C10	10u	2	GRM188C81C106MA73D	0603	10 µF ±20% 16V Ceramic Capacitor X6S 0603 (1608 Metric)
4	D1, D4	MBR0520LT1G	2	MBR0520LT1G	SOD-123-2	Diode, Schottky Barrier, Vr 20V, If 0.5A, Pkg SOD-123, Vf 0.385V, Tj +125DEGC, Cs 5.5A
5	D2	YELLOW	1	150060YS75003		Led, Yellow, 550Mcd, 595Nm Rohs Compliant: Yes
6	D3, D5	GREEN	2	150060VS75003		Led, Bright Green, 100Mcd, 572Nm Rohs Compliant: Yes
7	D6	RED	1	150060RS75003	0603	SMT Mono-Color Chip LED Waterclear Advance WL-SMCW_0603_ADVANCE
8	F1	0ZCJ0050AF2E	1	0ZCJ0050AF2E	1206	Resettable Fuse, PPTC, 1206 (3216 Metric), 0ZCJ Series, 24 VDC, 500 mA, 1 A, 0.1 s
9	J1	SBH11-PBPC-D05-ST-BK	1	SBH11-PBPC-D05-ST-BK		Conn Shrouded Header (4 Sides) HDR 10 POS 2.54mm Solder ST Top Entry Thru-Hole
10	J3	JACK-USBC-163SMT-4BLS1735	1	JACK-USBC-163SMT-4BLS1735		Usb Type C Jack IPX7 SMT
11	Q1	2N7002	1	2N7002H6327XTSA2	SOT-23	MOSFET N-CH 60V 300MA SOT23-3 N-Channel 60 V 300mA (Ta) 500mW (Ta) Surface Mount PG-SOT23
12	Q2	MMS9013-L-TP	1	MMS9013-L-TP	SOT-23	Small Signal Bipolar Transistor, 0.5A I(C), 25V V(BR)CEO, 1-Element, NPN, Silicon
13	R1, R4, R23, R24	5k1	4	AC0402FR-135K1L	0402	Res Thick Film 0402 5.1K Ohm 1% 0.063W(1/16W) ±100ppm/°C Pad SMD T/R Automotive AEC-Q200
14	R2, R5, R6, R7	22R	4	AC0402FR-7W22RL	0402	125mW Thick Film Resistors ±100ppm/°C ±1% 22Ω 0402 Chip Resistor - Surface Mount ROHS
15	R3, R11, R14	100k	3	AC0402FR-7W100KL	0402	Res Thick Film 0402 100K Ohm 1% 0.125W(1/8W) ±100ppm/°C Pad SMD T/R Automotive AEC-Q200
16	R8, R12, R13, R18	100R	4	AC0402FR-7W100RL	0402	Res Thick Film 0402 100 Ohm 1% 0.125W(1/8W) ±100ppm/C Pad SMD T/R Automotive AEC-Q200
17	R9, R10, R17	10k	3	AC0402FR-7W10KL	0402	Res Thick Film 0402 10K Ohm 1% 0.125W(1/8W) ±100ppm/C Pad SMD Automotive T/R
18	R15, R16	1k	2	AC0402FR-7W1KL	0402	Res Thick Film 0402 1K Ohm 1% 0.125W(1/8W) ±100ppm/C Pad SMD Automotive T/R
19	R19	1k5	1	AC0402FR-7W1K5L	0402	Fixed Resistor, Metal Glaze/thick Film, 0.125W, 1500ohm, 75V, 1% +/-Tol, 100ppm/Cel, Surface Mount, 0402
20	R20	36k	1	AC0402FR-7W36KL	0402	Chip Resistor Automotive Grade Thick Film 0402 36kOhm 1% Paper T/R
21	R21, R22	10R	2	AC0402FR-7W10RL	0402	Res Thick Film 0402 10 Ohm 1% 0.125W(1/8W) ±100ppm/C Pad SMD T/R Automotive AEC-Q200
22	U1	STM32F103CBT6TR	1	STM32F103CBT6TR	LQFP	MCU 32-bit STM32F1 ARM Cortex M3 RISC 128KB Flash 2.5V/3.3V 48-Pin LQFP T/R
23	U2	AP2112K-3.3TRG1	1	AP2112K-3.3TRG1	SOT-23-5	AP2112 Series 0.6 A 3.3 V Fixed Output SMT LDO Linear Regulator - SOT23-5
24	Y1	ECS-80-10-33-CKM-TR3	1	ECS-80-10-33-CKM-TR3	4-SMD (3.2x2.5)	CRYSTAL 8.0000MHZ 10PF SMD