ST-Link V2.1

Board Revision: 1.0

Variant: [No Variations]

22.03.2026

RELEASED 22-MAR-2026

Table of contents

Sheet 1: [01]-COVER PAGE.SchDoc

Sheet 2: [02]-STLinkV2_1.SchDoc

Revision

22.03.2026	Initial Release. Revision 1.0

DESIGN CONSIDERATIONS

DESIGN NOTE:
informational design notes .

DESIGN NOTE:
cautionary design notes.

DESIGN NOTE:
debug notes.

DESIGN NOTE:
critical design notes.

LAYOUT NOTE:
critical layout guidelines.

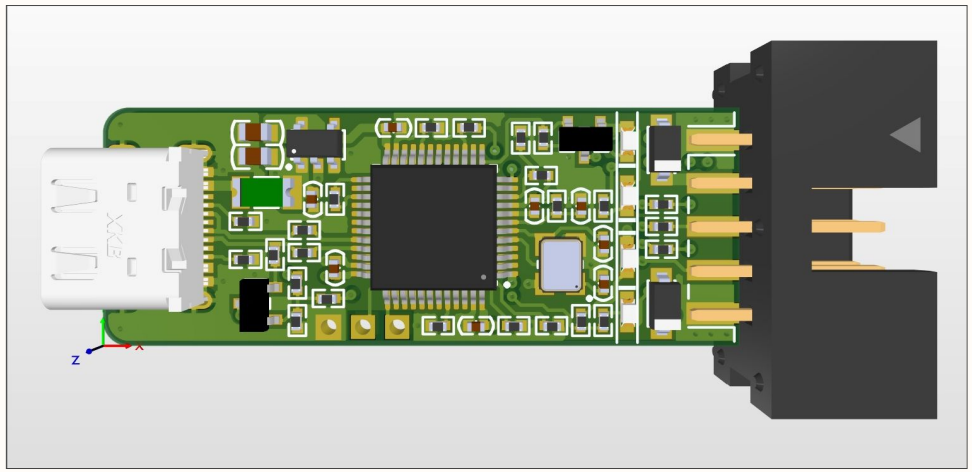

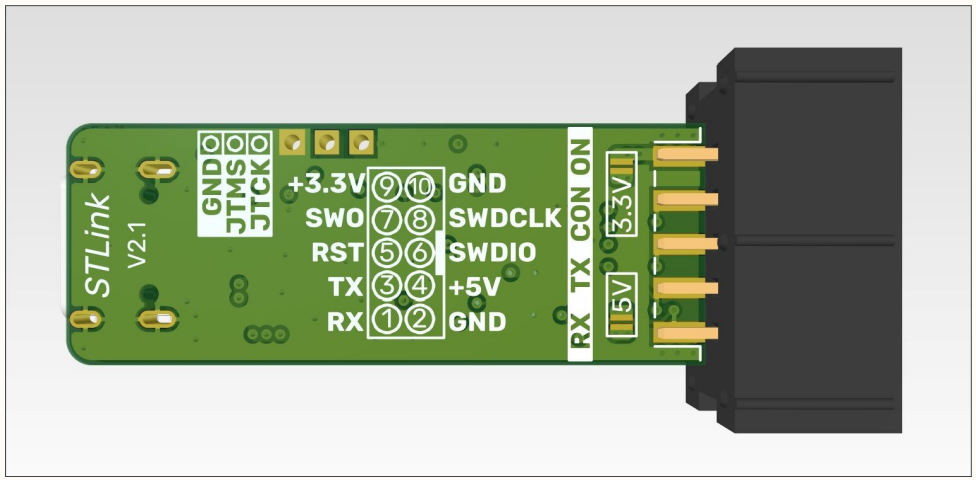

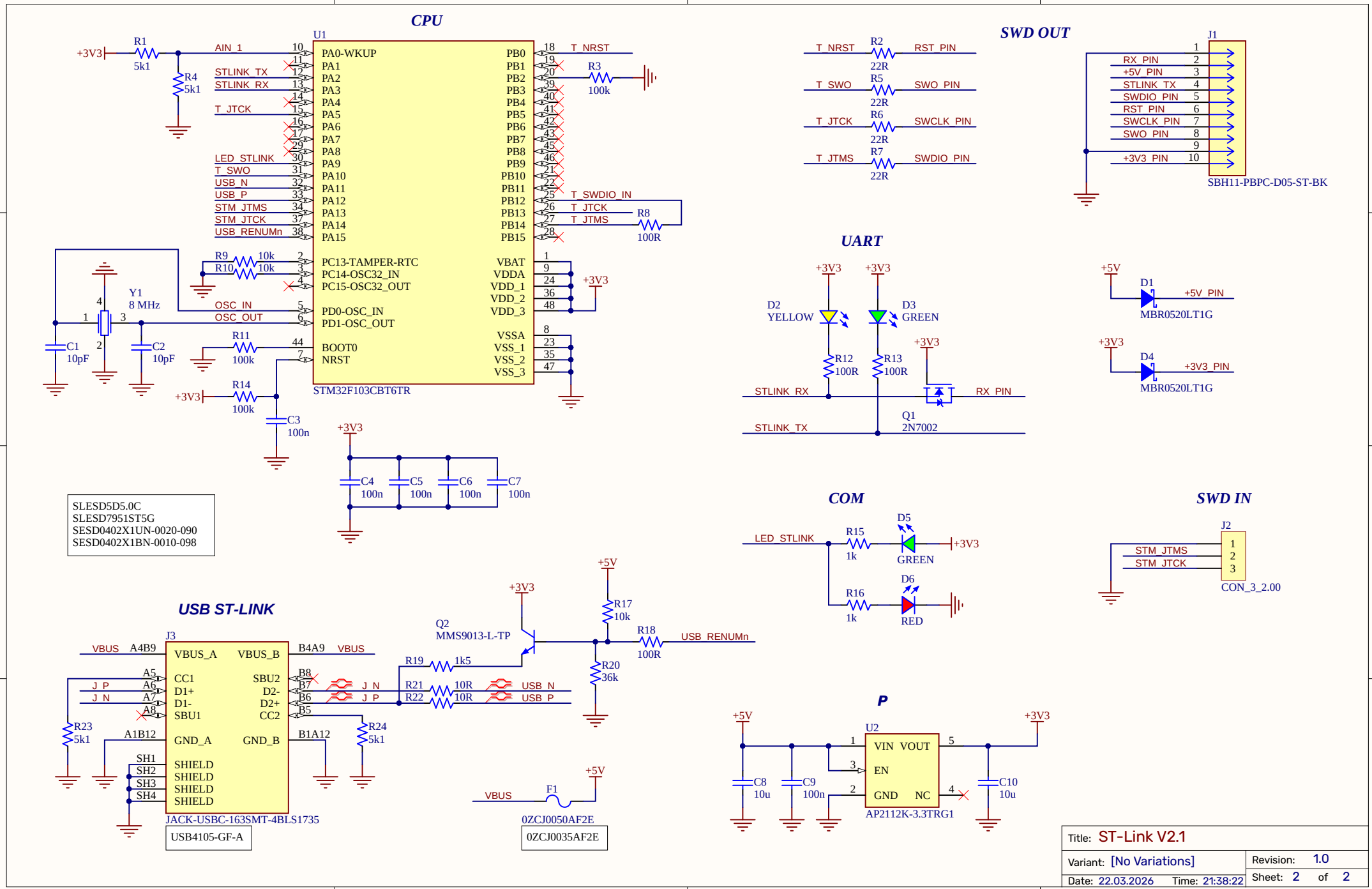
CPU
U1
STM32F103CBT6TR
PA0-WKUP
PA1
PA2
PA3
PA4
PA5
PA6
PA7
PA8
PA9
PA10
PA11
PA12
PA13
PA14
PA15
PB0
PB1
PB2
PB3
PB4
PB5
PB6
PB7
PB8
PB9
PB10
PB11
PB12
PB13
PB14
PB15
PC13-TAMPER-RTC
PC14-OSC32_IN
PC15-OSC32_OUT
PD0-OSC_IN
PD1-OSC_OUT
BOOT0
NRST
VBAT
VDDA
VDD_1
VDD_2
VDD_3
VSSA
VSS_1
VSS_2
VSS_3
AIN_1
STLINK_TX
STLINK_RX
T_JTCK
LED_STLINK
T_SWO
USB_N
USB_P
STM_JTMS
STM_JTCK
USB_RENUMn
T_NRST
T_SWDIO_IN
T_JTCK
T_JTMS
OSC_IN
OSC_OUT
+3V3
R1 5k1
R4 5k1
R3 100k
R8 100R
R9 10k
R10 10k
R11 100k
R14 100k
Y1 8 MHz
C1 10pF
C2 10pF
C3 100n
C4 100n
C5 100n
C6 100n
C7 100n
SLESD5D5.0C
SLESD7951ST5G
SESD0402X1UN-0020-090
SESD0402X1BN-0010-098
SWD OUT
J1
SBH11-PBPC-D05-ST-BK
T_NRST
T_SWO
T_JTCK
T_JTMS
R2 22R
R5 22R
R6 22R
R7 22R
RST_PIN
SWO_PIN
SWCLK_PIN
SWDIO_PIN
RX_PIN
+5V_PIN
STLINK_TX
SWDIO_PIN
RST_PIN
SWCLK_PIN
SWO_PIN
+3V3_PIN
UART
D2 YELLOW
D3 GREEN
R12 100R
R13 100R
Q1 2N7002
STLINK_RX
STLINK_TX
RX_PIN
+5V
D1
MBR0520LT1G
+5V_PIN
+3V3
D4
MBR0520LT1G
+3V3_PIN
COM
LED_STLINK
R15 1k
R16 1k
D5 GREEN
D6 RED
SWD IN
J2
CON_3_2.00
STM_JTMS
STM_JTCK
USB ST-LINK
J3
JACK-USBC-163SMT-4BLS1735
USB4105-GF-A
VBUS_A
VBUS_B
CC1
D1+
D1-
SBU1
SBU2
D2-
D2+
CC2
GND_A
GND_B
SHIELD
VBUS
A4B9
B4A9
A5
A6
A7
A8
B8
B7
B6
B5
A1B12
B1A12
SH1
SH2
SH3
SH4
J P
J N
R23 5k1
R24 5k1
Q2 MMS9013-L-TP
R17 10k
R18 100R
R19 1k5
R20 36k
R21 10R
R22 10R
USB_RENUMn
USB_N
USB_P
+5V
F1
0ZCJ0050AF2E
0ZCJ0035AF2E
P
U2
AP2112K-3.3TRG1
VIN
VOUT
EN
GND
NC
C8 10u
C9 100n
C10 10u
Title: ST-Link V2.1
Variant: [No Variations]
Revision: 1.0
Date: 22.03.2026
Time: 21:38:22
Sheet: 2 of 2