STM32F373 V. A

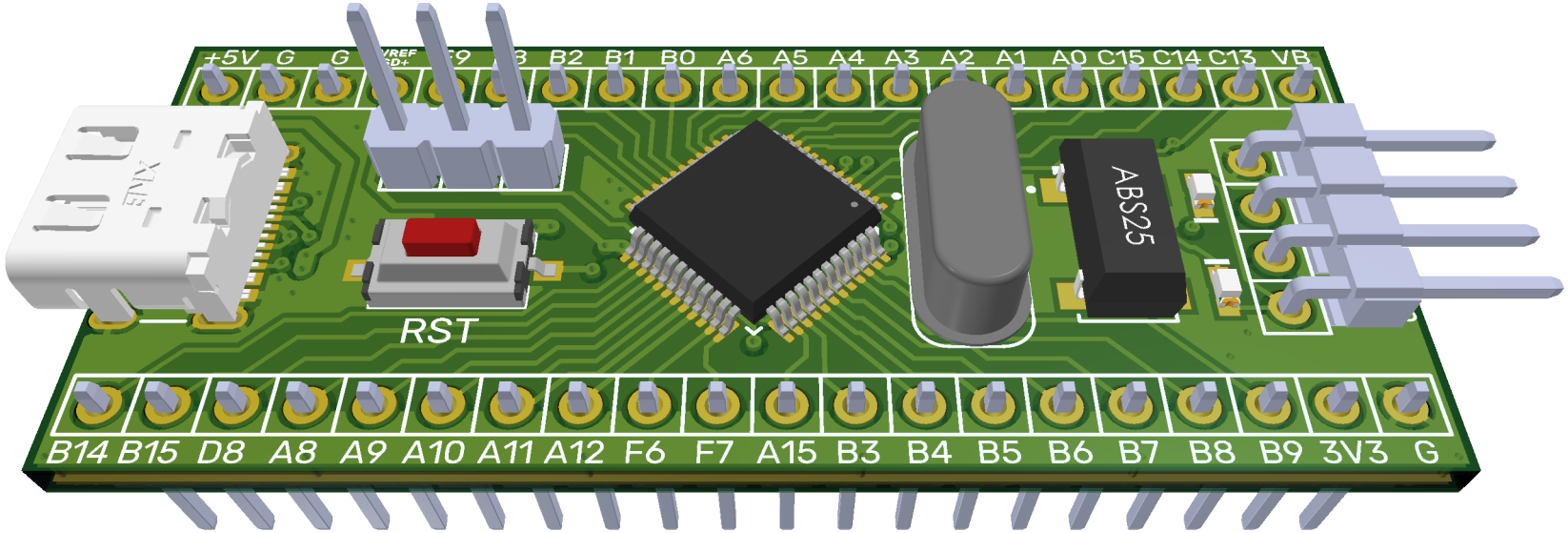

Top

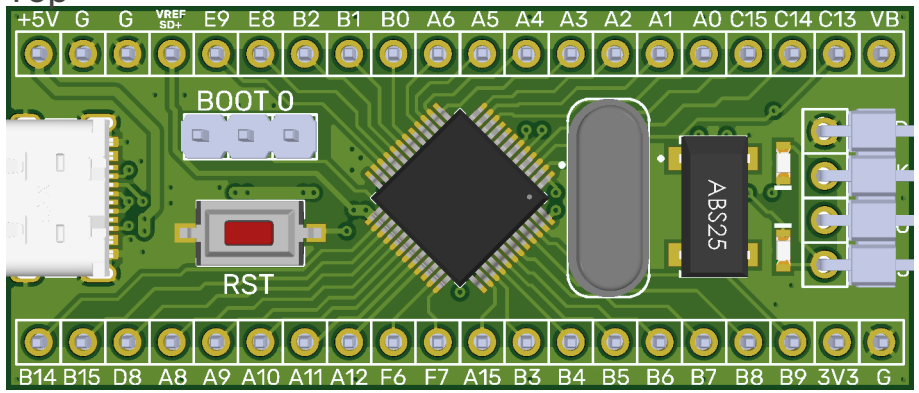

Bottom

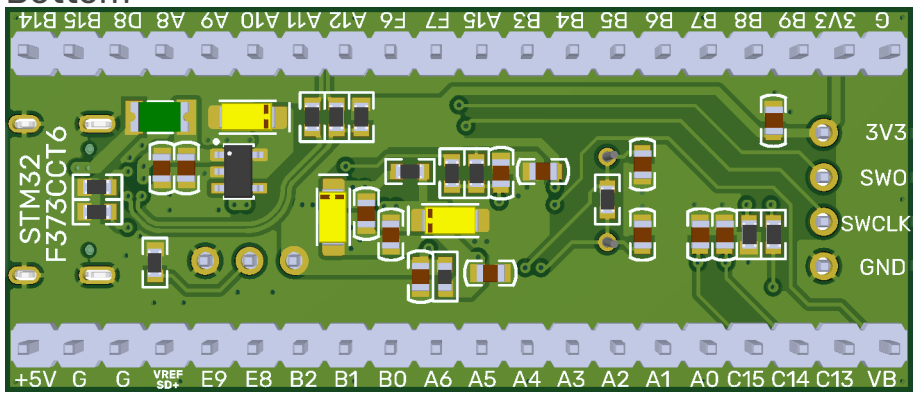

View from Top side (Scale 3)

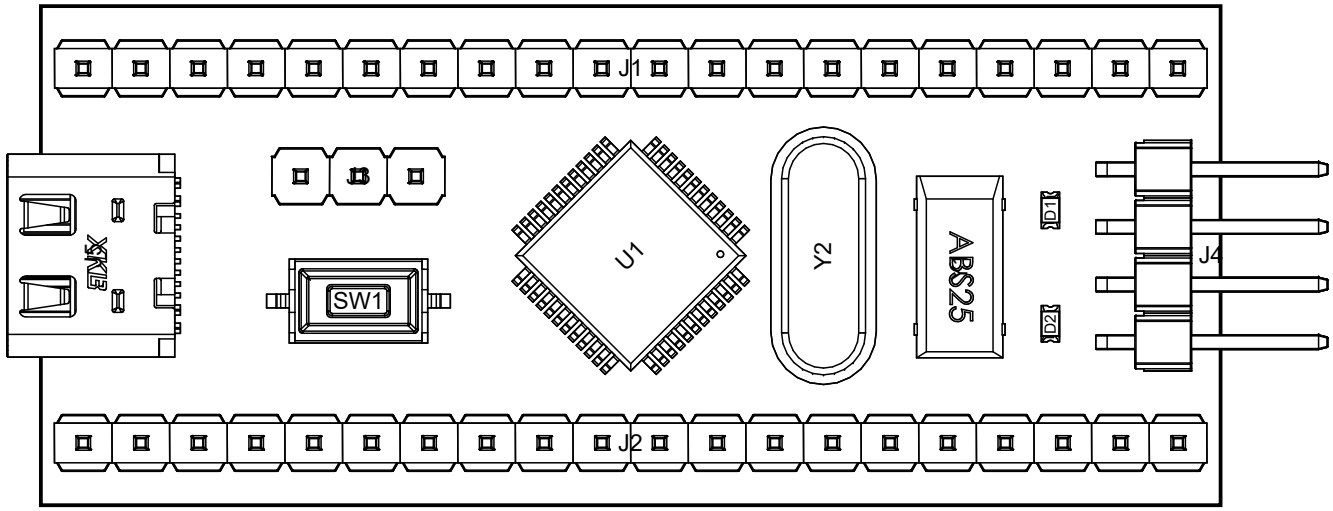

View from Top side

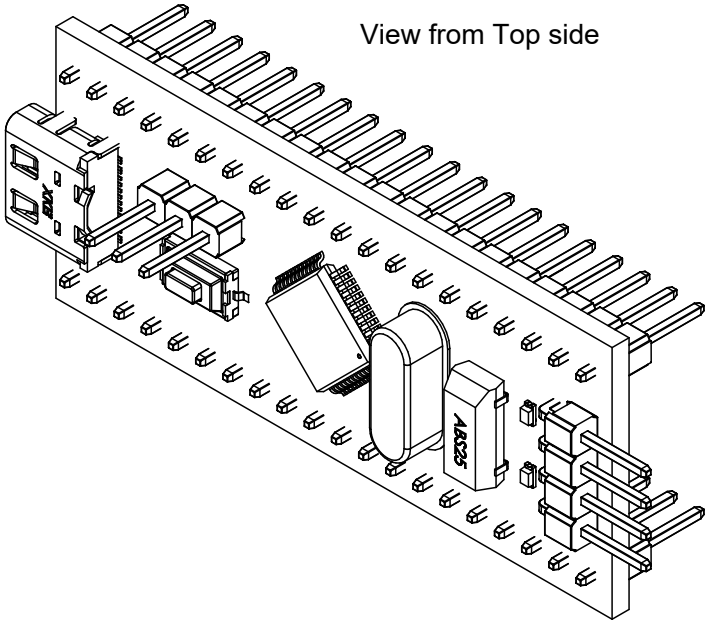

Top Layer

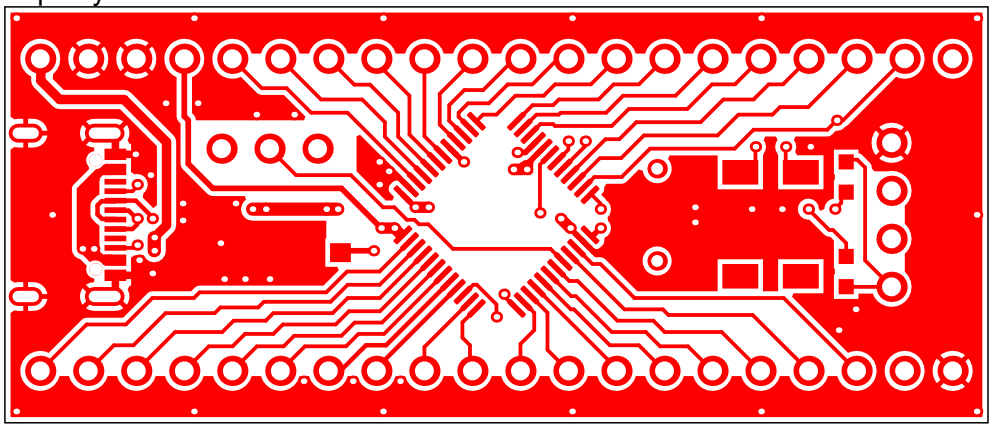

GND

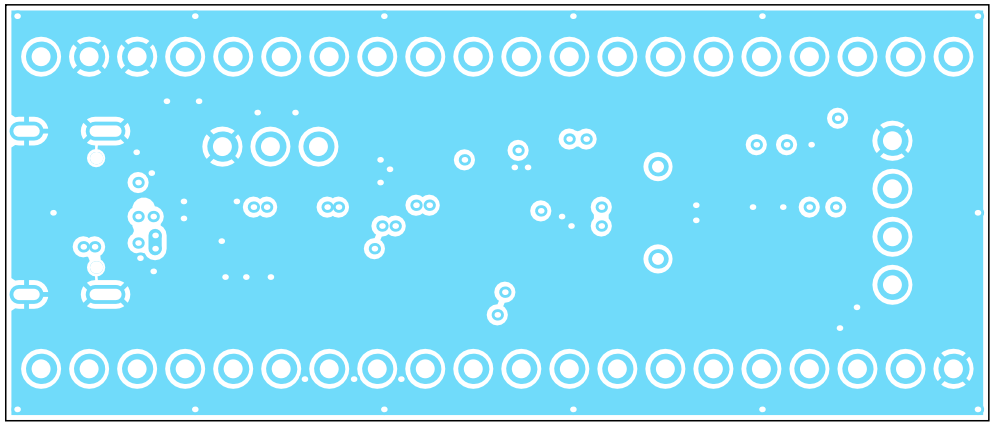

GND

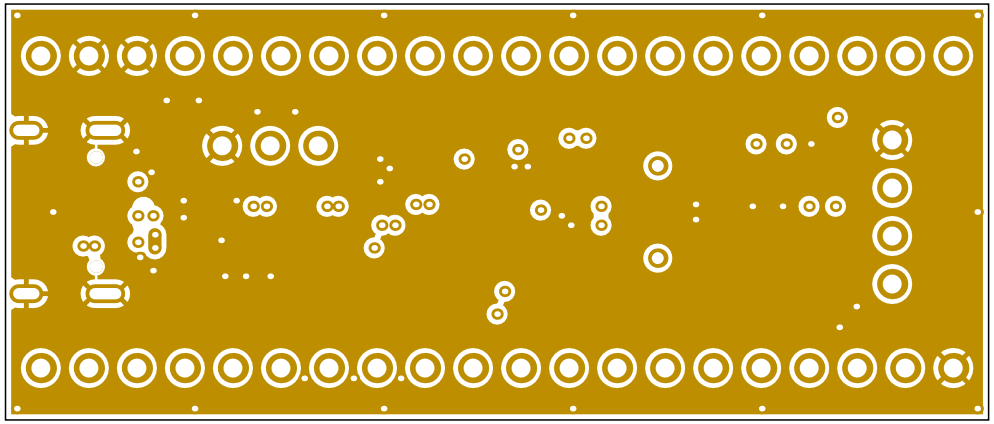

Bottom Layer

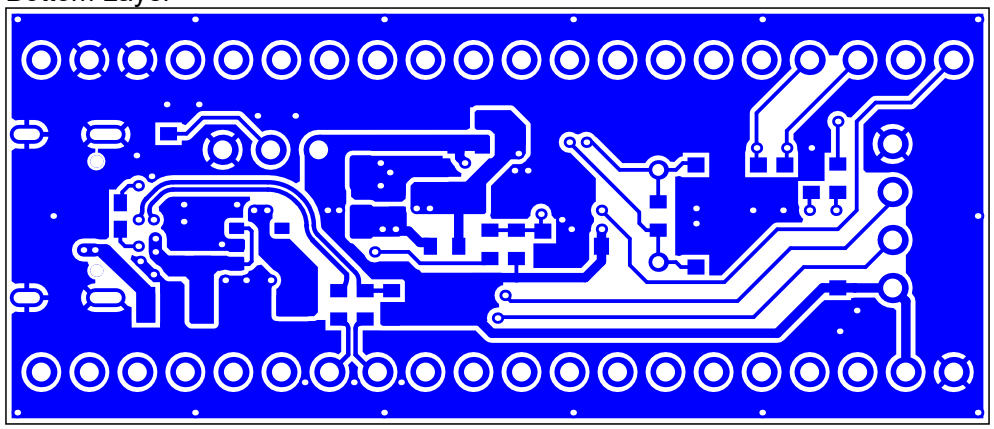

Top View

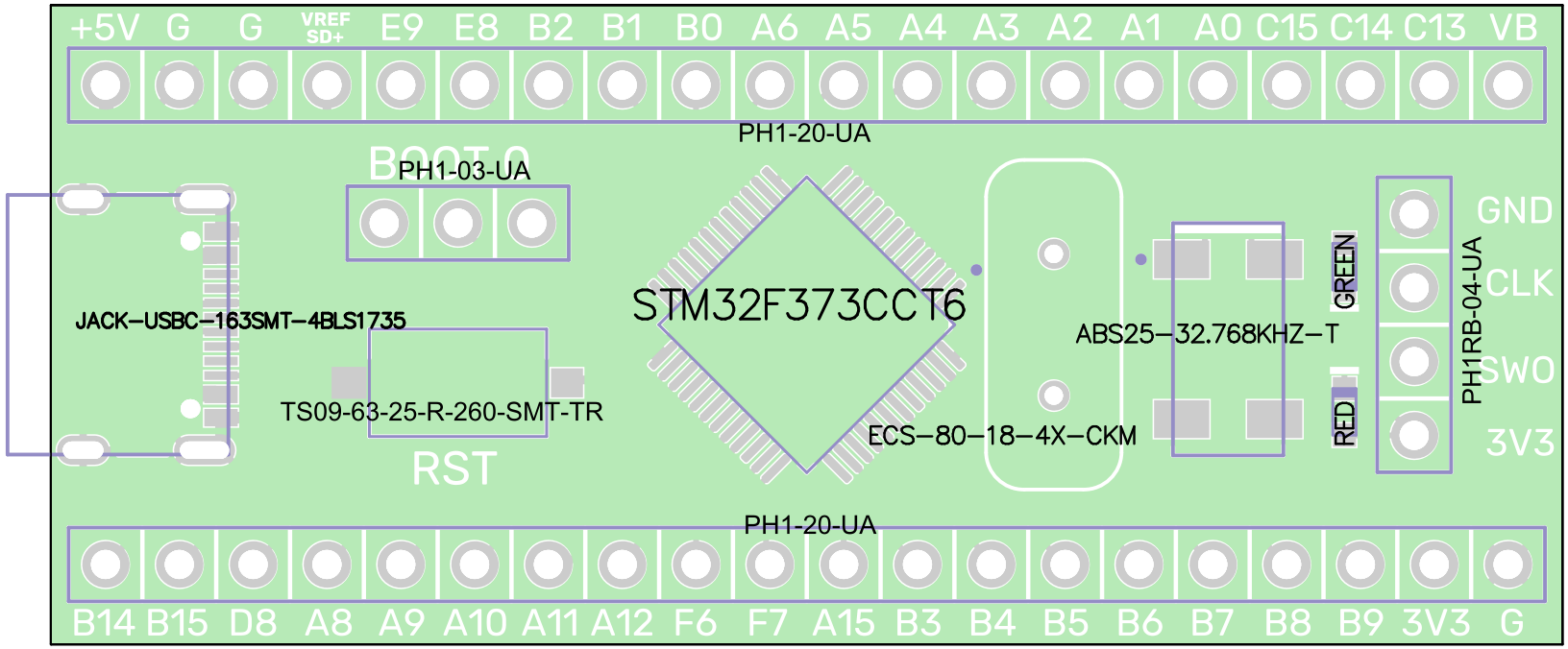

Bottom View

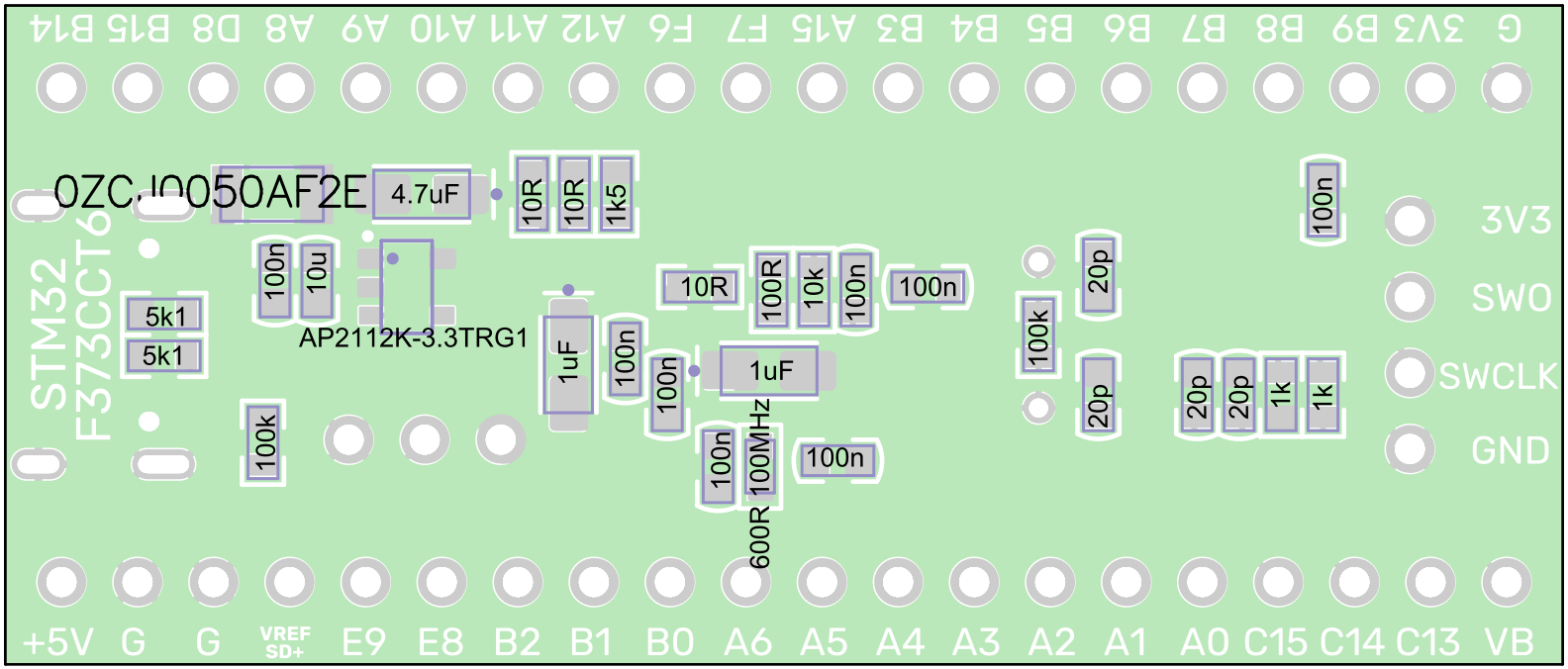

Top View

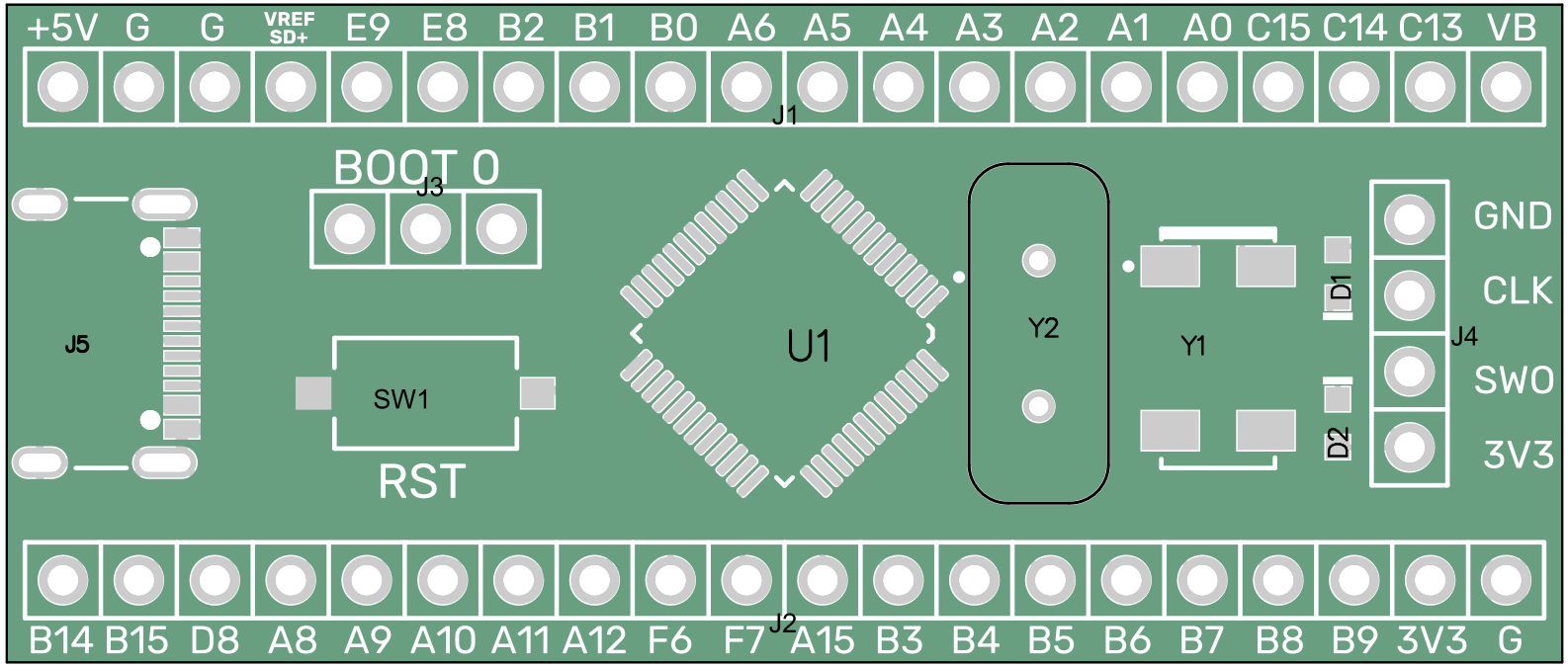

Bottom View

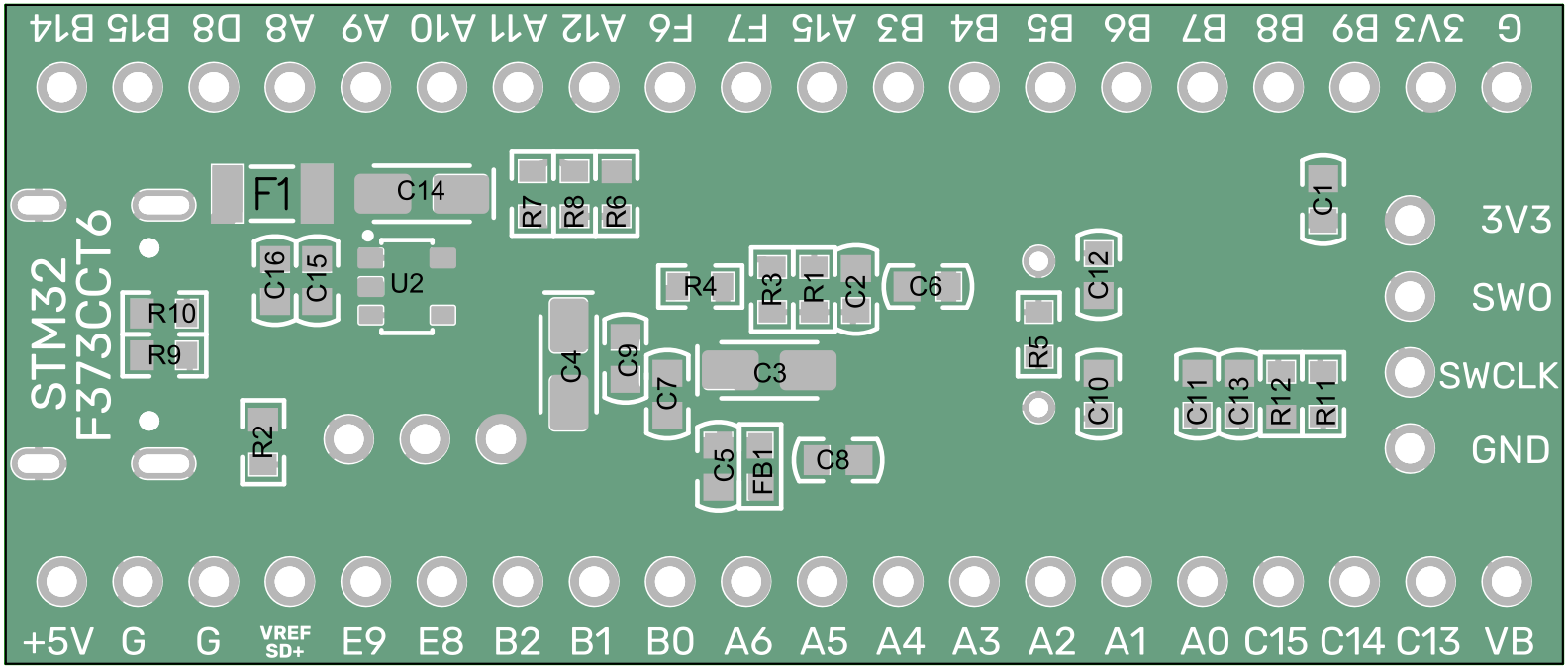

Layer Stack Legend

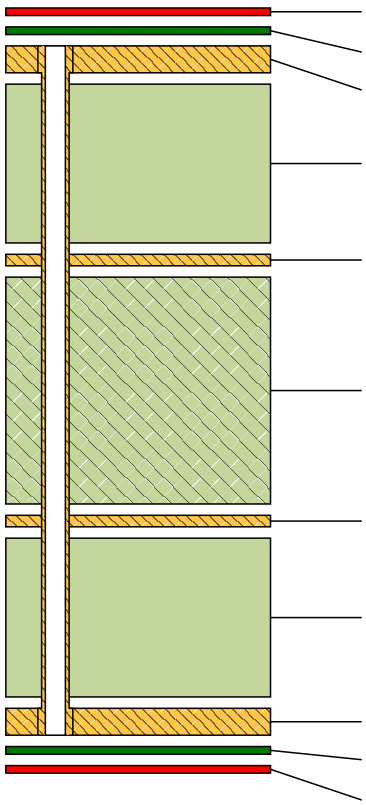

Material	Layer	Thickness	Dielectric Material	Type	Gerber	Dk
	Top Overlay			Legend	GTO	
Surface Material	Top Solder	0.01mm	Solder Resist	Solder Mask	GTS	3,5
Copper	Top Layer	0.04mm		Signal	GTL	
Prepreg		*0.21mm*	*PP-006*	*Dielectric*		*4,4*
CF-004	GND	0.02mm		Signal	G1	
		1.06mm	*FR-4*	*Dielectric*		*4,6*
CF-004	GND	0.02mm		Signal	G2	
Prepreg		*0.21mm*	*PP-006*	*Dielectric*		*4,4*
Copper	Bottom Layer	0.04mm		Signal	GBL	
Surface Material	Bottom Solder	0.01mm	Solder Resist	Solder Mask	GBS	3,5
	Bottom Overlay			Legend	GBO	

Total thickness: 1.61mm

Bill Of Materials

Line #	Designator	Comment	Quantity	Manufacturer Part Number 1	Case/Package	Description
1	C1, C2, C5, C6, C7, C8, C9, C16	100n	8	GCM188R71H104KA57J	0603	0.1 µF ±10% 50V Ceramic Capacitor X7R 0603 (1608 Metric)
2	C3, C4	1uF	2	T491A105K020AT	1206	1 µF Molded Tantalum Capacitors 20 V 1206 (3216 Metric) 9Ohm
3	C10, C11, C12, C13	20p	4	GCM1885C2A200JA16D	0603	20pF 100V C0G ±5% 0603 Multilayer Ceramic Capacitors MLCC - SMD/SMT ROHS
4	C14	4.7uF	1	T491A475K025AT	1206	4.7 µF Molded Tantalum Capacitors 25 V 1206 (3216 Metric) 6Ohm
5	C15	10u	1	GRM188C81C106MA73D	0603	10 µF ±20% 16V Ceramic Capacitor X6S 0603 (1608 Metric)
6	D1	GREEN	1	150060VS75003	0603	Led, Bright Green, 100Mcd, 572Nm Rohs Compliant: Yes
7	D2	RED	1	150060RS75003	0603	LED RED CLEAR 0603 SMD
8	F1	0ZCJ0050AF2E	1	0ZCJ0050AF2E	1206	Resettable Fuse, PPTC, 1206 (3216 Metric), 0ZCJ Series, 24 VDC, 500 mA, 1 A, 0.1 s
9	FB1	600R 100MHz	1	BLM18AG601SN1D	0603	600 Ohms @ 100 MHz 1 Ferrite Bead 0603 (1608 Metric) 500mA 380mOhm
10	J1, J2	PH1-20-UA	2	PH1-20-UA		Conn Unshrouded Header HDR 10 POS 2.54mm Solder RA Side Entry Thru-Hole Bag
11	J3	PH1-03-UA	1	PH1-03-UA		Conn Unshrouded Header HDR 3 POS 2.54mm Solder ST Top Entry Thru-Hole Bag
12	J4	PH1RB-04-UA	1	PH1RB-04-UA		PH1RB ROHS3Compliant COMMERCIAL UL CSA Connector Header 20mOhm -40C~105C 3A 250VAC
13	J5	JACK-USBC-163SMT-4BLS1735	1	JACK-USBC-163SMT-4BLS1735		Usb Type C Jack IPX7 SMT
14	R1	10k	1	AC0603FR-0710KL	0603	10 kOhms ±1% 0.1W, 1/10W Chip Resistor 0603 (1608 Metric) Automotive AEC-Q200, Moisture Resistant Thick Film
15	R2, R5	100k	2	RC0603DR-07100KL	0603	100 kOhms ±0.5% 0.1W, 1/10W Chip Resistor 0603 (1608 Metric) Moisture Resistant Thick Film
16	R3	100R	1	RC0603FR-10100RL	0603	100 Ohms ±1% 0.1W, 1/10W Chip Resistor 0603 (1608 Metric) Moisture Resistant Thick Film
17	R4, R7, R8	10R	3	RC0603FR-0710RL	0603	Res Thick Film 0603 10 Ohm 1% 0.1W(1/10W) ±200ppm/C Pad SMD T/R
18	R6	1k5	1	AC0603FR-071K5L	0603	1.5 kOhms ±1% 0.1W, 1/10W Chip Resistor 0603 (1608 Metric) Automotive AEC-Q200, Moisture Resistant Thick Film
19	R9, R10	5k1	2	RC0603FR-075K1L	0603	5.1 kOhms ±1% 0.1W, 1/10W Chip Resistor 0603 (1608 Metric) Moisture Resistant Thick Film
20	R11, R12	1k	2	RC0603FR-101KL	0603	1 kOhms ±1% 0.1W, 1/10W Chip Resistor 0603 (1608 Metric) Moisture Resistant Thick Film
21	SW1	TS09-63-25-R-260-SMT-TR	1	TS09-63-25-R-260-SMT-TR		Switch Tactile OFF (ON) SPST Rectangular Button Gull Wing 0.05A 12VDC 40000Cycles 2.6N SMD T/R
22	U1	STM32F373CCT6	1		LQFP	MCU, 32BIT, CORTEX-M4F, 72MHZ, LQFP-48
23	U2	AP2112K-3.3TRG1	1	AP2112K-3.3TRG1	SOT-23-5	AP2112 Series 0.6 A 3.3 V Fixed Output SMT LDO Linear Regulator - SOT23-5
24	Y1	ABS25-32.768KHZ-T	1	ABS25-32.768KHZ-T	SMD/SMT	Crystal, Plastic Molded 32.768Khz, 12.5F, 20Ppm-40+85C, 8 X 4 X 2.5 Rohs Compliant: Yes
25	Y2	ECS-80-18-4X-CKM	1	ECS-80-18-4X-CKM	HC-49/US	8 MHz ±10ppm Crystal 18pF 80 Ohms HC-49/US