STM32F373 Blue Pill

Board Revision: A

05.05.2026

Variant: [No Variations]

RELEASED 5-MAY-2026

Table of contents

Sheet 1: [01]-COVER PAGE.SchDoc

Sheet 2: [02]-STM32F373BluePill.SchDoc

Revision

05.05.2026	Initial Release.

DESIGN CONSIDERATIONS

DESIGN NOTE:
informational design notes .

DESIGN NOTE:
cautionary design notes.

DESIGN NOTE:
debug notes.

DESIGN NOTE:
critical design notes.

LAYOUT NOTE:
critical layout guidelines.

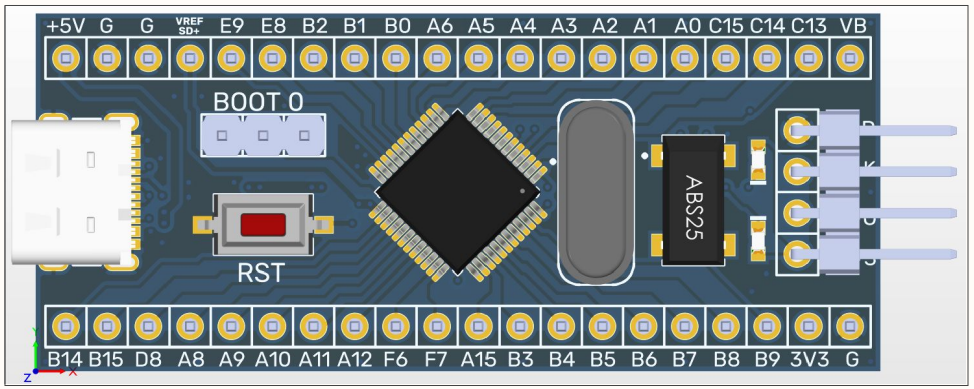

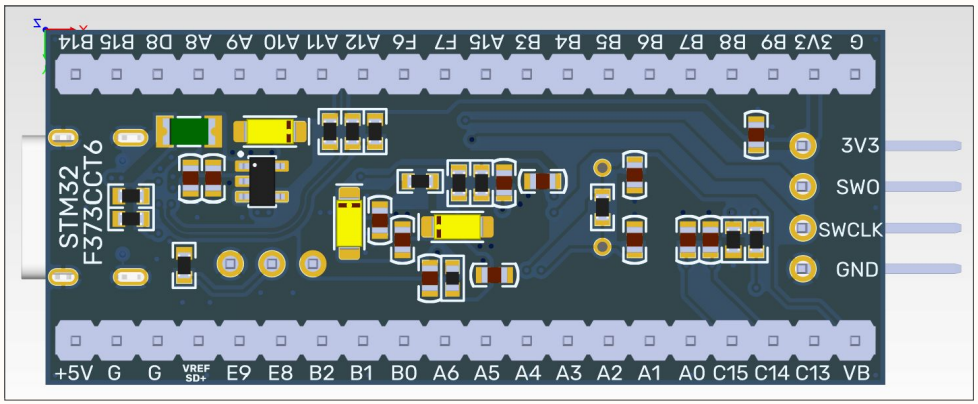

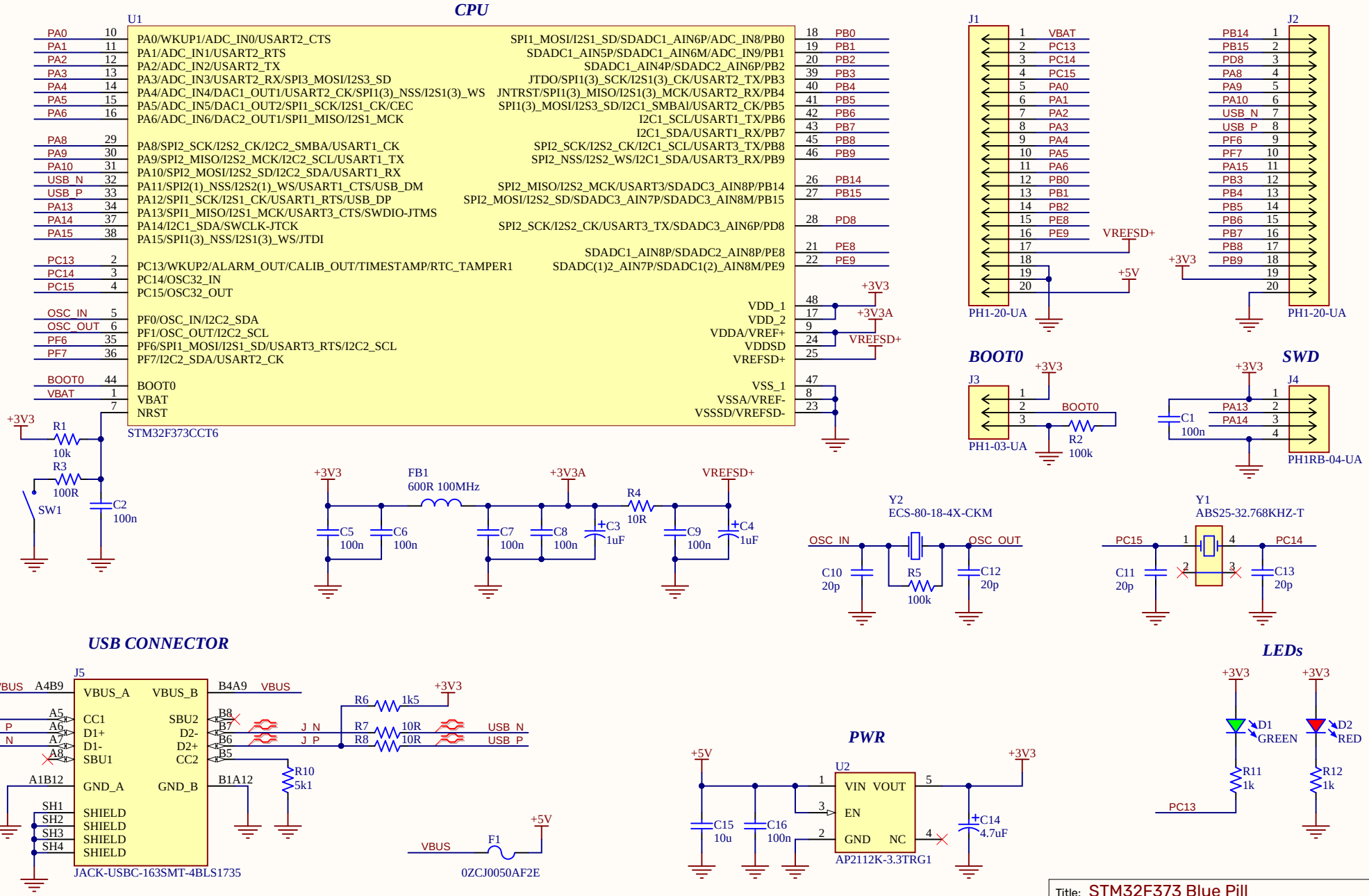
CPU
U1
STM32F373CCT6
PA0/WKUP1/ADC_IN0/USART2_CTS
PA1/ADC_IN1/USART2_RTS
PA2/ADC_IN2/USART2_TX
PA3/ADC_IN3/USART2_RX/SPI3_MOSI/I2S3_SD
PA4/ADC_IN4/DAC1_OUT1/USART2_CK/SPI1(3)_NSS/I2S1(3)_WS
PA5/ADC_IN5/DAC1_OUT2/SPI1_SCK/I2S1_CK/CEC
PA6/ADC_IN6/DAC2_OUT1/SPI1_MISO/I2S1_MCK
PA8/SPI2_SCK/I2S2_CK/I2C2_SMBA/USART1_CK
PA9/SPI2_MISO/I2S2_MCK/I2C2_SCL/USART1_TX
PA10/SPI2_MOSI/I2S2_SD/I2C2_SDA/USART1_RX
PA11/SPI2(1)_NSS/I2S2(1)_WS/USART1_CTS/USB_DM
PA12/SPI1_SCK/I2S1_CK/USART1_RTS/USB_DP
PA13/SPI1_MISO/I2S1_MCK/USART3_CTS/SWDIO-JTMS
PA14/I2C1_SDA/SWCLK-JTCK
PA15/SPI1(3)_NSS/I2S1(3)_WS/JTDI
PC13/WKUP2/ALARM_OUT/CALIB_OUT/TIMESTAMP/RTC_TAMPER1
PC14/OSC32_IN
PC15/OSC32_OUT
PF0/OSC_IN/I2C2_SDA
PF1/OSC_OUT/I2C2_SCL
PF6/SPI1_MOSI/I2S1_SD/USART3_RTS/I2C2_SCL
PF7/I2C2_SDA/USART2_CK
BOOT0
VBAT
NRST
SPI1_MOSI/I2S1_SD/SDADC1_AIN6P/ADC_IN8/PB0
SDADC1_AIN5P/SDADC1_AIN6M/ADC_IN9/PB1
SDADC1_AIN4P/SDADC2_AIN6P/PB2
JTDO/SPI1(3)_SCK/I2S1(3)_CK/USART2_TX/PB3
JNTRST/SPI1(3)_MISO/I2S1(3)_MCK/USART2_RX/PB4
SPI1(3)_MOSI/I2S3_SD/I2C1_SMBAl/USART2_CK/PB5
I2C1_SCL/USART1_TX/PB6
I2C1_SDA/USART1_RX/PB7
SPI2_SCK/I2S2_CK/I2C1_SCL/USART3_TX/PB8
SPI2_NSS/I2S2_WS/I2C1_SDA/USART3_RX/PB9
SPI2_MISO/I2S2_MCK/USART3/SDADC3_AIN8P/PB14
SPI2_MOSI/I2S2_SD/SDADC3_AIN7P/SDADC3_AIN8M/PB15
SPI2_SCK/I2S2_CK/USART3_TX/SDADC3_AIN6P/PD8
SDADC1_AIN8P/SDADC2_AIN8P/PE8
SDADC(1)2_AIN7P/SDADC1(2)_AIN8M/PE9
VDD_1
VDD_2
VDDA/VREF+
VDDSD
VREFSD+
VSS_1
VSSA/VREF-
VSSSD/VREFSD-
+3V3
+3V3A
VREFSD+
J1
PH1-20-UA
J2
PH1-20-UA
BOOT0
J3
PH1-03-UA
R2
100k
SWD
J4
PH1RB-04-UA
C1
100n
R1
10k
R3
100R
SW1
C2
100n
FB1
600R 100MHz
C5
100n
C6
100n
C7
100n
C8
100n
C3
1uF
R4
10R
C9
100n
C4
1uF
Y2
ECS-80-18-4X-CKM
OSC_IN
OSC_OUT
C10
20p
R5
100k
C12
20p
Y1
ABS25-32.768KHZ-T
PC15
PC14
C11
20p
C13
20p
USB CONNECTOR
J5
JACK-USBC-163SMT-4BLS1735
VBUS_A
VBUS_B
CC1
D1+
D1-
SBU1
SBU2
D2-
D2+
CC2
GND_A
GND_B
SHIELD
VBUS
A4B9
B4A9
A5
A6
A7
A8
B8
B7
B6
B5
A1B12
B1A12
J_P
J_N
R6
1k5
R7
10R
R8
10R
USB_N
USB_P
R9
5k1
R10
5k1
F1
0ZCJ0050AF2E
PWR
U2
AP2112K-3.3TRG1
VIN
VOUT
EN
GND
NC
C15
10u
C16
100n
C14
4.7uF
LEDs
D1
GREEN
D2
RED
R11
1k
R12
1k
PC13
Title: STM32F373 Blue Pill
Variant: [No Variations]
Revision: A
Date: 05.05.2026 Time: 00:00:00
Sheet: 2 of 2