STM32F373 Blue Pill

Board Revision: A

06.05.2026

Variant: [No Variations]

RELEASED 5-MAY-2026

Table of contents

Sheet 1: [01]-COVER PAGE.SchDoc

Sheet 2: [02]-STLinkV2_1.SchDoc

Revision

22.03.2026	Initial Release. Revision 1.0

DESIGN CONSIDERATIONS

DESIGN NOTE:
informational design notes .

DESIGN NOTE:
cautionary design notes.

DESIGN NOTE:
debug notes.

DESIGN NOTE:
critical design notes.

LAYOUT NOTE:
critical layout guidelines.

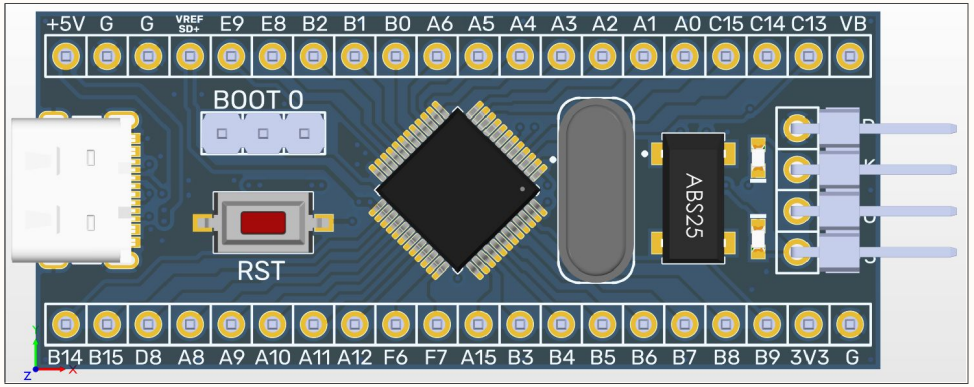

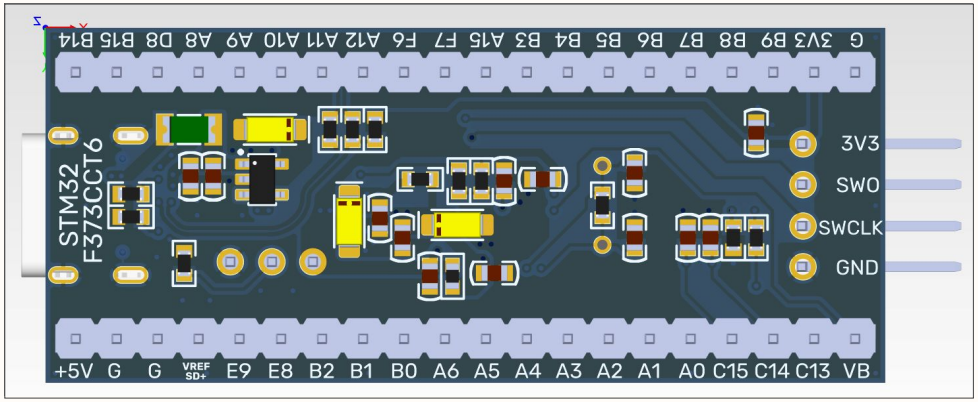

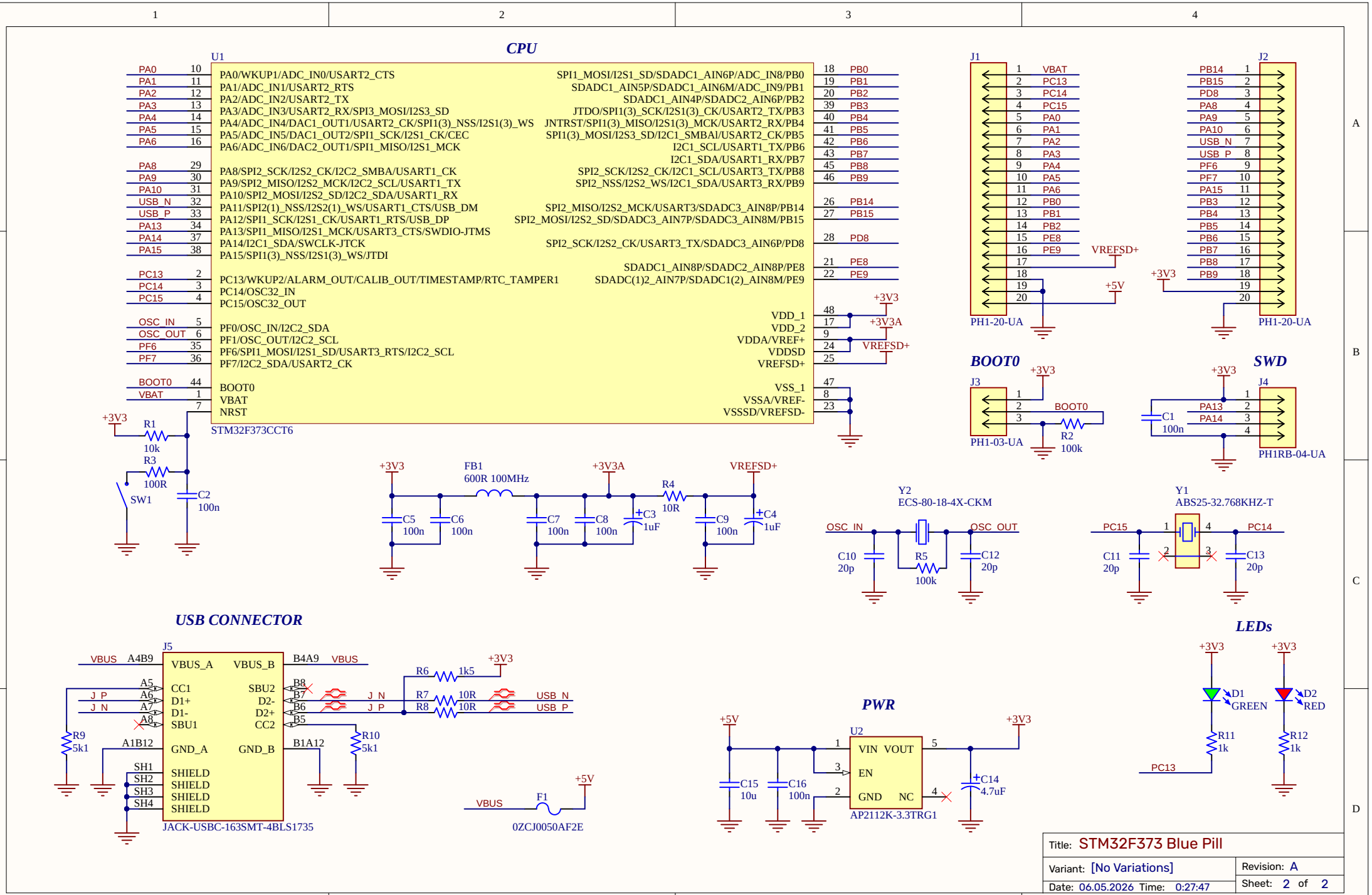
CPU
U1
PA0/WKUP1/ADC_IN0/USART2_CTS
PA1/ADC_IN1/USART2_RTS
PA2/ADC_IN2/USART2_TX
PA3/ADC_IN3/USART2_RX/SPI3_MOSI/I2S3_SD
PA4/ADC_IN4/DAC1_OUT1/USART2_CK/SPI1(3)_NSS/I2S1(3)_WS
PA5/ADC_IN5/DAC1_OUT2/SPI1_SCK/I2S1_CK/CEC
PA6/ADC_IN6/DAC2_OUT1/SPI1_MISO/I2S1_MCK
PA8/SPI2_SCK/I2S2_CK/I2C2_SMBA/USART1_CK
PA9/SPI2_MISO/I2S2_MCK/I2C2_SCL/USART1_TX
PA10/SPI2_MOSI/I2S2_SD/I2C2_SDA/USART1_RX
PA11/SPI2(1)_NSS/I2S2(1)_WS/USART1_CTS/USB_DM
PA12/SPI1_SCK/I2S1_CK/USART1_RTS/USB_DP
PA13/SPI1_MISO/I2S1_MCK/USART3_CTS/SWDIO-JTMS
PA14/I2C1_SDA/SWCLK-JTCK
PA15/SPI1(3)_NSS/I2S1(3)_WS/JTDI
PC13/WKUP2/ALARM_OUT/CALIB_OUT/TIMESTAMP/RTC_TAMPER1
PC14/OSC32_IN
PC15/OSC32_OUT
PF0/OSC_IN/I2C2_SDA
PF1/OSC_OUT/I2C2_SCL
PF6/SPI1_MOSI/I2S1_SD/USART3_RTS/I2C2_SCL
PF7/I2C2_SDA/USART2_CK
BOOT0
VBAT
NRST
SPI1_MOSI/I2S1_SD/SDADC1_AIN6P/ADC_IN8/PB0
SDADC1_AIN5P/SDADC1_AIN6M/ADC_IN9/PB1
SDADC1_AIN4P/SDADC2_AIN6P/PB2
JTDO/SPI1(3)_SCK/I2S1(3)_CK/USART2_TX/PB3
JNTRST/SPI1(3)_MISO/I2S1(3)_MCK/USART2_RX/PB4
SPI1(3)_MOSI/I2S3_SD/I2C1_SMBAl/USART2_CK/PB5
I2C1_SCL/USART1_TX/PB6
I2C1_SDA/USART1_RX/PB7
SPI2_SCK/I2S2_CK/I2C1_SCL/USART3_TX/PB8
SPI2_NSS/I2S2_WS/I2C1_SDA/USART3_RX/PB9
SPI2_MISO/I2S2_MCK/USART3/SDADC3_AIN8P/PB14
SPI2_MOSI/I2S2_SD/SDADC3_AIN7P/SDADC3_AIN8M/PB15
SPI2_SCK/I2S2_CK/USART3_TX/SDADC3_AIN6P/PD8
SDADC1_AIN8P/SDADC2_AIN8P/PE8
SDADC(1)2_AIN7P/SDADC1(2)_AIN8M/PE9
VDD_1
VDD_2
VDDA/VREF+
VDDSD
VREFSD+
VSS_1
VSSA/VREF-
VSSSD/VREFSD-
STM32F373CCT6
J1
PH1-20-UA
J2
PH1-20-UA
BOOT0
J3
PH1-03-UA
SWD
J4
PH1RB-04-UA
R1 10k
R3 100R
SW1
C2 100n
FB1 600R 100MHz
C5 100n
C6 100n
C7 100n
C8 100n
C3 1uF
R4 10R
C9 100n
C4 1uF
Y2 ECS-80-18-4X-CKM
C10 20p
R5 100k
C12 20p
Y1 ABS25-32.768KHZ-T
C11 20p
C13 20p
USB CONNECTOR
J5
JACK-USBC-163SMT-4BLS1735
R6 1k5
R7 10R
R8 10R
R9 5k1
R10 5k1
F1
0ZCJ0050AF2E
PWR
U2
AP2112K-3.3TRG1
C15 10u
C16 100n
C14 4.7uF
LEDs
D1 GREEN
D2 RED
R11 1k
R12 1k
Title: STM32F373 Blue Pill
Variant: [No Variations]
Revision: A
Date: 06.05.2026 Time: 0:27:47
Sheet: 2 of 2