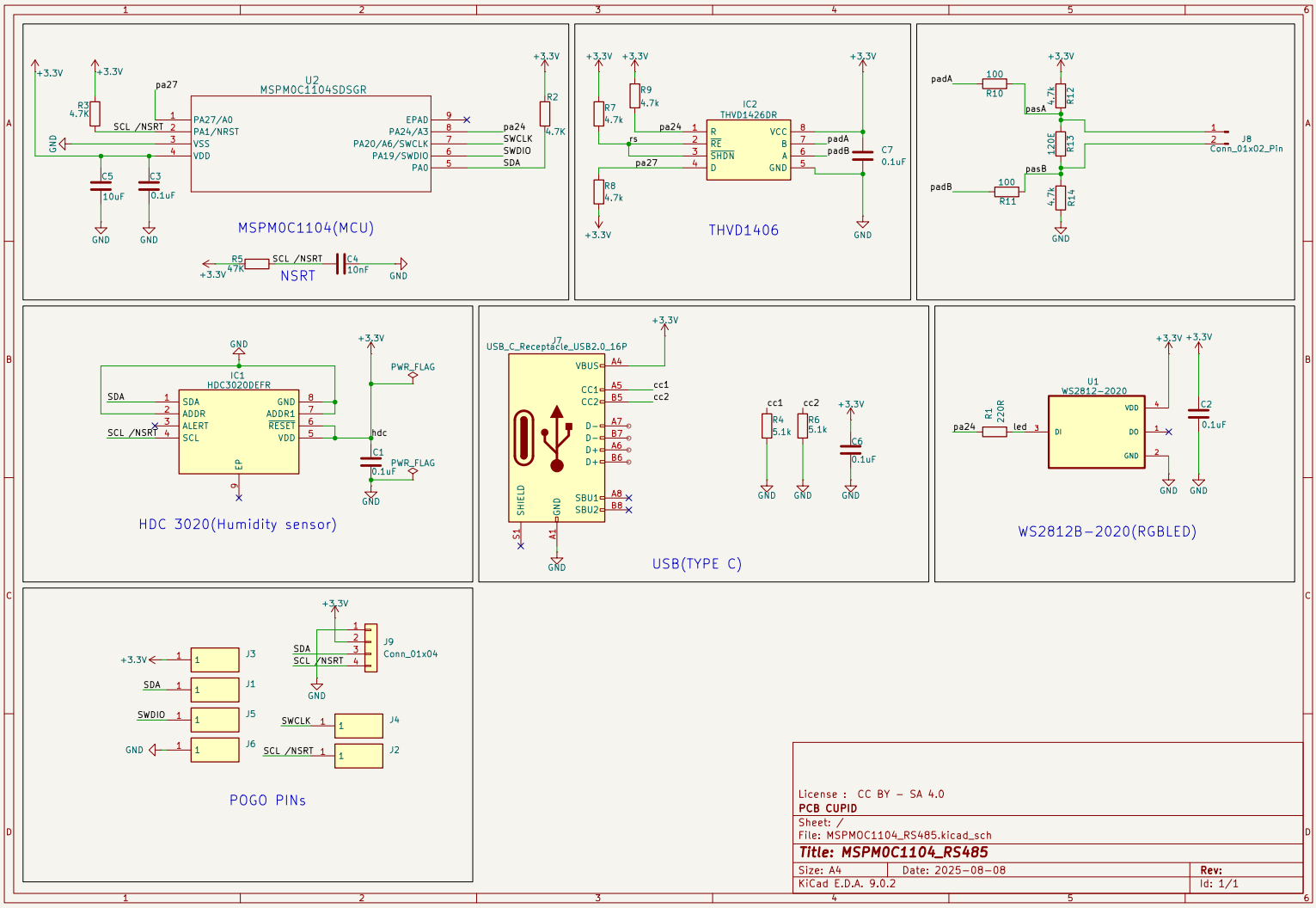

License : CC BY - SA 4.0

PCB CUPID

Sheet: /

File: MSPM0C1104_RS485.kicad_sch

Title: MSPM0C1104_RS485

Size: A4	Date: 2025-08-08	**Rev:**
KiCad E.D.A. 9.0.2		Id: 1/1