Higher Diploma in Computer Science, SETU

Developing the CareModel Hub Web Application for Implementing the Kidney Failure Risk Equation

Presenter: **Peter Chuk**

- *Chronic Kidney Disease (CKD), also referred to as Chronic Renal Disease(CRD), affects approximately 12% of the Irish population. Current detection rates remain around 40%, and while only ~3% of CRD patients progress to End Stage Renal Disease (ESRD), the absolute number of patients requiring secondary care services, including in-centre dialysis, continues to rise.*
- *The majority of CRD patients can be effectively managed within primary care settings, provided that high-risk individuals are identified early.*
- *The Kidney Failure Risk Equation (KFRE) predicts 5-year progression to ESRD using age, sex, eGFR, and ACR. Recommended by NICE NG203, KFRE enhances risk stratification, supports timely intervention, improves resource allocation, and reduces unnecessary secondary referrals.*

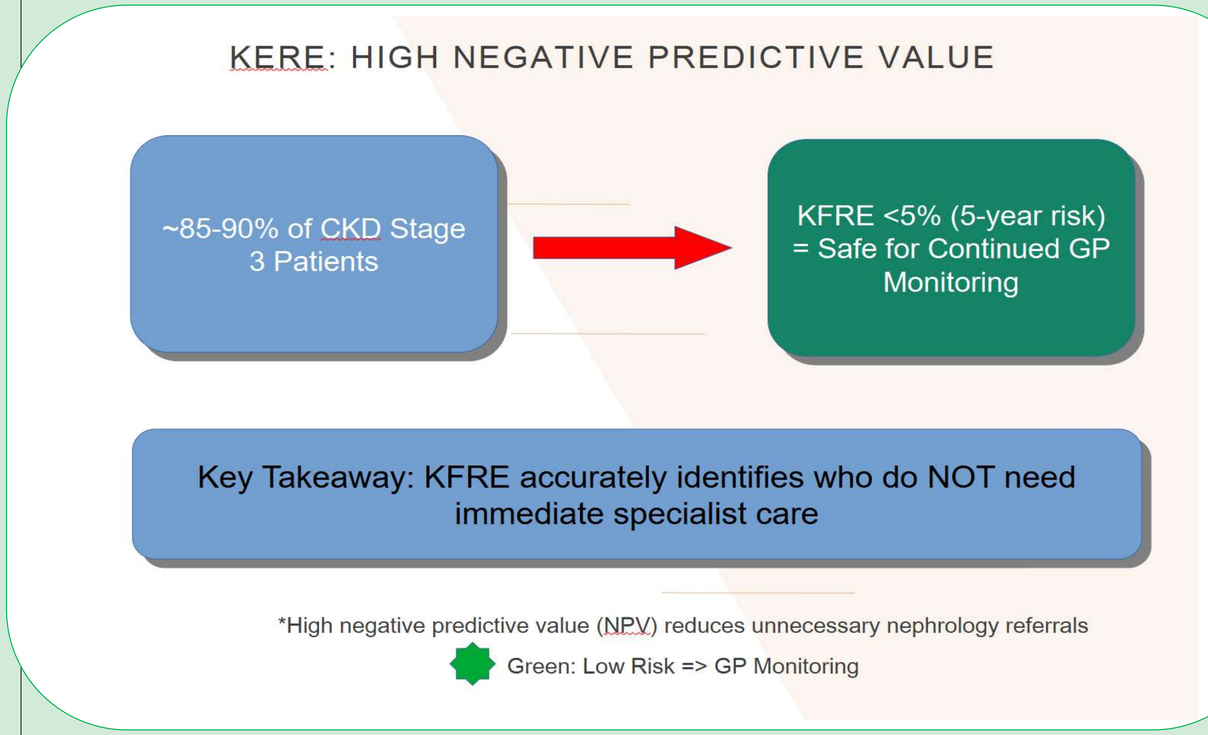

Regulatory & Governance

ISO 13485 (QMS) – Defines requirements for a structured Quality Management System for medical device software.

ISO 14971 (Risk) – Establishes a formal framework for identifying, analysing, and mitigating clinical and technical risks.

ISO 27001 (InfoSec) – Specifies controls for managing information security and protecting sensitive data.

MDR / IVDR – EU regulations governing the safety, performance, and clinical validation of medical and in-vitro diagnostic devices.

GDPR & NIS2 – European regulations ensuring lawful data protection and strengthened Cybersecurity resilience.

2. System Architecture Overview

Layered microservice architecture:

- React Frontend (UI Layer)
- Node.js (Hapi + TypeScript) Backend
- FastAPI Python Microservice (KFRE Engine)
- MongoDB Atlas Persistence

Design principles: modularity, security, fault isolation, scalability.

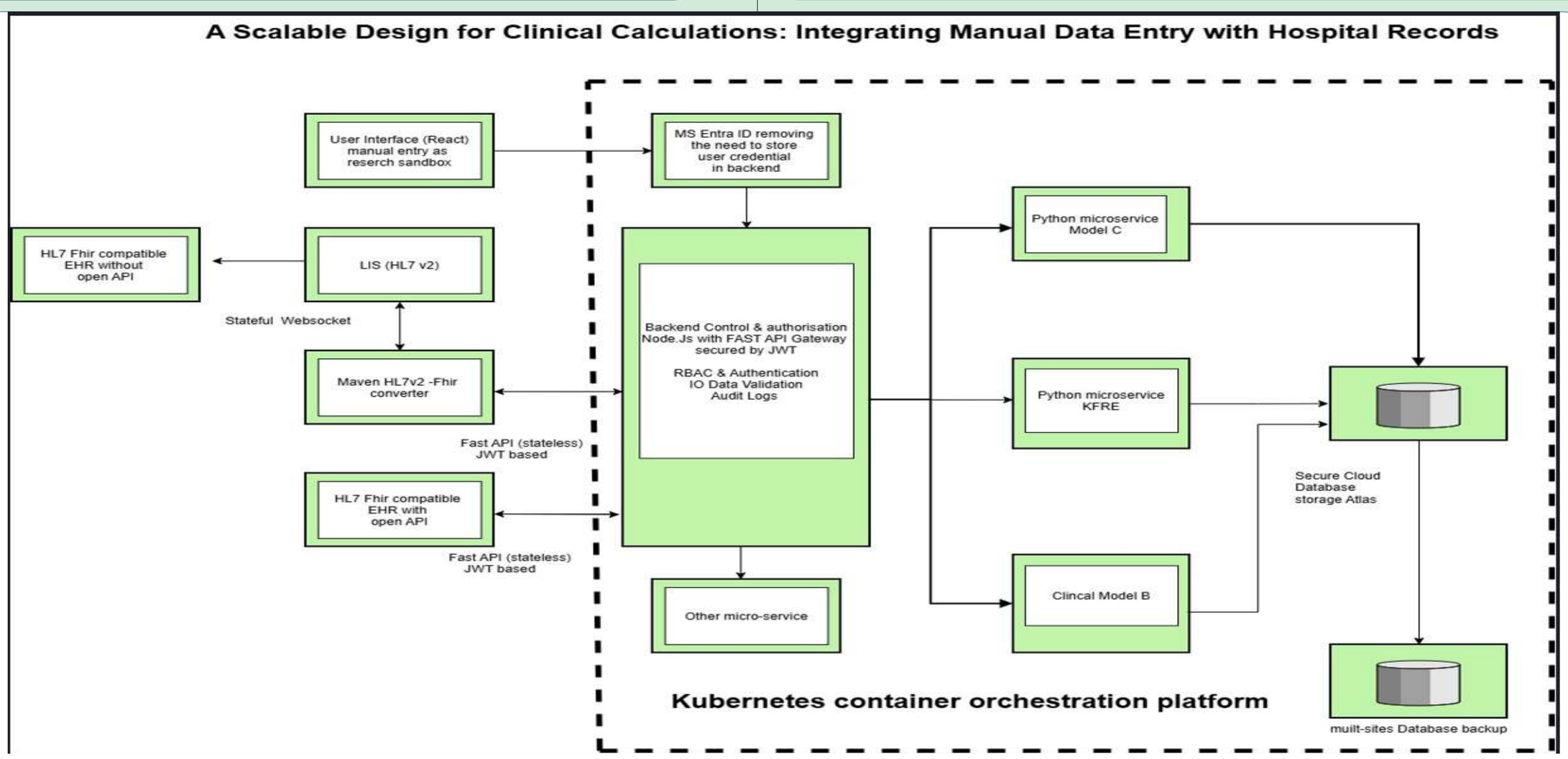

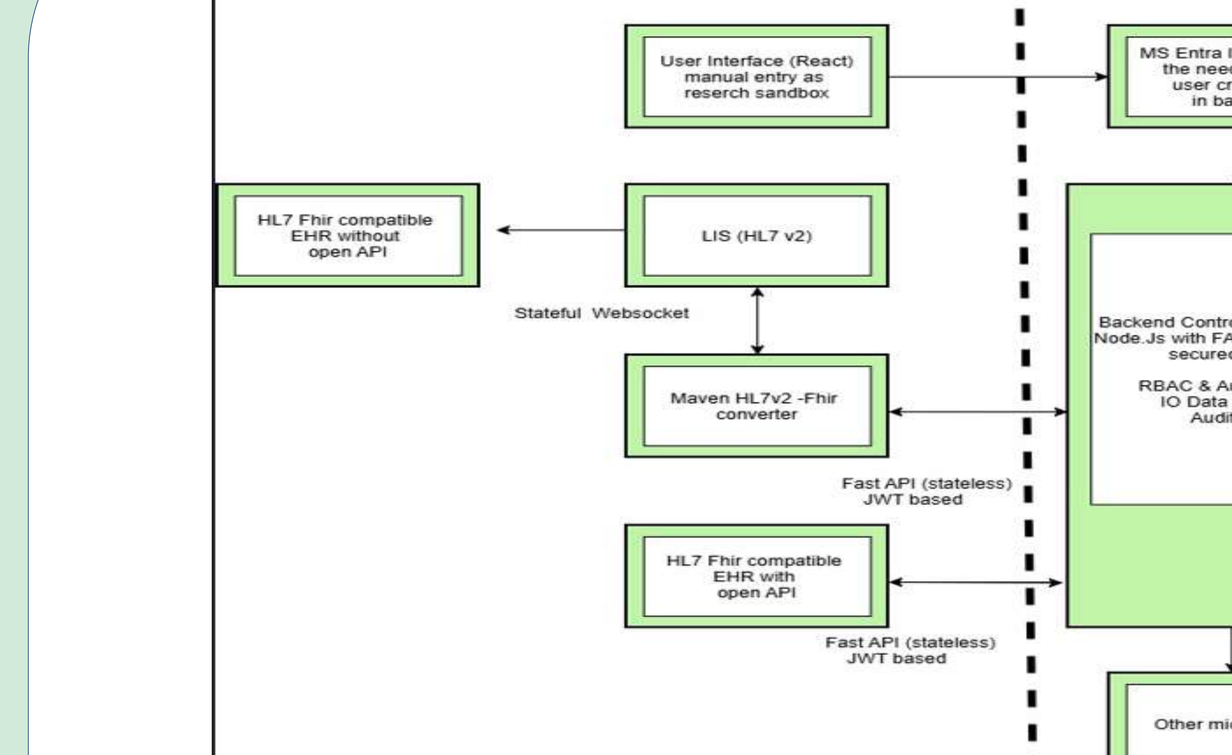

Scan QR code: https://pccork.github.io/caremodelhub/

email	Password	Role
testuser1@caremodelhub.com	TestUserPass123!	user

Contact Information for Presenter:

- peter.chuk@hse.ie
- https://github.com/pccork
- https://pccork.github.io/caremodelhub/

ACKNOWLEDGMENT

Dr Aidan Ryan, Consultant Chemical Pathologist, CUH
Dr. Sean Costelloe Consultant Clinical Biochemist, CUH
Biochemistry Laboratory Management Team, CUH
Lecturing Team, Department of Computer Science, SETU
Dr. Anita Kealy, project supervisor, SETU