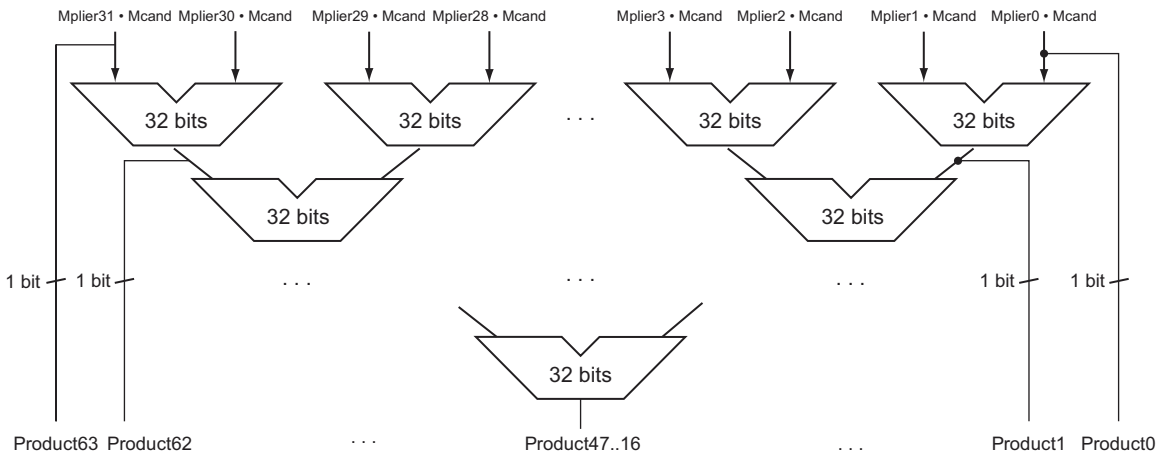

FIGURE 3.7 Fast multiplication hardware. Rather than use a single 32-bit adder 31 times, this hardware "unrolls the loop" to use 31 adders and then organizes them to minimize delay.

for multiplications by powers of 2. With much more hardware we can do the adds in **parallel**, and do them much faster.

Hardware/Software Interface

Software can use the multiply-high instructions to check for overflow from 32-bit multiplication. There is no overflow for 32-bit unsigned multiplication if `mulhu`'s result is zero. There is no overflow for 32-bit signed multiplication if all of the bits in `mulh`'s result are copies of the sign bit of `mul`'s result.

3.4 Division

Divide et impera.

Latin for "Divide and rule," ancient political maxim cited by Machiavelli, 1532

dividend A number being divided.

The reciprocal operation of multiply is divide, an operation that is even less frequent and even quirkier. It even offers the opportunity to perform a mathematically invalid operation: dividing by 0.

Let's start with an example of long division using decimal numbers to recall the names of the operands and the division algorithm from grammar school. For

divisor A number that the dividend is divided by.

quotient The primary result of a division; a number that when multiplied by the divisor and added to the remainder produces the dividend.

remainder The secondary result of a division; a number that when added to the product of the quotient and the divisor produces the dividend.

reasons similar to those in the previous section, we limit the decimal digits to just 0 or 1. The example is dividing $1{,}001{,}010_{ten}$ by 1000_{ten}:

```
                    1001ten        Quotient
Divisor 1000ten ) 1001010ten       Dividend
                 -1000
                    10
                    101
                    1010
                   -1000
                      10ten        Remainder
```

Divide's two operands, called the **dividend** and **divisor**, and the result, called the **quotient**, are accompanied by a second result, called the **remainder**. Here is another way to express the relationship between the components:

$$\text{Dividend} = \text{Quotient} \times \text{Divisor} \quad \text{Remainder}$$

where the remainder is smaller than the divisor. Occasionally, programs use the divide instruction simply to get the remainder, ignoring the quotient.

The basic division algorithm from grammar school tries to see how big a number can be subtracted, creating a digit of the quotient on each attempt. Our carefully selected decimal example uses just the numbers 0 and 1, so it's easy to figure out how many times the divisor goes into the portion of the dividend: it's either 0 times or 1 time. Binary numbers contain only 0 or 1, so binary division is restricted to these two choices, thereby simplifying binary division.

Let's assume that both the dividend and the divisor are positive and hence the quotient and the remainder are nonnegative. The division operands and both results are 32-bit values, and we will ignore the sign for now.

A Division Algorithm and Hardware

Figure 3.8 shows hardware to mimic our grammar school algorithm. We start with the 32-bit Quotient register set to 0. Each iteration of the algorithm needs to move the divisor to the right one digit, so we start with the divisor placed in the left half of the 64-bit Divisor register and shift it right 1 bit each step to align it with the dividend. The Remainder register is initialized with the dividend.

Figure 3.9 shows three steps of the first division algorithm. Unlike a human, the computer isn't smart enough to know in advance whether the divisor is smaller than the dividend. It must first subtract the divisor in step 1; remember that this is how we performed comparison. If the result is positive, the divisor was smaller or equal to the dividend, so we generate a 1 in the quotient (step 2a). If the result is negative, the next step is to restore the original value by adding the divisor back to the remainder and generate a 0 in the quotient (step 2b). The divisor is shifted

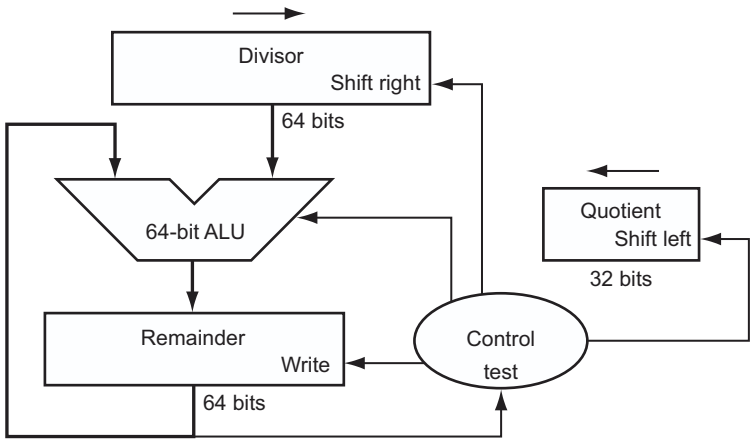

FIGURE 3.8 First version of the division hardware. The Divisor register, ALU, and Remainder register are all 64 bits wide, with only the Quotient register being 32 bits. The 32-bit divisor starts in the left half of the Divisor register and is shifted right 1 bit each iteration. The remainder is initialized with the dividend. Control decides when to shift the Divisor and Quotient registers and when to write the new value into the Remainder register.

right, and then we iterate again. The remainder and quotient will be found in their namesake registers after the iterations complete.

EXAMPLE

A Divide Algorithm

ANSWER

Using a 4-bit version of the algorithm to save pages, let's try dividing 7_{ten} by 2_{ten}, or $0000\ 0111_{two}$ by 0010_{two}.

Figure 3.10 shows the value of each register for each of the steps, with the quotient being 3_{ten} and the remainder 1_{ten}. Notice that the test in step 2 of whether the remainder is positive or negative simply checks whether the sign bit of the Remainder register is a 0 or 1. The surprising requirement of this algorithm is that it takes $n + 1$ steps to get the proper quotient and remainder.

This algorithm and hardware can be refined to be faster and cheaper. The speed-up comes from shifting the operands and the quotient simultaneously with the subtraction. This refinement halves the width of the adder and registers by noticing

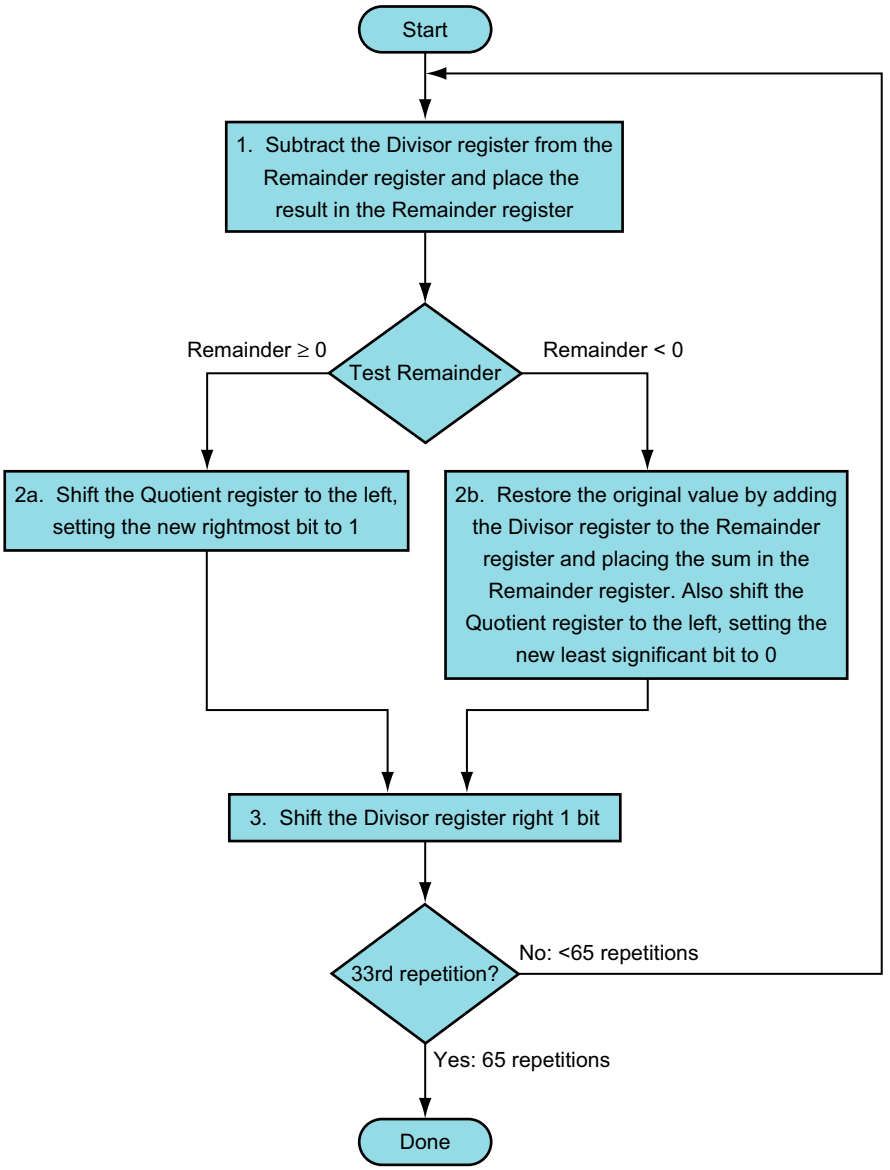

FIGURE 3.9 A division algorithm, using the hardware in Figure 3.8. If the remainder is positive, the divisor did go into the dividend, so step 2a generates a 1 in the quotient. A negative remainder after step 1 means that the divisor did not go into the dividend, so step 2b generates a 0 in the quotient and adds the divisor to the remainder, thereby reversing the subtraction of step 1. The final shift, in step 3, aligns the divisor properly, relative to the dividend for the next iteration. These steps are repeated 33 times.

Iteration	Step	Quotient	Divisor	Remainder
0	Initial values	0000	0010 0000	0000 0111
1	1: Rem = Rem – Div	0000	0010 0000	1110 0111
	2b: Rem < 0 ⟹ +Div, SLL Q, Q0 = 0	0000	0010 0000	0000 0111
	3: Shift Div right	0000	0001 0000	0000 0111
2	1: Rem = Rem – Div	0000	0001 0000	1111 0111
	2b: Rem < 0 ⟹ +Div, SLL Q, Q0 = 0	0000	0001 0000	0000 0111
	3: Shift Div right	0000	0000 1000	0000 0111
3	1: Rem = Rem – Div	0000	0000 1000	1111 1111
	2b: Rem < 0 ⟹ +Div, SLL Q, Q0 = 0	0000	0000 1000	0000 0111
	3: Shift Div right	0000	0000 0100	0000 0111
4	1: Rem = Rem – Div	0000	0000 0100	0000 0011
	2a: Rem ≥ 0 ⟹ SLL Q, Q0 = 1	0001	0000 0100	0000 0011
	3: Shift Div right	0001	0000 0010	0000 0011
5	1: Rem = Rem – Div	0001	0000 0010	0000 0001
	2a: Rem ≥ 0 ⟹ SLL Q, Q0 = 1	0011	0000 0010	0000 0001
	3: Shift Div right	0011	0000 0001	0000 0001

FIGURE 3.10 Division example using the algorithm in Figure 3.9. The bit examined to determine the next step is circled in color.

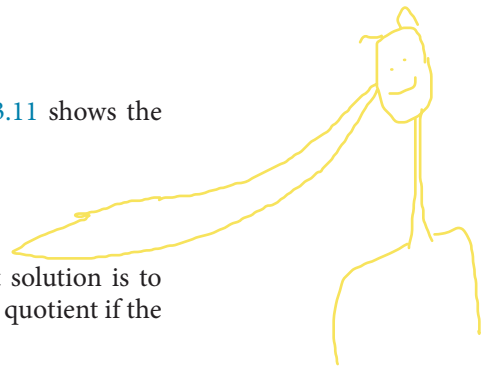

where there are unused portions of registers and adders. Figure 3.11 shows the revised hardware.

Signed Division

So far, we have ignored signed numbers in division. The simplest solution is to remember the signs of the divisor and dividend and then negate the quotient if the signs disagree.

Elaboration: The one complication of signed division is that we must also set the sign of the remainder. Remember that the following equation must always hold:

$$\text{Dividend} = \text{Quotient} \times \text{Divisor} + \text{Remainder}$$

To understand how to set the sign of the remainder, let's look at the example of dividing all the combinations of $\pm 7_{ten}$ by $\pm 2_{ten}$. The first case is easy:

$$+7 \div +2\text{: Quotient} = +3, + \text{Remainder} = +1$$

Checking the results:

$$+7 = 3 \times 2 + (+1) = 6 + 1$$

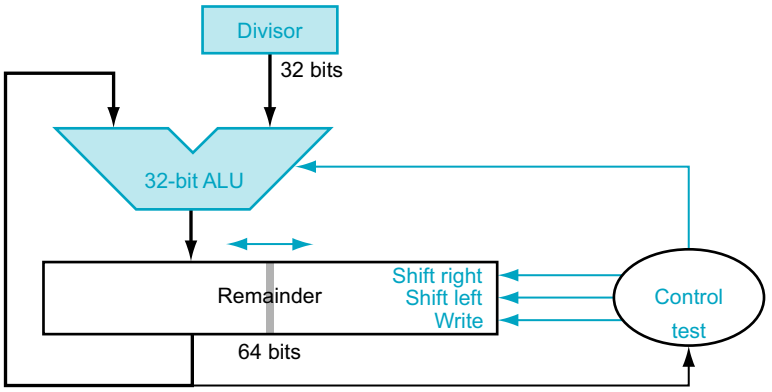

FIGURE 3.11 An improved version of the division hardware. The Divisor register, ALU, and Quotient register are all 32 bits wide. Compared to Figure 3.8, the ALU and Divisor registers are halved and the remainder is shifted left. This version also combines the Quotient register with the right half of the Remainder register. As in Figure 3.5, the Remainder register has grown to 65 bits to make sure the carry out of the adder is not lost.

If we change the sign of the dividend, the quotient must change as well:

$$-7 \div +2\text{: Quotient} = -3$$

Rewriting our basic formula to calculate the remainder:

$$\begin{aligned}\text{Remainder} &= (\text{Dividend} - \text{Quotient} \times \text{Divisor}) = -7 - (-3x + 2)\\ &= -7 - (-6) = -1\end{aligned}$$

So,

$$-7 \div +2\text{: Quotient} = -3,\ \text{Remainder} = -1$$

Checking the results again:

$$-7 = -3 \times 2 + (-1) = -6 - 1$$

The reason the answer isn't a quotient of −4 and a remainder of +1, which would also fit this formula, is that the absolute value of the quotient would then change depending on the sign of the dividend and the divisor! Clearly, if

$$- \quad \div y) \quad - \;) \div y$$

programming would be an even greater challenge. This anomalous behavior is avoided by following the rule that the dividend and remainder must have identical signs, no matter what the signs of the divisor and quotient.

We calculate the other combinations by following the same rule:

$$+7 \div -2\text{: Quotient} = -3,\ \text{Remainder} = +1$$
$$-7 \div -2\text{: Quotient} = +3,\ \text{Remainder} = -1$$

Thus, the correctly signed division algorithm negates the quotient if the signs of the operands are opposite and makes the sign of the nonzero remainder match the dividend.

Faster Division

Moore's Law applies to division hardware as well as multiplication, so we would like to be able to speed up division by throwing hardware at it. We used many adders to speed up multiply, but we cannot do the same trick for divide. The reason is that we need to know the sign of the difference before we can perform the next step of the algorithm, whereas with multiply we could calculate the 32 partial products immediately.

There are techniques to produce more than one bit of the quotient per step. The *SRT division* technique tries to **predict** several quotient bits per step, using a table lookup based on the upper bits of the dividend and remainder. It relies on subsequent steps to correct wrong predictions. A typical value today is 4 bits. The key is guessing the value to subtract. With binary division, there is only a single choice. These algorithms use 6 bits from the remainder and 4 bits from the divisor to index a table that determines the guess for each step.

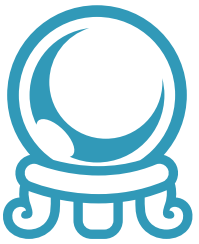

The accuracy of this fast method depends on having proper values in the lookup table. The *Fallacy* on page 239 in Section 3.8 shows what can happen if the table is incorrect.

Divide in RISC-V

You may have already observed that the same sequential hardware can be used for both multiply and divide in Figures 3.5 and 3.11. The only requirement is a 64-bit register that can shift left or right and a 32-bit ALU that adds or subtracts.

To handle both signed integers and unsigned integers, RISC-V has two instructions for division and two instructions for remainder: *divide* (`div`), *divide unsigned* (`divu`), *remainder* (`rem`), and *remainder unsigned* (`remu`).

Summary

The common hardware support for multiply and divide allows RISC-V to provide a single pair of 32-bit registers that are used both for multiply and divide. We accelerate division by predicting multiple quotient bits and then correcting mispredictions later. Figure 3.12 summarizes the enhancements to the RISC-V instruction set for the last two sections.

Hardware/ Software Interface

RISC-V divide instructions ignore overflow, so software must determine whether the quotient is too large. In addition to overflow, division can also result in an improper calculation: division by 0. Some computers distinguish these two anomalous events. RISC-V software must check the divisor to discover division by 0 as well as overflow.

Elaboration: An even faster sequential algorithm than Figure 3.9 does not immediately add the divisor back if the remainder is negative. It simply *adds* the dividend to the shifted remainder in the following step, since $(r + d) \times 2 - d = r - 2 + d \times 2 - d = r \times 2 + d$. This *nonrestoring* division algorithm, which takes one clock cycle per step, is explored further in the exercises; the algorithm in Figure 3.9 is called *restoring* division. A third algorithm that doesn't save the result of the subtract if it's negative is called a *nonperforming* division algorithm. It averages one-third fewer arithmetic operations.