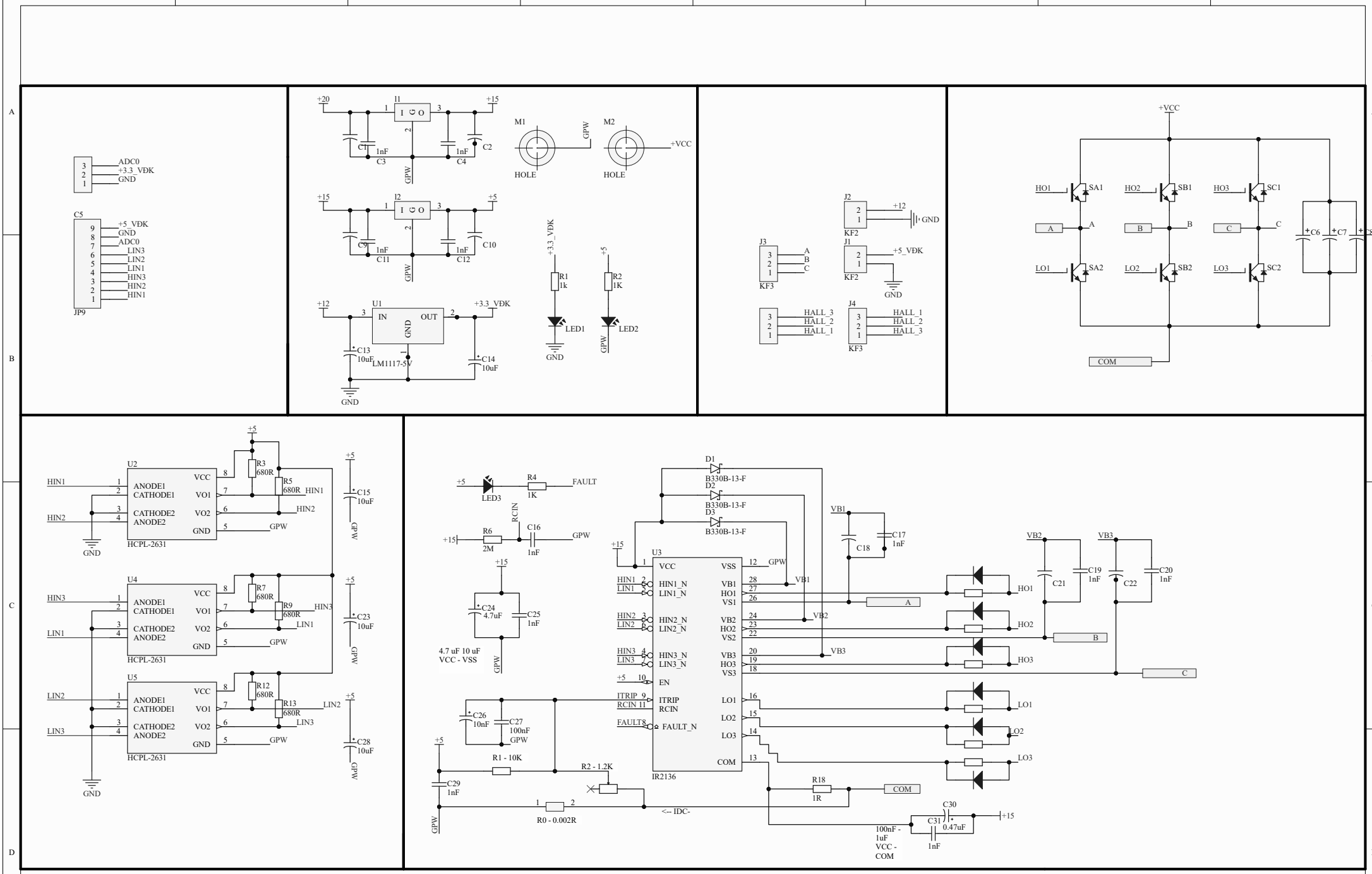

Title		
Size A3	Number	Revision
Date: 6/16/2023		Sheet of
File: D:\Altium \VFD_here\Sheet1.SchDoc		Drawn By: